AOC 2216Sw User's Manual

About This Guide

This guide describes the monitor's features, setup, and operation. **Information in this document is subject to change without notice.**

The sections are as follows:

- Safety Instructions: lists safety information.
- Setup: describes the initial setup process.
- Using the Monitor: gives an overview of how to use the monitor.
- Drivers: provides driver installation instructions for Windows.
- Technical Support : provides tips and solutions for common problems.
- Product Information: lists the technical specifications of the monitor.
- Warranty Statement: Warranty Statement used in Europe.

National Conventions

The following subsections describe notational conventions used in this document.

Notes, Cautions, and Warnings

Throughout this guide, blocks of text may be accompanied by an icon and printed in bold type or in italic type. These blocks are notes, cautions, and warnings, and they are used as follows:

NOTE: A NOTE indicates important information that helps you make better use of your computer system.

CAUTION: A CAUTION indicates either potential damage to hardware or loss of data and tells you how to avoid the problem.

WARNING: A WARNING indicates the potential for bodily harm and tells you how to avoid the problem.

Some warnings may appear in alternate formats and may be unaccompanied by an icon. In such cases, the specific presentation of the warning is mandated by regulatory authority.

Product Registration

Please link www.aoc.com, select your country or region, log in Product Registration to register.

FCC Notice

FCC Class B Radio Frequency Interference Statement WARNING: (FOR FCC CERTIFIED MODELS)

NOTE: This equipment has been tested and found to comply with the limits for a Class B digital device, pursuant to Part 15 of the FCC Rules. These limits are designed to provide reasonable protection against harmful interference in a residential installation. This equipment generates, uses and can radiate radio frequency energy, and if not installed and used in accordance with the instructions, may cause harmful interference to radio communications. However, there is no guarantee that interference will not occur in a particular installation. If this equipment does cause harmful interference to radio or television reception, which can be determined by turning the equipment off and on, the user is encouraged to try to correct the interference by one or more of the following measures:

1. Reorient or relocate the receiving antenna.
2. Increase the separation between the equipment and receiver.
3. Connect the equipment into an outlet on a circuit different from that to which the receiver is connected.
4. Consult the dealer or an experienced radio/TV technician for help.

NOTICE :

1. The changes or modifications not expressly approved by the party responsible for compliance could void the user's authority to operate the equipment.
2. Shielded interface cables and AC power cord, if any, must be used in order to comply with the emission limits.
3. The manufacturer is not responsible for any radio or TV interference caused by unauthorized modification to this equipment. It is theresponsibilities of the user to correct such interference.

WEEE Declaration

Disposal of Waste Equipment by Users in Private Household in the European Union.

This symbol on the product or on its packaging indicates that this product must not be disposed of with your other household waste.Instead, it is your responsibility to dispose of your waste equipment by handing it over to a designated collection point for the recycling of waste electrical and electronic equipment.The separate collection and recycling of your waste equipment at the time of disposal will help to conserve natural resources and ensure that it is recycled in a manner that protects human health and the environment. For more information about where you can drop off your waste equipment for recycling, please contact your local city office, your household waste disposal service or the shop where you purchased the product .

HG Declaration

SAFETY: Lamp Disposal

LAMP(S) INSIDE THIS PRODUCT CONTAIN MERCURY AND MUST BE RECYCLED OR DISPOSED OF ACCORDING TO LOCAL, STATE OR FEDERAL LAWS. FOR MORE INFORMATION, CONTACT THE ELECTRONIC INDUSTRIES ALLIANCE AT **WWW.EIAE.ORG**.

Precautions

WARNING: Use of controls, adjustments, or procedures other than those specified in this documentation may result in exposure to shock, electrical hazards, and/or mechanical hazards.

Read and follow these precautions when connecting and using your computer monitor:

PRECAUTIONS

- Do not use the monitor near water, e.g. near a bathtub, washbowl, kitchen sink, laundry tub, swimming pool or in a wet basement.

- Do not place the monitor on an unstable cart, stand, or table. If the monitor falls, it can injure a person and cause serious damage to the appliance. Use only a cart or stand recommended by the manufacturer or sold with the monitor. If you mount the monitor on a wall or shelf, use a mounting kit approved by the manufacturer and follow the kit instructions.
- Slots and openings in the back and bottom of the cabinet are provided for ventilation. To ensure reliable operation of the monitor and to protect it from overheating, be sure these openings are not blocked or covered. Do not place the monitor on a bed, sofa, rug, or similar surface. Do not place the monitor near or over a radiator or heat register. Do not place the monitor in a bookcase or cabinet unless proper ventilation is provided.
- The monitor should be operated only from the type of power source indicated on the label. If you are not sure of the type of power supplied to your home, consult your dealer or local power company.
- The monitor is equipped with a three-pronged grounded plug, a plug with a third (grounding) pin. This plug will fit only into a grounded power outlet as a safety feature. If your outlet does not accommodate the three-wire plug, have an electrician install the correct outlet, or use an adapter to ground the appliance safely. Do not defeat the safety purpose of the grounded plug.
- Unplug the unit during a lightning storm or when it will not be used for long periods of time. This will protect the monitor from damage due to power surges.
- Do not overload power strips and extension cords. Overloading can result in fire or electric shock.
- Never push any object into the slot on the monitor cabinet. It could short circuit parts causing a fire or electric shock. Never spill liquids on the monitor.
- Do not attempt to service the monitor yourself; opening or removing covers can expose you to dangerous voltages and other hazards. Please refer all servicing to qualified service personnel.
- To ensure satisfactory operation, use the monitor only with UL listed computers which have appropriate configured receptacles marked between 100 - 240V AC, Min. 5A.
- The wall socket shall be installed near the equipment and shall be easily accessible.
- For use only with the attached power adapter (Output 12Vdc) which have **UL,CSA** listed license(Only for monitors with power adapter).

Setup the stand and base

Please setup or remove the base following below steps.

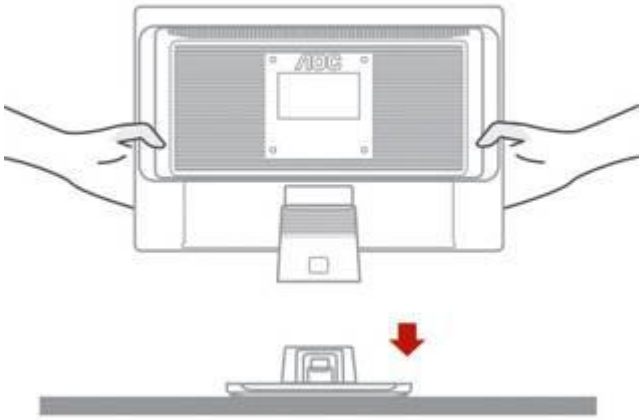

Adjusting Viewing Angle

- For optimal viewing it is recommended to look at the full face of the monitor, then adjust the monitor's angle to your own preference.
- Hold the stand so you do not topple the monitor when you change the monitor's angle.
- You are able to adjust the monitor's angle from -5°to 20°.

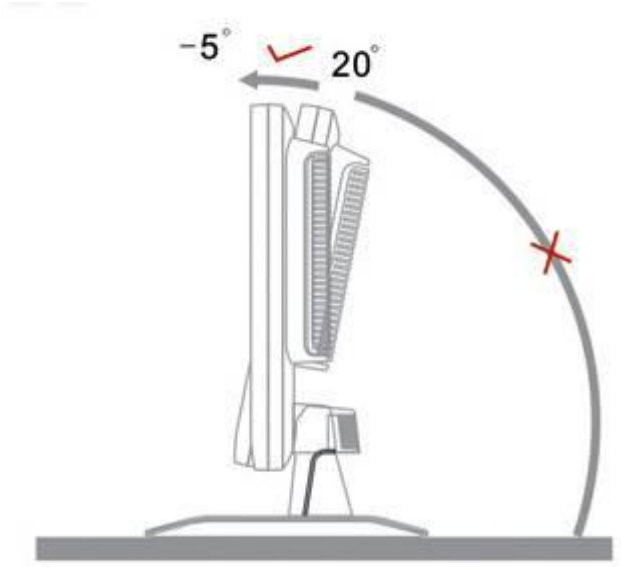

NOTE:
Do not touch the LCD screen when you change the angle. It may cause damage or break the LCD screen.

Attaching the Cables

Cable Connections On Back of Monitor and Computer

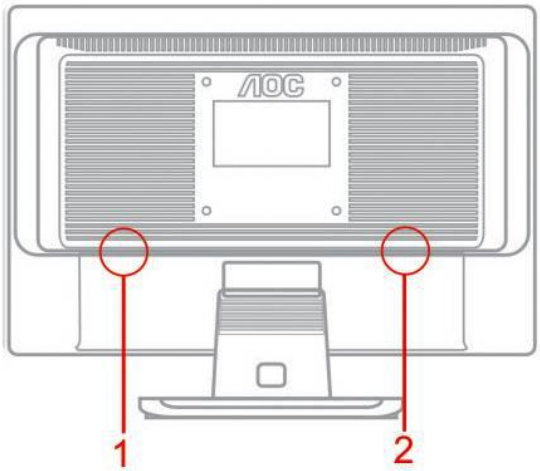

1.Power
2.Analog

Turn off your computer before performing the procedure below.

1. Connect the power cable to the AC port on the back of the monitor.
2. Connect one end of the 15-pin D-Sub cable to the back of the monitor and connect the other end to the computer's D-Sub port.
3. Turn on your monitor and computer.

If your monitor displays an image, installation is complete. If it does not display an image, see Troubleshooting.

Attaching Wall Mounting Arm

Preparing to Install An Optional Wall Mounting Arm

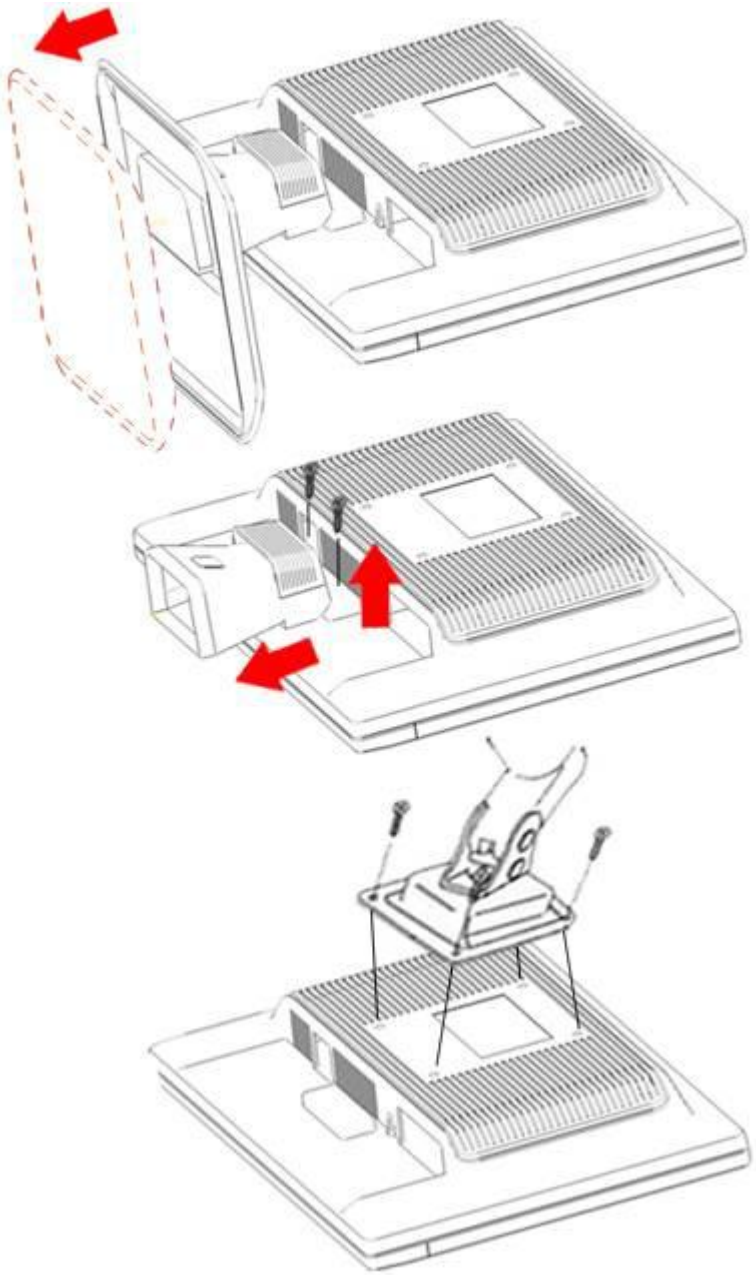

ii

This monitor can be attached to a wall mounting arm you purchase separately. Disconnect power before this procedure. Follow these steps:

1. Remove the base.
2. Follow the manufacturer's instructions to assemble the wall mounting arm.
3. Place the wall mounting arm onto the back of the monitor. Line up the holes of the arm with the holes in the back of the monitor.
4. Insert the 4 screws into the holes and tighten.
5. Reconnect the cables. Refer to the user's manual that came with the optional wall mounting arm for instructions on attaching it to the wall.

Noted : VESA mounting screw holes are not available for all models, please check with the dealer or official department of AOC.

Setting the Optimal Resolution

The recommended resolution for this monitor is 1680 by 1050. To setup the monitor to this resolution, follow the steps below.

1. Click **START**.
2. Click **SETTINGS**.
3. Click **CONTROL PANEL**.
4. Double click **DISPLAY**.
5. Click **SETTINGS**.
6. Set the resolution **SLIDE-BAR** to 1680 by 1050.

External Controls

Press the power button to turn the monitor on or off. The other control knobs are located at front panel of the monitor (See Figure). By changing these settings, the picture can be adjusted to your personal preferences.
* The power cord should be connected.
* Press the power button to turn on the monitor. The power indicator will light up.

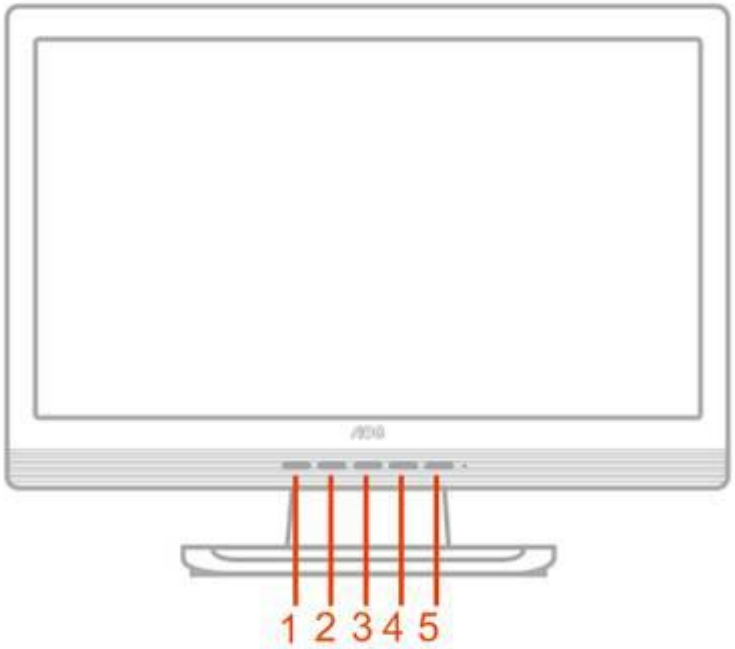

1. Auto Config
2. Eco Mode/ down
3. Up
4. Menu / Enter
5. Power Button & Indicator

OSD Settings

- Press the MENU-button to activate the OSD window.
- Press+ or - to navigate through the functions. Once the desired function is highlighted, press the MENU-buttonto activate it.If the function selected has a sub-menu, press or again to navigate through the sub-menu functions.Once the desired function is highlighted, press MENU-button to activate it.
- Press+ or - to change the settings of the selected function. To exit and save, select the exit function. If you want to adjust any other function, repeat steps 2-3.
- OSD Lock Function: To lock the OSD, press and hold the MENUbutton while the monitor is off and then press power button to turn the monitor on. To un-lock the OSD - press and hold the MENUbutton while the monitor is off and then press power button to turn the monitor on.
- Press Exit key continually for 7 sec. to turn on or off DDC-CI.

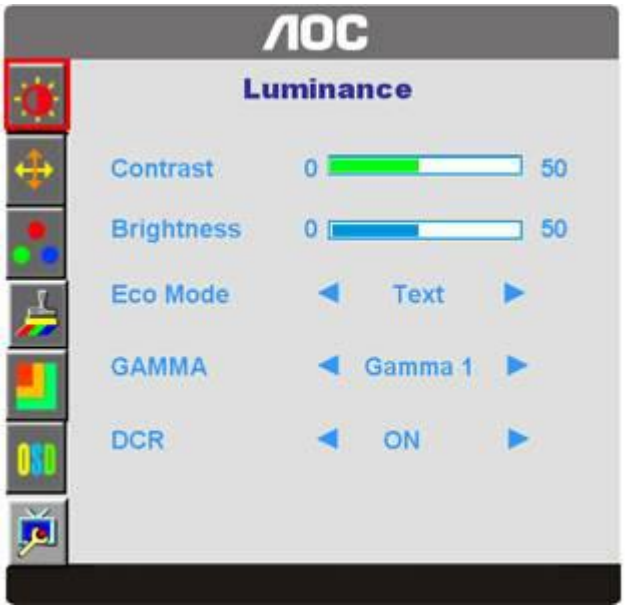

DCB Adjustment

Dynamic Color Boost

What is DCB?

Dynamic Color Boost (DCB) is an advanced color adjustment technology. Through analyzing RGB signals, DCB creates more vivid and natural images to suit various color environment needs. DCB has two types of color enhancers: “Color Boost” and “Picture Boost” .

DCC: Dynamic color control
ICM: Intelligent color management

1) How to use Color Boost?

YCM adjustment: In addition to the basic R (red), G (green), B (blue) color adjustments, Color Boost has added Y (yellow), C (cyanine), and M (magenta) for more color fine-tuning options. YCM adjustments are in the third icon labeled "Color Temperature "in the OSD menu. When adjusting YCM values, RGB values will also be changed automatically due to the color correlation between RGB and YCM.

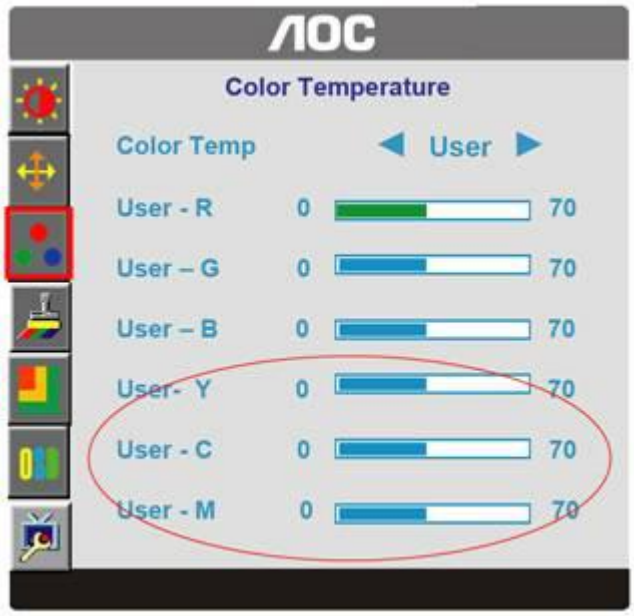

Five color-enhancement settings: To accommodate various display needs, Color Boost also offers 5 different color enhancement modes: Full Enhance, Natural Skin, Green Field, Sky Blue, and Auto-Detect. Please go to the fourth icon labeled "Color Boost" in the OSD menu and select one of the five settings you desire to be turned on.

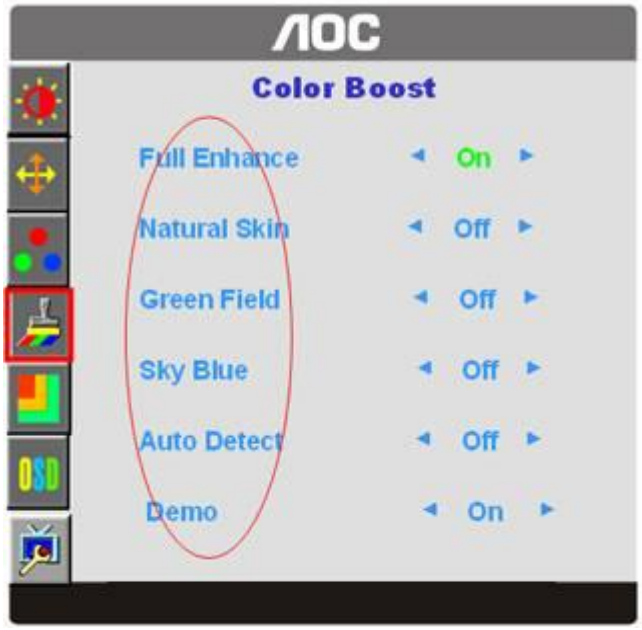

Full Enhance: When "Full Enhance" is turned on, the color saturation of the entire screen is fully enriched, thus all colors become more vibrant.

OFF ON

Nature Skin: When "Natural Skin" is turned on, the red and yellow colors are enriched automatically, thus presents human skin with more natural and truer colors. "Natural Skin" setting is ideal for viewing human portrait and detailed skin texture.

OFF ON

Green Field: When "Green Field" is turned on, the green color is enriched so that football field and mountain landscape would look more natural and fresh. “Green Field” setting is ideal for watching mountain scenery and outdoor sports.

Sky Blue: When"Sky Blue" is turned on, the color blue is being fine-tuned so that the sky or ocean landscape will look more vivid and in-depth. "Sky Blue" setting is ideal for viewing sky and ocean images.

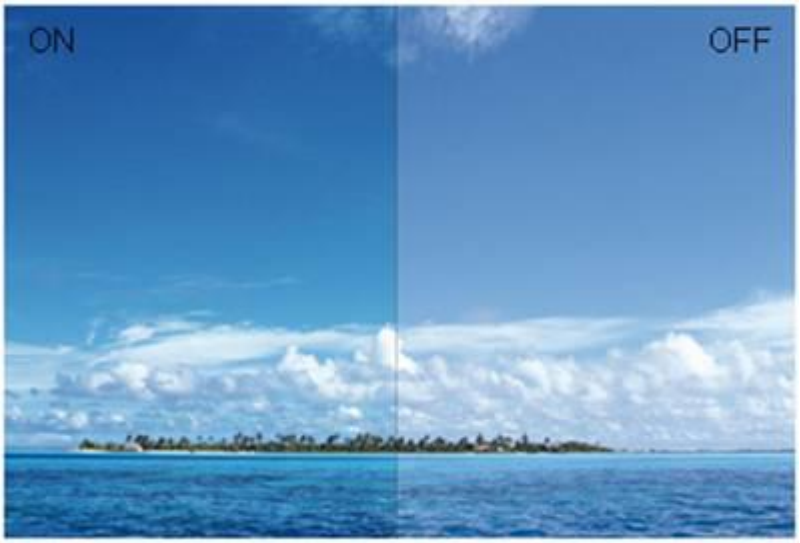

Auto Detect: When “Auto Detect” is turned on, every pigment will be detected and self-adjusted to render a lively picture.

Demo: Screen divided into two for demonstration purposes.

2) How to use Picture Boost?

Users can change the color settings of a self-selected zone on the screen. The size and position of the selected zone can also be adjusted. "Picture Boost" is located in the fifth icon labeled "Picture Boost" in the OSD menu. Turn on "Bright Frame" to select a zone on the screen to be enhanced. Please note when adjust or turn on any one of the DCB features, the rest of color settings including DCR will be disabled or return to default.

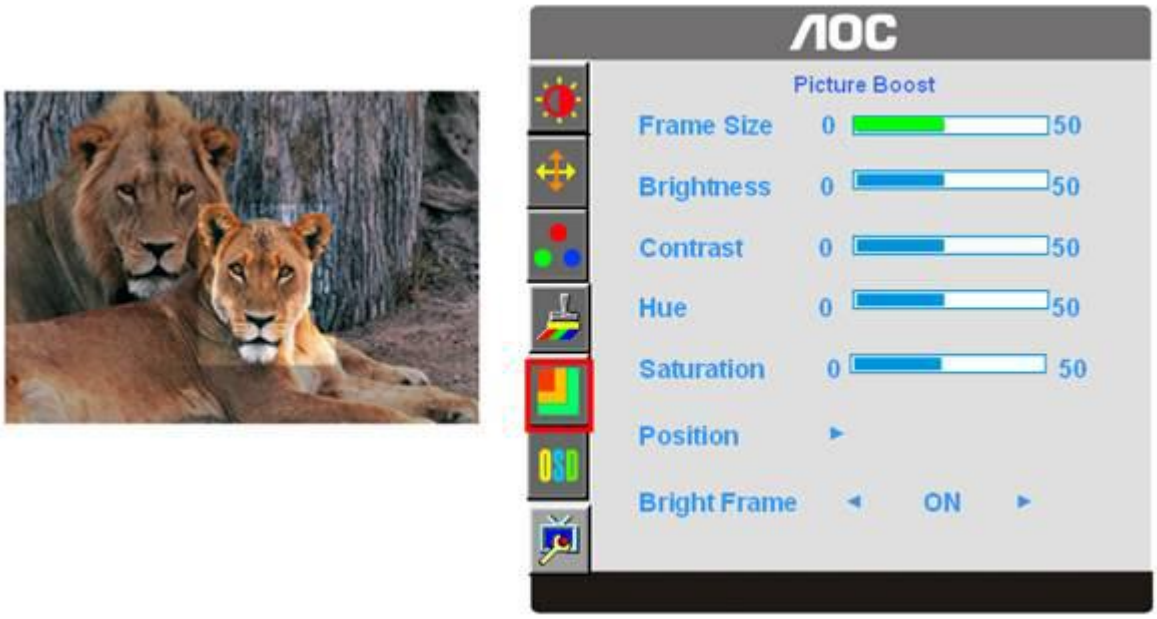

Disclaimer: *DCB aftereffects are subject to the resolution and quality of the display content, hence may look different than the above illustrations.*

DCR Adjustment

Dynamic Contrast Ratio

What is DCR?
Dynamic Contrast Ratio (DCR) auto adjusts the brightness of the screen so users can see the darker areas of the displayed content in more depths. By increasing the darkness of the dark areas and the brightness of the bright areas, contrast ratio is uplifted to exceed 2000:1. DCR value varies subject to the original CR values of the LCD module. The higher the original CR, the higher DCR can be achieved. DCR is great for watching movie or video contents.

How to Use DCR?
Go to the first OSD icon labeled "Luminance", turn on or off DCR as desires. DCR boosts the contrasts between lightness & darkness and enables the viewer to see more layers and details of the picture, especially in the darker areas. Please note when DCR is on, DCB will be disabled.

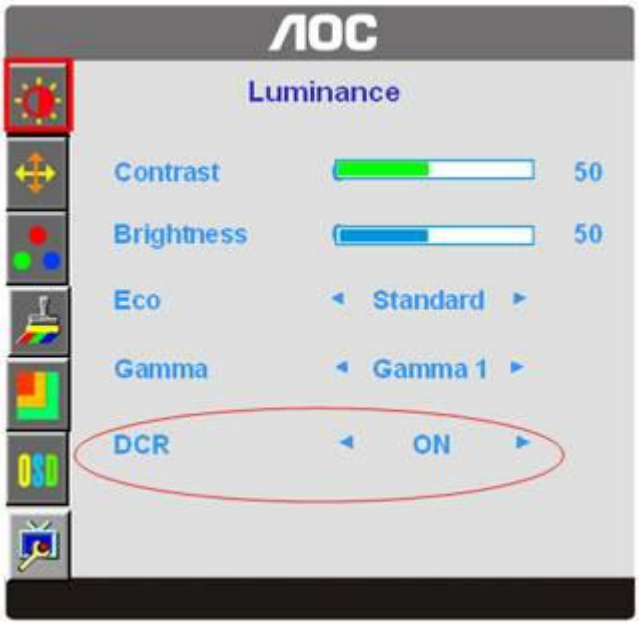

DCR Demos:

Disclaimer: *DCR aftereffects are subject to the resolution and quality of the display content, hence may look different than the above illustrations.*

Function Control Illustration

	Luminance	Adjust Range	Description
	Brightness	0-100	Backlight Adjustment
	Contrast	0-100	Contrast from Digital-register.
	Eco mode	Standard	Standard Mode
		Text	Text Mode
		Internet	Internet Mode
		Game	Game Mode
		Movie	Movie Mode
		Sports	Sports Mode
	Gamma	Gamma1	Adjust to Gamma1
		Gamma2	Adjust to Gamma 2
		Gamma3	Adjust to Gamma 3
	DCR	Off	Disable dynamic contrast ratio
		On	Enable dynamic contrast ratio
	Image Setup		
	Clock	0-100	Adjust picture Clock to reduce Vertical-Line noise.
	Focus	0-100	Adjust Picture Phase to reduce Horizontal-Line noise
	H.Position	0-100	Adjust the verticalposition of the picture.
	V.Position	0-100	Adjust the horizontal position of the picture.
	Color Temp.		
	Warm		Recall Warm Color Temperature from EEPROM.
	Normal		Recall Normal Color Temperature from EEPROM.
	Cool		Recall Cool Color Temperature from EEPROM.
	sRGB		Recall SRGB Color Temperature from EEPROM.
	User	User-B	Blue Gain from Digital-register
		User-G	Green Gain Digital-register.
		User-R	Red Gain from Digital-register
		User-Y	Yellow Gain from Digital-register
		User-C	Cyan Gain from Digital-register
		User-M	Magenta Gain from Digital-register
	Color Boost		
	Full Enhance	on or off	Disable or Enable Full Enhance Mode
	Nature Skin	on or off	Disable or Enable Nature Skin Mode
	Green Field	on or off	Disable or Enable Green Field Mode
	Sky-blue	on or off	Disable or Enable Sky-blue Mode
	AutoDetect	on or off	Disable or Enable AutoDetect Mode
	Demo	on or off	Disable or Enable Demo

	Picture Boost		
	Frame Size	0-14	Adjust Frame Size
	Brightness	0-100	Adjust Frame Brightness
	Contrast	0-100	Adjust Frame Contrast
	Hue	0-100	Adjust Frame Hue
	Saturation	0-100	Adjust Frame Saturation
	Position	H. position	Adjust Frame horizontal Position
		V.position	Adjust Frame vertical Position
	Bright Frame	on or off	Disable or Enable Bright Frame
	OSD Setup		
	H.Position	0-100	Adjust the verticalposition of OSD
	V.Position	0-100	Adjust the horizontal position of OSD
	Timeout	0-100	Adjust the OSD Timeout
	Language		Select the OSD language
	Extra		
	Auto Config	yes or no	Auto adjust the picture to default
	Reset	yes or no	Reset the menu to default
	EXIT/DDC-CI		Turn ON/OFF DDC-CI Support
	Information		Show the information of the main image and sub-image source

LED Indicators

Status	**LED Color**
Full Power Mode	Green
Active-off Mode	Orange

Specifications

LCD Panel	Model number	2216Sw
	Driving system	TFT Color LCD
	Viewable Image Size	548mm diagonal
	Pixel pitch	0.277mm(H) x 0.277mm(V)
	Video	R, G, B Analog Interface
	Separate Sync.	H/V TTL
	Display Color	16.7 million Colors
	Dot Clock	165 MHz
Resolution	Horizontal scan range	30 kHz - 80 KHz
	Horizontal scan Size(Maximum)	464.94mm
	Vertical scan range	55 Hz - 75 Hz
	Vertical scan Size(Maximum)	290.58mm
	Optimal preset resolution	1680 x 1050 (60 Hz)
	Highest preset resolution	1680 x 1050 (60 Hz)
	Plug & Play	VESA DDC2B/CI
	Input Connector	D-Sub 15pin
	Input Video Signal	Analog: 0.7Vp-p(standard), 75 OHM, Positive
	Power Source	100~240VAC, 47~63Hz
	Power Consumption	Active < 49W
		Standby < 2W
Physical Characteristics	Connector Type	15-pin Mini D-Sub
	Dimensions & Weight:	
	Height (with base)	398.6(404.6) mm
	Width	505.8 mm
	Depth	80.7 mm
	Weight (monitor only)	5 kg
	Weight (with packaging)	7 kg
Environmental	Temperature:	
	Operating	0° to 50°
	Non-Operating	-20°to 60°
	Humidity:	
	Operating	10% to 85% (non-condensing)
	Non-Operating	5% to 80% (non-condensing)
	Altitude:	
	Operating	0~ 3000m (0~ 10000 ft)
	Non-Operating	0~ 5000m (0~ 15000 ft)

EPA Energy STAR ®

ENERGY STAR® is a U.S. registered mark. As an ENERGY STAR® Partner, AOC International (Europe) GmbH has determined that this product meets the ENERGY STAR® guidelines for energy efficiency.

Preset Display Modes

STAND	RESOLUTION	HORIZONTAL FREQUENCY(kHZ)	VERTICAL FREQUENCY(Hz)
Dos-mode	720 x 400	31.469	70.0

VGA	640 x 480	31.469	60.0
VGA	640 x 480	37.861	72.0
VGA	640 x 480	37.500	75.0
SVGA	800 x 600	35.156	56.0
SVGA	800 x 600	37.879	60.0
SVGA	800 x 600	48.077	72.0
SVGA	800 x 600	46.875	75.0
XGA	1024 x 768	48.363	60.0
XGA	1024 x 768	56.476	70.0
XGA	1024 x 768	60.023	75.0
WXGA+	1440 x 900	55.935	60.0
WXGA+	1440 x 900	55.469	60.0
WSXGA	1680 x 1050	65.290	60.0
WSXGA	1680 x 1050	64.670	60.0

Pin Assignments

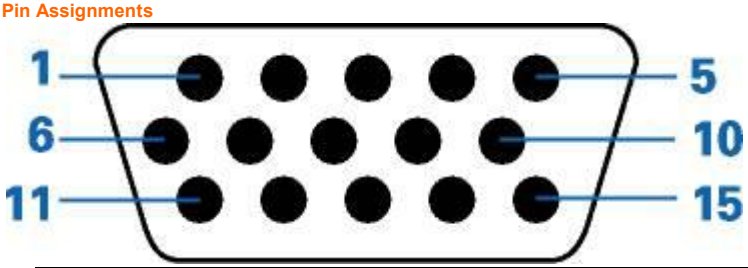

Pin Number	15-Pin Side of the Signal Cable
1	Video-Red
2	Video-Green
3	Video-Blue
4	N.C.
5	Ground
6	GND-R
7	GND-G
8	GND-B
9	+5V
10	Detect Cable
11	N.C.
12	DDC-Serial data
13	H-sync
14	V-sync
15	DDC-Serial clock

Plug and Play

Plug & Play DDC2B Feature

This monitor is equipped with VESA DDC2Bcapabilities according to the VESA DDC STANDARD. It allows the monitor to inform the host system of its identity and, depending on the level of DDC used, communicate additional information about its display capabilities.

The DDC2B is a bi-directional data channel based on the I^2C protocol. The host can request EDID information over the DDC2B channel.