LOIPART

Exclusive Sales of
Electrolux *Marine Equipment*

Washer-extractors, W3130/3180/3250N

Model W3180N

- SOLID MOUNT CONSTRUCTION WITH ROBUST FRAME IN GALVANIZED STEEL.
- LOW WATER CONSUMPTION UP TO 12 LITRE/KG DRY LINEN (60°C WITHOUT PRE-WASH). DEPENDING ON APPLICATION.
- CLASSIC CONTROL PROGRAM - ELECTROMECHANICAL TIMER WITH 5 OR 10 PROGRAMS.
- LARGE DOOR OPENING FOR EASY LOADING/UNLOADING.
- STAINLESS AND GALVANIZED STEEL IN ALL VITAL PARTS FOR HIGH DEGREE OF RUST PROTECTION.
- POWDER PAINTED CABINET.
- PREPARED FOR MANUAL OR AUTOMATIC DETERGENT SUPPLY.
- FRONT PANEL IN STAINLESS STEEL AND SIDE PANELS IN GREY COLOUR.

Connection to cold or cold and hot water. Available also with Exacta Control microprocessor with up to 28 fixed wash program combinations (some parameters programmable) or with Clarus Control fully programmable microprocessor, up to 192 programs. The machine must be bolted to foundation (foundation is not a part of Electrolux delivery).
For further specifications, please see overleaf.

LOIPART AB
P.O. Box 694
SE 441 18 Alingsås, Sweden
Phone +46 322 66 83 60
Telefax +46 322 63 77 47
E-mail loipart@loipart.se

19-013

DOC.NO. 19-013L
EDITION 2 08.01

WASHER-EXTRACTORS, W3130N, W3180N, W3250N

Scale 1:25
Dimensions mm

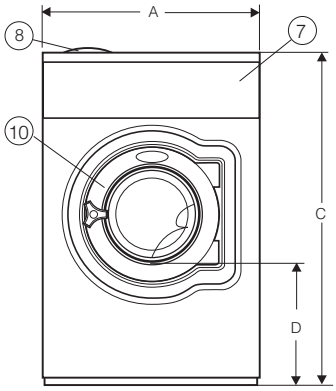

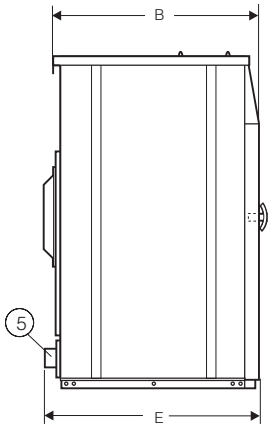

Positioning of machines:

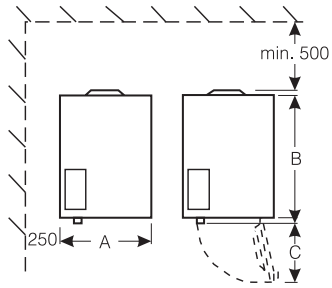

Installation of machine:

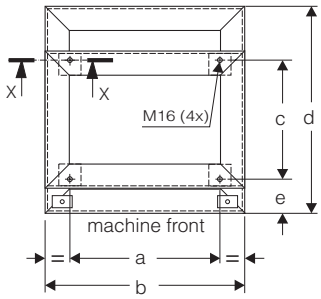

Section X-X:

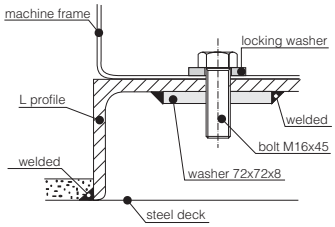

Model W3130N

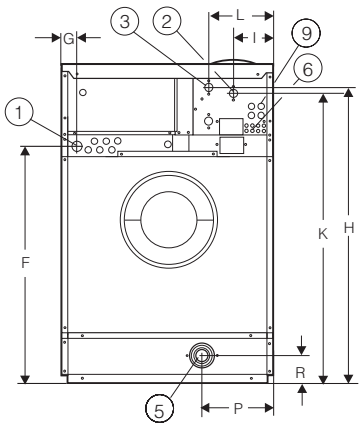

Model W3180N, W3250N

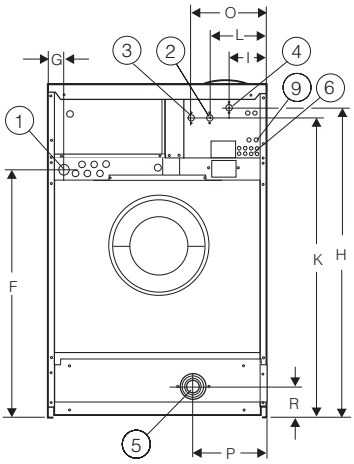

1. Electrical connection
2. Cold water connection R 3/4"
3. Hot water connection R 3/4"
4. Alternative water connection R 3/4"
5. Drain Ø 75 mm
6. Liquid supply connections
7. Control panel
8. Soap box
9. Connections for water re-use
10. Door opening
    Ø 395 (W3130N),
    Ø 435 (W3180N, W3250N)

Positioning and installation of machine - dimensions mm

Type	A	B	C	a	b	c	d	e
W3130N	720	790	445	575	720	495	783	117.5
W3180N	750	880	485	636.5	750	569.5	875	122
W3250N	830	995		716	830	636	950	126

Dimensions mm

Model/Type	A	B	C	D	E	F	G	H	I	K	L	O	P	R
W3130N	720	790	1200	365	825	910	45	1115	130	1095	215	-	235	100
W3180N	750	880	1325	435	915	1035		1245	160	1225	245	335	225	
W3250N	830	995	1410	495	990	1120		1330		1290			265	

Specification

Model/Type	Capacity, kg filling factor 1:10/1:13	Innerdrum			Voltage V*	Loading kW	Fuse A	Weight kgs		Shipping volume m³
		volume litres	diameter mm	extraction rpm				net	gross	
W3130N	13/10	130	595	494	400 3~50 440 3~60	11	32	175	190	0.890
W3180N	18/13,8	180	650	471		16		228	245	1.140
W3250N	25/19	250	725	446		21	40	287	305	1.490

* other voltages available upon request

Specification

Model/Type	G-factor	Max floor load at extraction kN	Frequency of the dynamic force Hz	Airborne sound level dB(A)
W3130N	81	1.7±4.1	8.7	68
W3180N		2.8±5.3	7.9	80
W3250N		2.2±4.7	8.3	

Consumption data for program "Normal" 60°, 1:10

Model/Type	Total time minutes	Water consumption litres	Energy consumption kWh*
		cold/hot	motor/heating
W3130N	44	122/25	0.15/0.55
W3180N	43	183/32	0.2/0.75
W3250N	45	266/46	0.55/1.75

* water temperature: cold water15°C, hot water 65°C

19-013

Subject to changes without notice.