Service manual

Washer extractors

W465H–W4300H, W475S–W4330S, W475N–W4330N

Type W3...

Compass Control

From machine No.

W475N/S, W485N/S, W4105N/S, W4130N/S	**00521/402183-**
W4180N/S	**00650/107384-**
W4250N/S	**00725/105494-**
W4330N/S	**00795/102510-**

Thinking of you

Electrolux

Service manual in original language

438 9228-61/EN
2011.08.25

Contents

Safety precautions 5
Technical data 7
Machine presentation 13
Description 13
Function 14
Program unit 16
Motor and motor control 17
Door lock 18
Heating 19
Water connections 19
Rear electric module 19
Detergent compartment 20
Drain valve 20
Frame and suspension 20
Program unit 21
Description 21
Menu tree 23
Activating servicemode 24
Service program 28
Config 1 37
Activate wash program 53
I/O modules 55
General 55
Function options via the service program 56
Function options via program designation 57
Function options for Type 1 and Type 2 I/O modules 58
Replacing of I/O module 59
External connections to I/O module type 2 60
Circuit diagram of function options for I/O module type 2 63
Machines with I/O module type 3 70
Addressing I/O modules 71
Door and door lock 73
Description 73
Function 74
Repairs 76
Motor and motor control 79
Warnings 79
Description 80
Function 82
LED indications 86
Repairs 87
Adjustments 88

Contents

Drain valve 89
Description 89
Function 90
Repairs 91
Detergent compartment 93
Description 93
Heating 95
Description 95
Function 96
Repairs 98
Payment systems 99
Abbreviations 101
Preventive maintenance 103
Trouble shooting 105
General information on troubleshooting 105
Error code 106
Activating servicemode 109
Description of error codes and causes 113

The manufacturer reserves the right to make changes to design and component specifications.

Safety Precautions

The machine is only intended for water-wash use.

Do not allow minors to use the machine.

Do not hose down the machine with water.

The machine's door lock must under no circumstances be bypassed.

If the machine develops a fault, this must be reported to the person in charge as soon as possible. This is important both for your safety and that of others.

The machine is not intended to be used by people (including minors) with reduced physical or mental capacity or lack of experience and knowledge. Such people must be instructed in the use of the machine by a person who has responsibility for their safety. Minors must be supervised to ensure that they do not play with the machine.

All external equipment which is connected to the machine must be CE/EMC-approved and connected using an approved shielded cable.

In order to prevent damage to the electronics (and other parts) that may occur as the result of condensation, the machine should be placed in room temperature for 24 hours before being used for the first time.

Technical data

		W465H	W475H	W4105H	W4130H	W4180H	W4240H	W4300H
Innerdrum								
volume	litres	65	75	105	130	180	240	300
diameter	mm	520	520	595	650	725	795	795
Drum speed								
wash		49	49	49	49	44	42	42
extraction	rpm	1100	1100	1025	980	930	890	820
Heating								
electricity	kW	5.4/5.6/7.5	5.4/5.6/7.5	5.6/7.5/10	13	18	23	23
steam		x	x	x	x	x	x	x
hot water		x	x	x	x	x	x	x
G-factor		350	350	350	350	350	350	300
Weight, net	kg	144	159	201	267	350	400	509

Connections

	W465H	W475H	W4105H	W4130H	W4180H	W4240H	W4300H
Water valves connection BSP	DN20 3/4"	DN20 3/4"	DN20 3/4"	DN20 3/4"	DN20 3/4"	DN20 3/4"	DN20 3/4"
Rec. water pressure kPa	200-600	200-600	200-600	200-600	200-600	200-600	200-600
Functioning limits for water valve kPa	50-1000	50-1000	50-1000	50-1000	50-1000	50-1000	50-1000
Capacity at 300 kPa l/min	20	20	20	20	30	60	60
Drain valve outer Ø mm	50/75	50/75	50/75	75	75	75	75
Draining capacity l/min	170	170	170	170	170	170	170
Steam valve connection BSP	DN15 1/2"	DN15 1/2"	DN15 1/2"	DN15 1/2"	DN15 1/2"	DN15 1/2"	DN15 1/2"
Rec. steam pressure kPa	300-600	300-600	300-600	300-600	300-600	300-600	300-600
Functioning limits for steam valve kPa	50-800	50-800	50-800	50-800	50-800	50-800	50-800

Technical data

	W475N/S	W485N/S	W4105N/S	W4130N/S	W4180N/S	W4250N/S	W4330N/S
Innerdrum							
volume litres	75	85	105	130	180	250	330
diameter mm	520	520	595	595	650	725	795
Drum speed							
wash	49	49	49	49	44	44	42
extraction rpm	587/830	587/830	548/776	548/776	525/742	497/702	474/671
Heating	2.0/3.0/	2.0/3.0/	3.0/5.6/	3.0/	4.8/9.3		
electricity kW	5.4/5.6/7.5	5.4/5.6/7.5	6.5/7.5/10	7.5/10	13	18	23
steam	x	x	x	x	x	x	x
hot water	x	x	x	x	x	x	x
G-factor	100/200	100/200	100/200	100/200	100/200	100/200	100/200
Weight, net kg	129	135	145	175	228	287	330

Connections

	W475N/S	W485N/S	W4105N/S	W4130N/S	W4180N/S	W4250N/S	W4330N/S
Water valves connection BSP	DN20 3/4"	DN20 3/4"	DN20 3/4"	DN20 3/4"	DN20 3/4"	DN20 3/4"	DN20 3/4"
Rec. water pressure kPa	200-600	200-600	200-600	200-600	200-600	200-600	200-600
Functioning limits for water valve kPa	50-1000	50-1000	50-1000	50-1000	50-1000	50-1000	50-1000
Capacity at 300 kPa l/min	20	20	20	20	30	60	60
Drain valve outer Ø mm	75	75	75	75	75	75	75
Draining capacity l/min	170	170	170	170	170	170	170
Steam valve connection BSP	DN15 1/2"	DN15 1/2"	DN15 1/2"	DN15 1/2"	DN15 1/2"	DN15 1/2"	DN15 1/2"
Rec. steam pressure kPa	300-600	300-600	300-600	300-600	300-600	300-600	300-600
Functioning limits for steam valve kPa	50-800	50-800	50-800	50-800	50-800	50-800	50-800

1	Electrical connection
2	Cold water
3	Hot water
4	Hard water
5	Steam connection
6	Drain
7	Liquid detergent supply
8	Control panel
9	Soap box
10	Door opening, W465H, W475H: ø 310, W4105H: ø 365, W4130H: ø 395, W4180H, W4240H, W4300H: ø 435

	A	B	C	D	E	F	G	H	I	K	L	M	N	O	P	R	S
W465H	720	690	1115	355	720	825	45	1030	220	1010	135	910	830	360	100	240	–
W475H	720	690	1115	355	720	825	45	1030	220	1010	135	910	830	360	100	240	–
W4105H	830	705	1200	365	740	910	45	1115	220	1095	135	995	910	415	100	295	–
W4130H	910	785	1325	435	825	1035	125	1245	215	1225	300	1125	–	–	100	305	455
W4180H	970	870	1410	470	910	1120	115	1330	230	1290	315	1205	370	410	100	335	485
W4240H	1020	915	1445	500	955	1155	100	1360	215	1320	300	1240	350	360	100	360	510
W4300H	1020	1060	1445	500	1135	1155	100	1360	215	1320	300	380	–	–	100	360	330

W465H, W475H, W4105H, W4130H

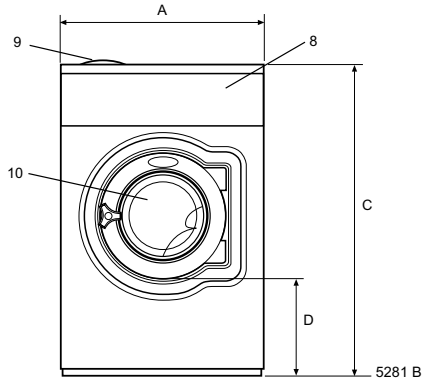

Front

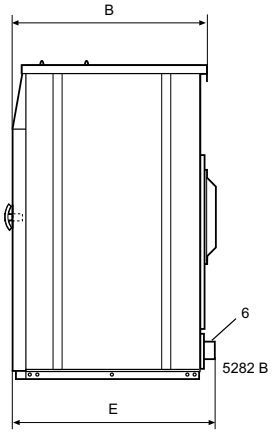

Right side

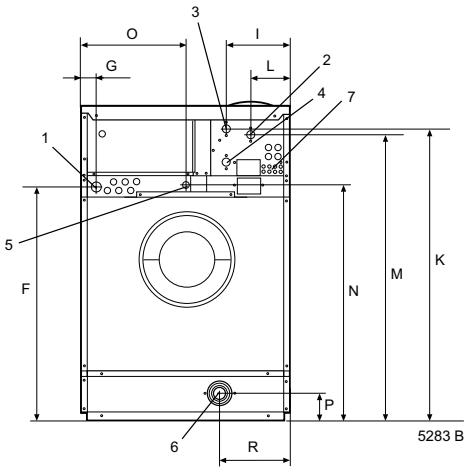

Rear side

W4180H, W4240H, W4300H

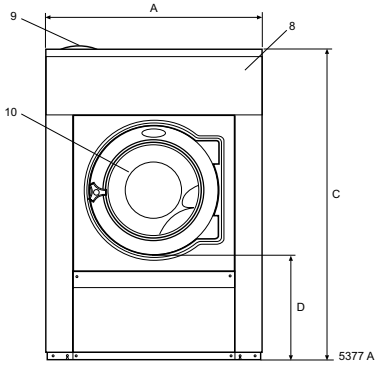

Front

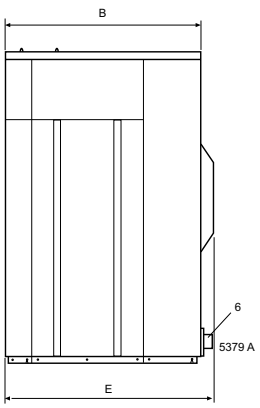

Right side

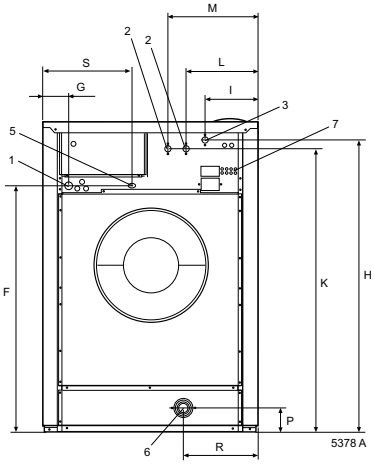

Rear side

Technical data

1	Electrical connection
2	Cold water
3	Hot water
4	Steam connection
5	Drain
6	Liquid detergent supply
7	Control panel
8	Soap box
9	Water reuse
10	Door opening, W475N/S, W485N/S: ø310, W4105N/S, W4130N/S: ø365, W4180N/S: ø395, W4250N/S, W4330N/S: ø435

	A	B	C	D	E	F	G	H	I	K	L	M	N	O	P	R
W475N/S	660	690	1115	355	725	825	45	1030	215	1010	130	830	385	-	100	225
W485N/S	660	730	1115	355	765	825	45	1030	215	1010	130	830	385	-	100	225
W4105N/S	720	705	1200	365	740	910	45	1115	215	1095	130	910	420	-	100	235
W4130N/S	720	790	1200	365	825	910	45	1115	215	1095	130	910	420	-	100	235
W4180N/S	750	880	1333	435	915	1035	45	1245	130	1225	210	1040	325	295	100	225
W4250N/S	830	955	1410	470	990	1120	45	1330	160	1290	245	1125	325	325	100	265
W4330N/S	910	1040	1445	500	1075	1155	45	1365	160	1325	245	1155	280	325	100	210

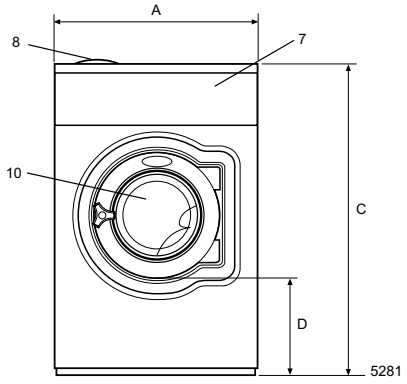

Front

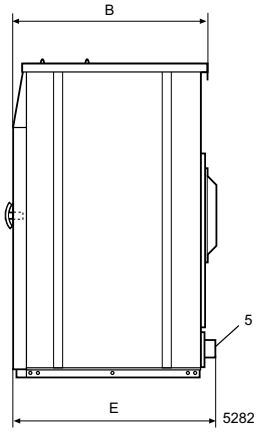

Right side

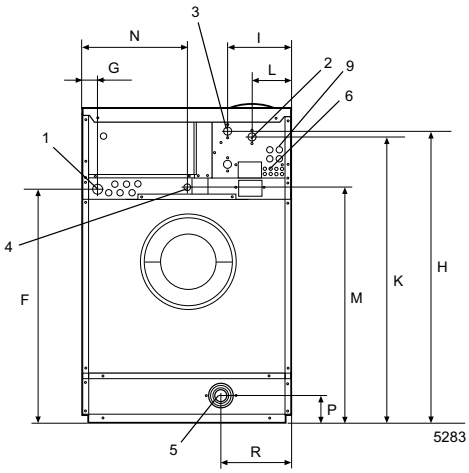

Rear side **W475N/S-W4130N/S**

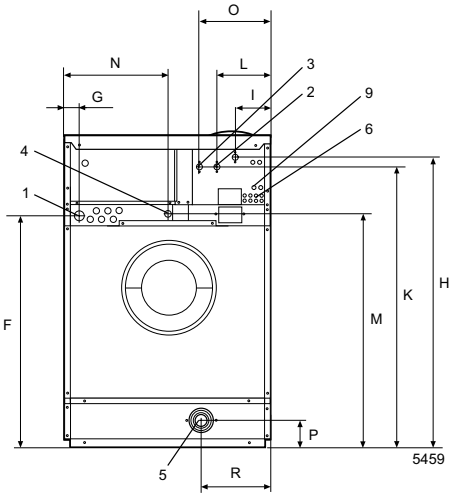

Rear side **W4180N/S-W4330N/S**

	W465H	W475H	W4105H	W4130H	W4180H	W4240H	W4300H
Frequency of the dynamic force Hz	18.3	18.3	17.1	16.3	15.5	14.8	13.7
Floor load at max extraction kN	1.8 ± 0.5	1.9 ± 0.5	2.5 ± 0.5	3.1 ± 0.5	4.2 ± 1.0	5.2 ± 1.0	6.2 ± 1.3

	W475N/S	W485N/S	W4105N/S	W4130N/S	W4180N/S	W4250N/S	W4330N/S
Frequency of the dynamic force Hz	9.8/13.8	9.3/13.8	9.1/12.9	9.1/12.9	8.8/12.4	8.3/11.7	7.9/11.2
Floor load at max extraction kN	1.6 ± 1.9/ 1.6 ± 2.4	1.7 ± 3.1/ 1.7 ± 2.6	1.9 ± 2.5/ 1.9 ± 3.0	2.4 ± 3.1/ 2.3 ± 3.8	2.9 ± 3.9/ 3.0 ± 4.8	3.8 ± 4.9/ 3.8 ± 5.9	4.6 ± 5.6/ 4.3 ± 6.9

Machine presentation

Description

(1) The machines covered in this service manual include the following models:

Drum volume (litres)	Model name
65	W465H
75	W475H/S/N
85	W485S/N
105	W4105H/S/N
130	W4130H/S/N
180	W4180H/S/N
240	W4240H
250	W4250S/N
300	W4300H
330	W4330S/N

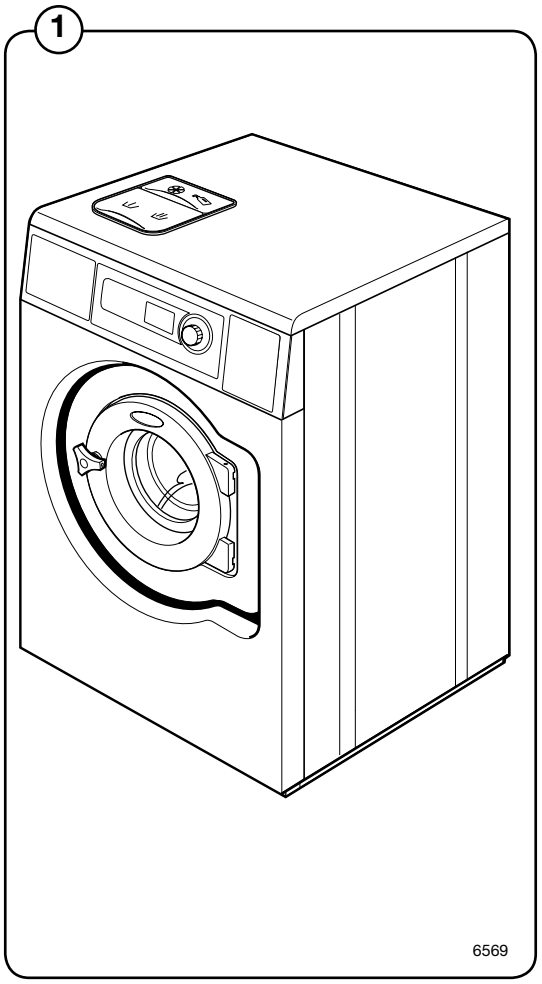

The machines feature an electronic programme unit with fixed washing programmes that may be changed using optional accessories. The programme unit also has an in-built self-diagnosis programme, which increases the possibilities for quick troubleshooting.

The motor is frequency-controlled and is controlled by an advanced motor control. This allows precise and flexible control of the motor rpm for any application.

The machines are supplied to customer specifications with e.g. electric or steam heating or no heating, and may be connected to various combinations of cold, warm and hard water.

Function

(2) This section presents a general overview of the functions of the machine. Most functions are then presented in detailed in separate chapters later on in this service manual.

The machine is freely suspended, which means the outer drum and motor are mounted on a supporting ”cradle” that rests on four shock absorbers for dampening the imbalance in the machine.

The washer drum (inner drum) is belt driven by a motor. This motor is located at the bottom of the machine and is mounted on the cradle with a belt tensioner. The inner drum is mounted to the outer drum at the rear plate with two bearings sealed against leakage with sealing rings.

The drain valve is a water-controlled diaphragm valve alternatively, an electrical drain valve or drain pump.

The door is of sturdy type that is interlocked with a lock module when in operation.

The control panel contains a program knob for selecting the fixed wash programs and a display.

The program unit is mounted inside the control panel. Contactor, water valves, etc., are located at the back of the machine.

2

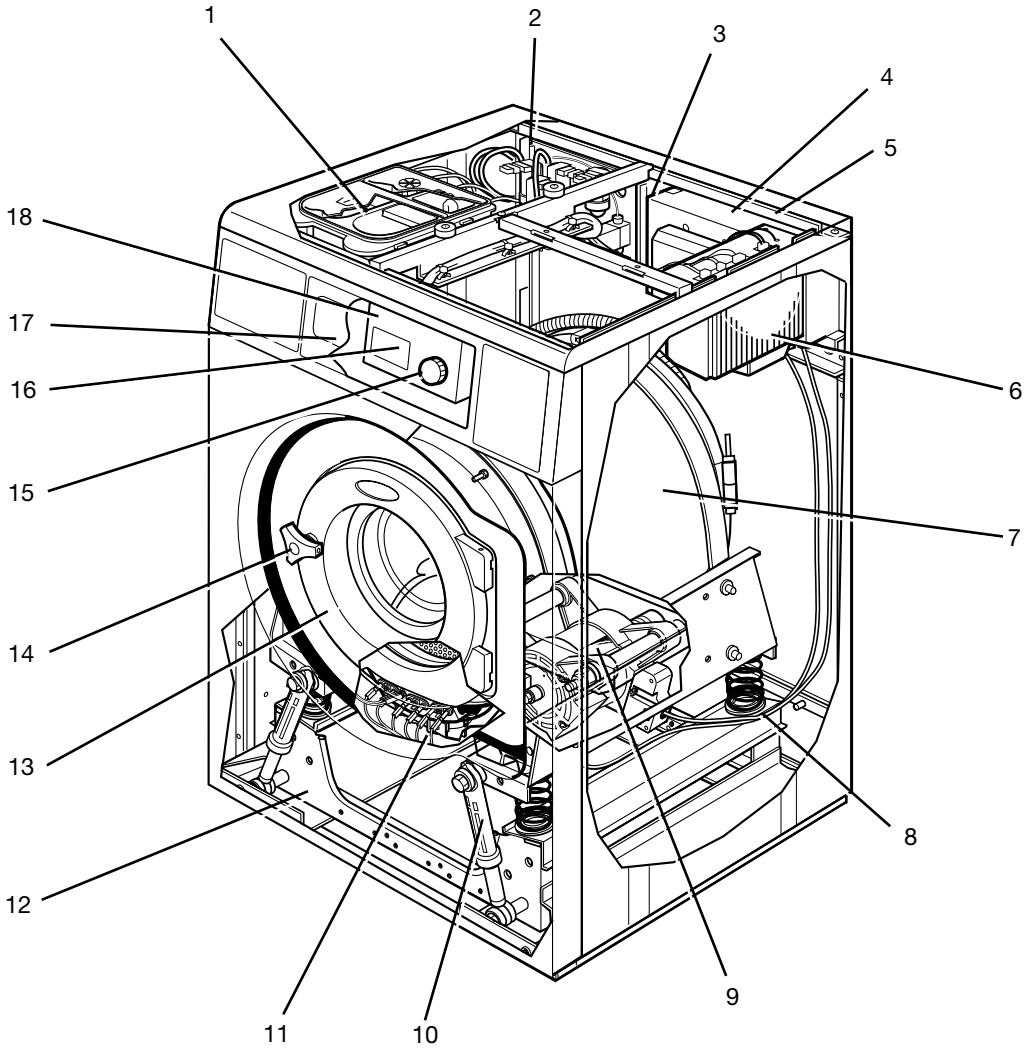

1. Detergent drawer
2. Water inlet valves
3. Power supply
4. I/O-board
5. Rear electrical module
6. Motor control
7. Outer drum
8. Coil spring (not S- and N-model)
9. Motor
10. Shock absorber (not S- and N-model)
11. Drain valve
12. Support
13. Door
14. Door lock
15. Program knob
16. Display
17. Control panel
18. Program unit

H - model shown

6562

Program unit

(3) The control panel contains a program knob and a display. The panel can also be equipped with two preset buttons.

The control panel and display are used by:

- the user to select the machine's fixed wash programs, to select up to two options for each wash program and for information on the wash process and any fault indicators.
- service personnel for navigation and control of the program unit's service program.
- programming personnel for setting and program adjustment in the program unit's software.

(4) If present, the preset buttons are used for direct start of two preset wash programs.

Using information on torque values from the motor, the weight of each wash is measured before each wash program in order to adapt the amount of water used for washing.

The program unit controls the water valves, drain valve and heating via an I/O board in the rear electrical module. Control signals to external units, such as detergent pumps or external water valves can also be engaged here.

3

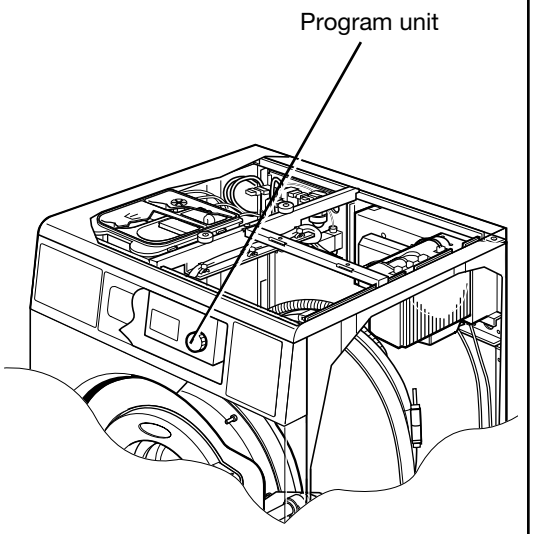

4

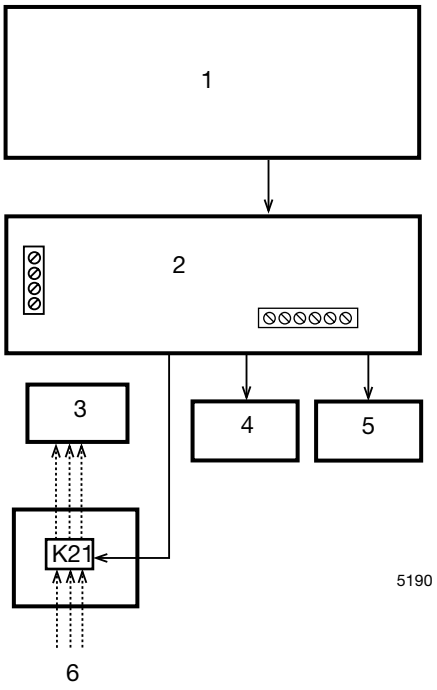

1. Program unit A1
2. I/O-board A11,
   Outputs for water, detergent and drain.
3. Heater element

4 Water valves

5. Drain valve
6. Power supply

Motor and motor control

(5) The washer drum (inner drum) is belt driven by a frequency controlled motor. The motor is located on a motor shelf under the outer drum and has been arranged with a belt tensioner.

(6) Motor control is microprocessor controlled and can control the acceleration of the drum, its rpm and its retardation very precisely.

Motor control communicates with the program unit through a serial interface.

The motor control is voltage-fed over a cable which includes two fuses.

The machine's motor and motor control are described in more detail in the section **Motor.**

5

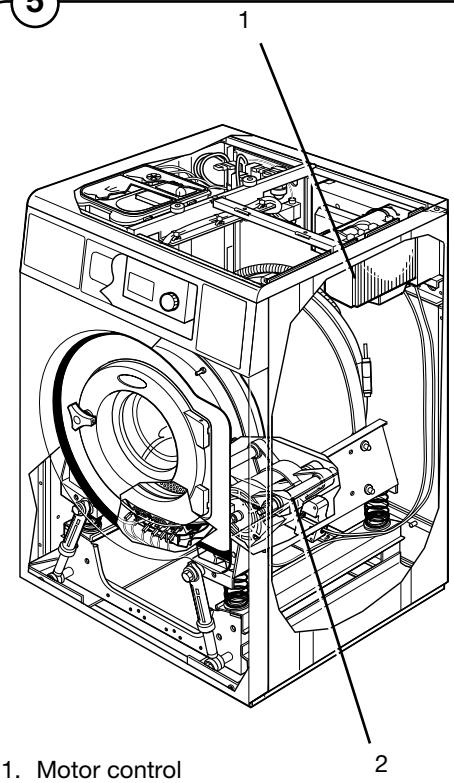

1. Motor control
2. Motor

H - model shown

6211

6

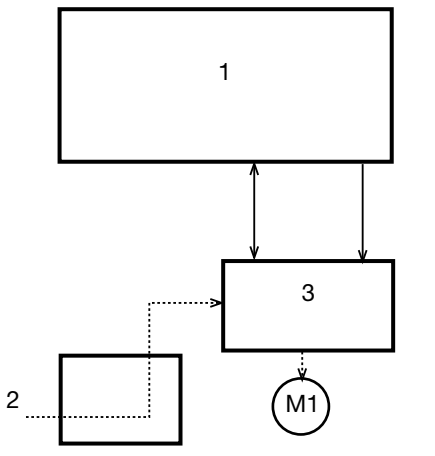

5189

1. Program unit A1
2. Power supply
3. Motor control U1

Door lock

(7) The door lock is electromechanical with twin safety breakers. The lock is bi-stable, i.e. the lock must be given an active signal from the program unit to lock as well as unlock the door.

(8) A separate circuit integrated in the program unit checks and controls the locking and unlocking of the door through a lock module. The circuit has separate controls that the drum is empty and that it is stationary. Through sensors in the lock module, the circuit checks the door's closed and locked position. Together with other controls the program unit conducts, this will guarantee the door cannot be opened by mistake.

The machine's door and door lock are described in more detail in the section **Door and door lock.**

7

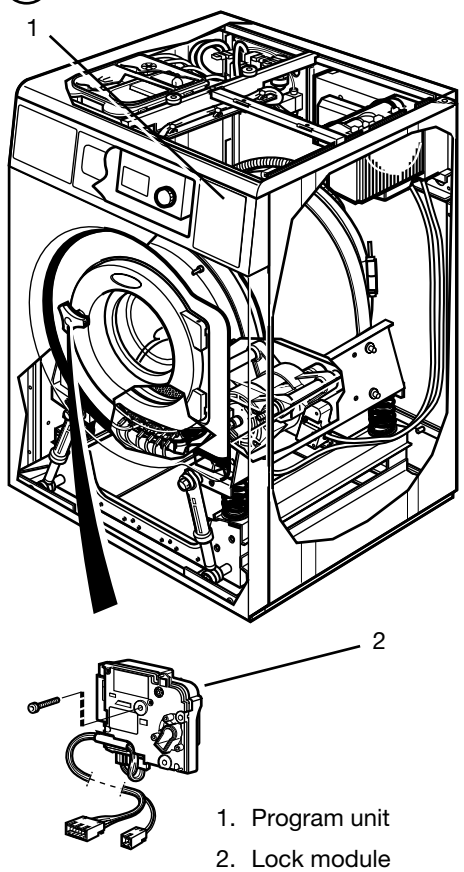

1. Program unit
2. Lock module

6568

8

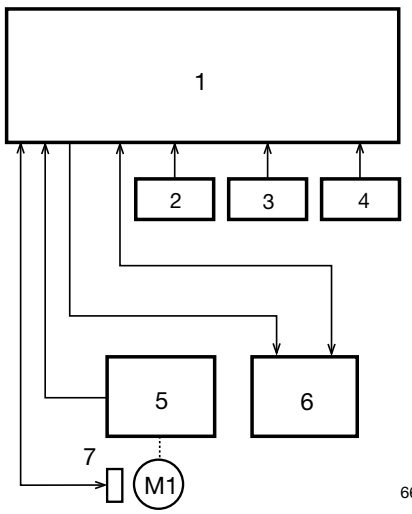

6658

1. Program unit A1
2. Temperature sensor B1
3. Level switch B2
4. Level switch B4
5. Motor control U1
6. Lock module A111
7. Rotation sensor B3

Heating

(9) Electric heating heats the washing water with three elements accessible from the front of the machine.

The machine's heating system is described more thoroughly in the section **Heating.**

Water connections

(9) The machine can have one, two, three or four water inlet valves depending on the machine size and customer requirements.

In this unit there are also eight connections for an external detergent feeder.

Rear electric module

(10) Contains the main switch or terminal block for incoming power, heating contactor, I/O board with outputs for controlling the machine's water and drain valves and heating. Some machines have an additional I/O board with terminal blocks for connecting e.g. external detergent feeder.

9

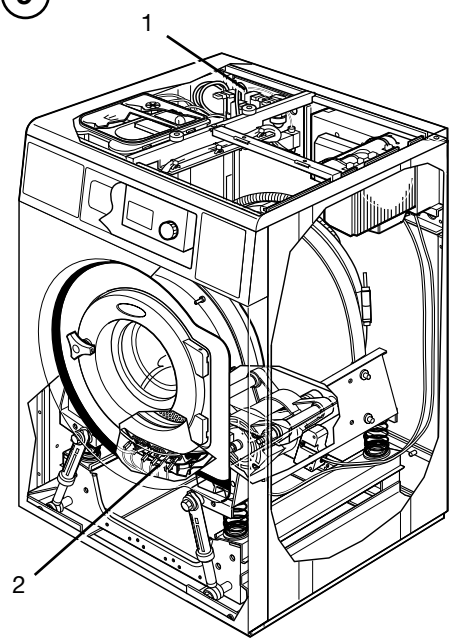

1. Water connections
2. Heating element

6562

10

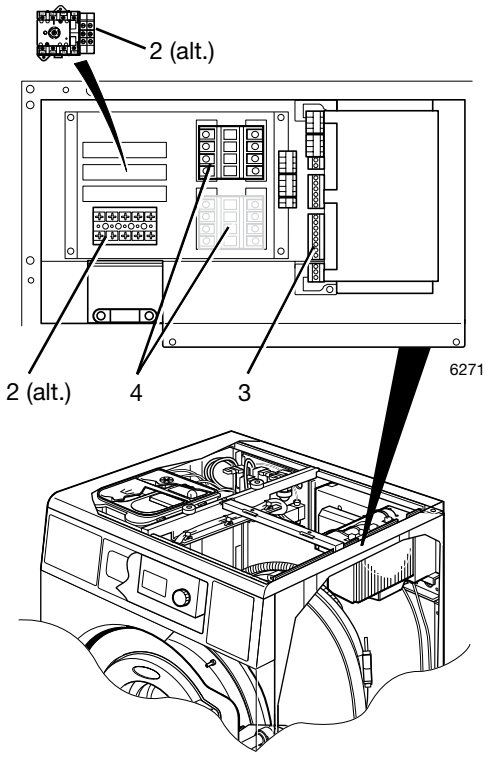

1. Rear electric module
2. Power supply connection
3. Distribution board, I/O board 2
4. Contactor K21 (Heat)

6281

Detergent compartment

(11) The detergent compartment has four compartments for prewash, main wash, rinse and bleaching agent/liquid detergent.

The machine's detergent compartment is described more thoroughly in the section **Detergent compartment.**

Drain valve

(11) The valve is a diaphragm valve that is opened and closed through water pressure. The control valve is mounted by the water valves.

The machine's drain valve is described more thoroughly in the section **Drain valve.**

Frame and suspension

(11) The machines are freely suspended, i.e. the drum package can move and is suspended in relation to the frame. In this way, a minimum of vibration passes to the bottom plate, which in turn simplifies installation as a concrete foundation is not required.

The machine has four shock absorbers between the bottom plate and the drum package.

The machine's frame is described more thoroughly in the section **Frame.**

11

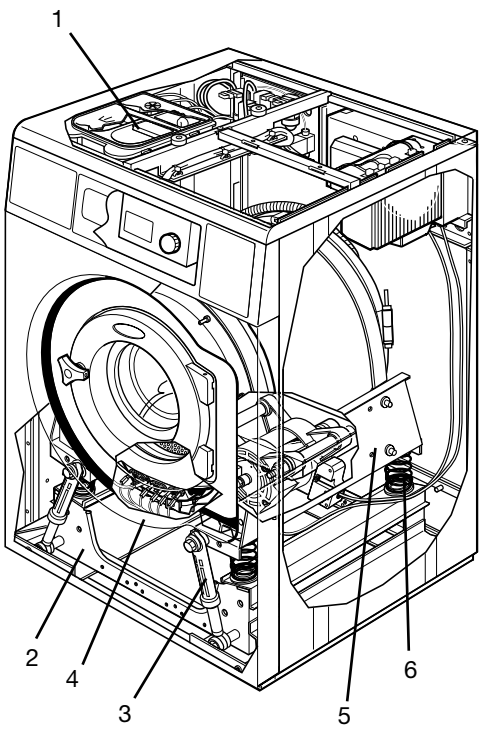

1. Detergent compartment
2. Outer Support
3. Shock absorbers
4. Drain valve
5. Inner support
6. Coil spring

Program unit

Description

(1) The program unit is electronic and comprises a circuit board containing microprocessor, program memory, current regulating circuits, temperature and level control, etc.

(2) The program unit receives its power from a separate voltage unit.

The program unit receives information from the temperature sensor, door lock and level switches. There is also a serial interface to the motor control.

The program unit controls the water and drain valves and the heating via the I/O board, door closing/opening via a drum module and the motor via the motor control.

(1)

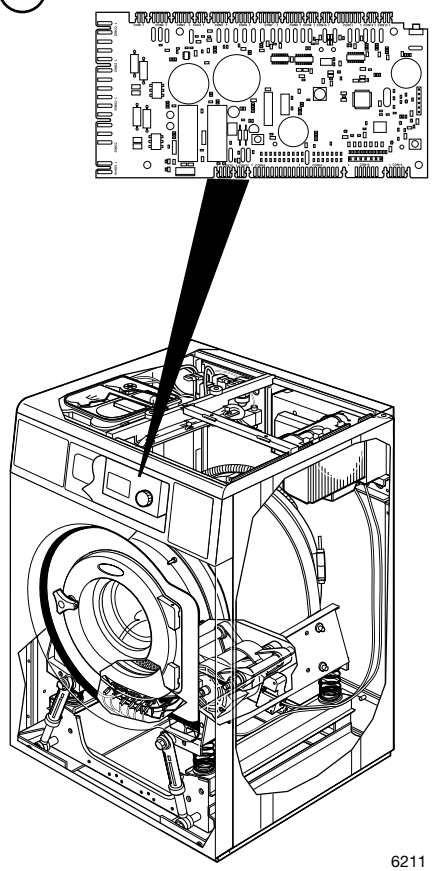

6211 6207

(2)

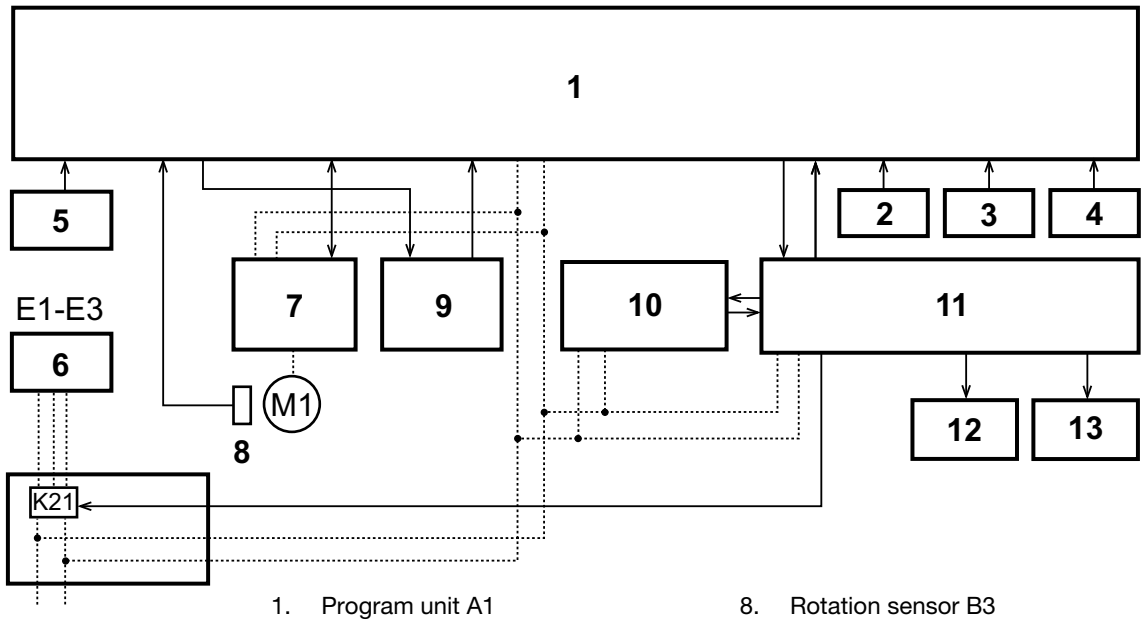

1. Program unit A1
2. Temperature sensor B1
3. Level switch B2
4. Level switch B4
5. Display A2
6. Heater element E1 -3
7. Motor control U1
8. Rotation sensor B3
9. Door lock module A41
10. Voltage unit A5, PSU
11. I/O board
12. Watervalves
13. Drain valve
14. Power supply

Inputs and outputs

(3) The program unit board has the following inputs and outputs:

Board connector	Function
Con 1	Input from temperature sensor (Temp)
Con 2	Databus (D-bus)
Con 3	Databus (D-bus)
Con 4	Tacho
Con 5	Communication, motor control unit (M-com)
Con 6	Connection for software/service download (P-load)
Con 7	Input, Level sensors (level)
Con 8	Serial communication (RS 232)
Con 9	Input, Emergency stop (EMERG)
Con 10	Input, Free wash (key switch) (FREE W)
Con 11	Input, Coin meter (coin)
Con 12	Input, function depending on model (INPUT)
Con 13	Service button in rear electrical module (SERV)
Con 14	Control knob, pulses
Con 15	Control knob, switch
Con 16	Display
Con 17	Input, Buzzer
Con 18	Counter input
Con 19	Door, out (DO)
Con 20	Door, in (DOOR IO)
Con 21	Mains voltage bus (PBUS)
Con 22	Mains voltage bus (PBUS)

(3)

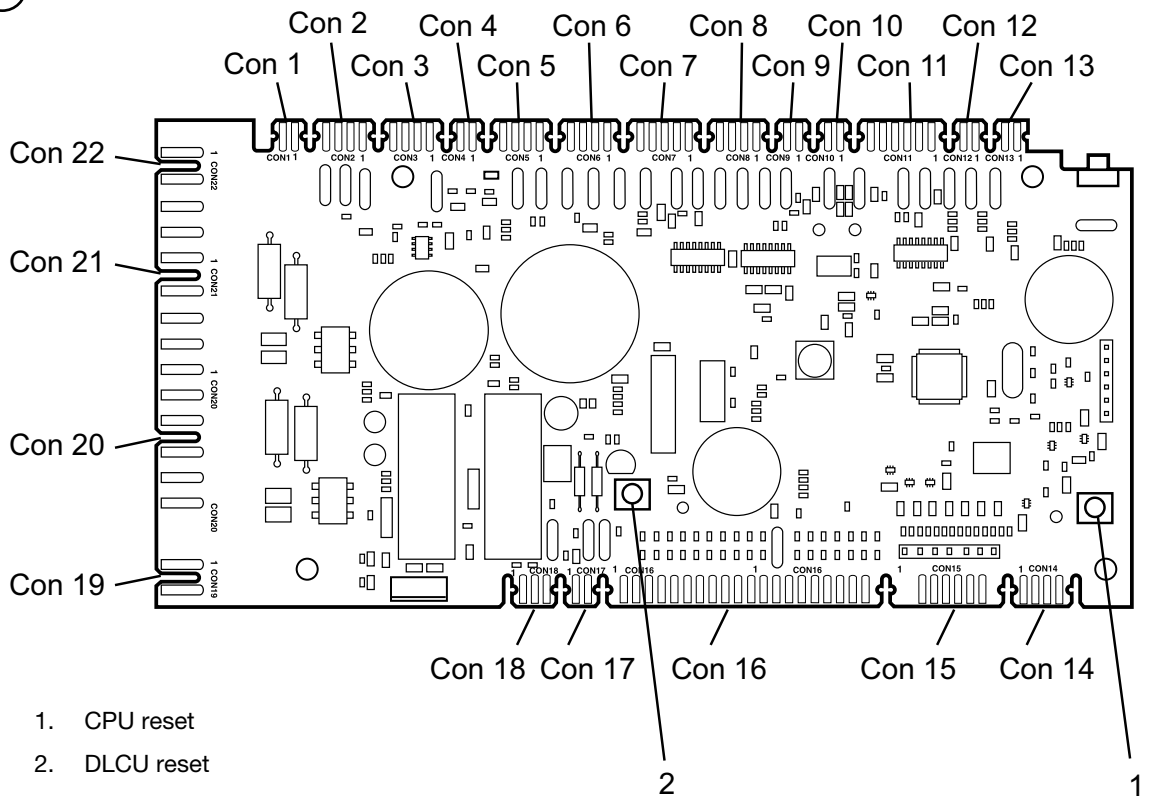

1. CPU reset
2. DLCU reset

Menu tree

The machine software is constructed with menus that are structured according to the menu tree below. The menus become available when the machine is in service mode, see under the heading ”Engaging service mode”.

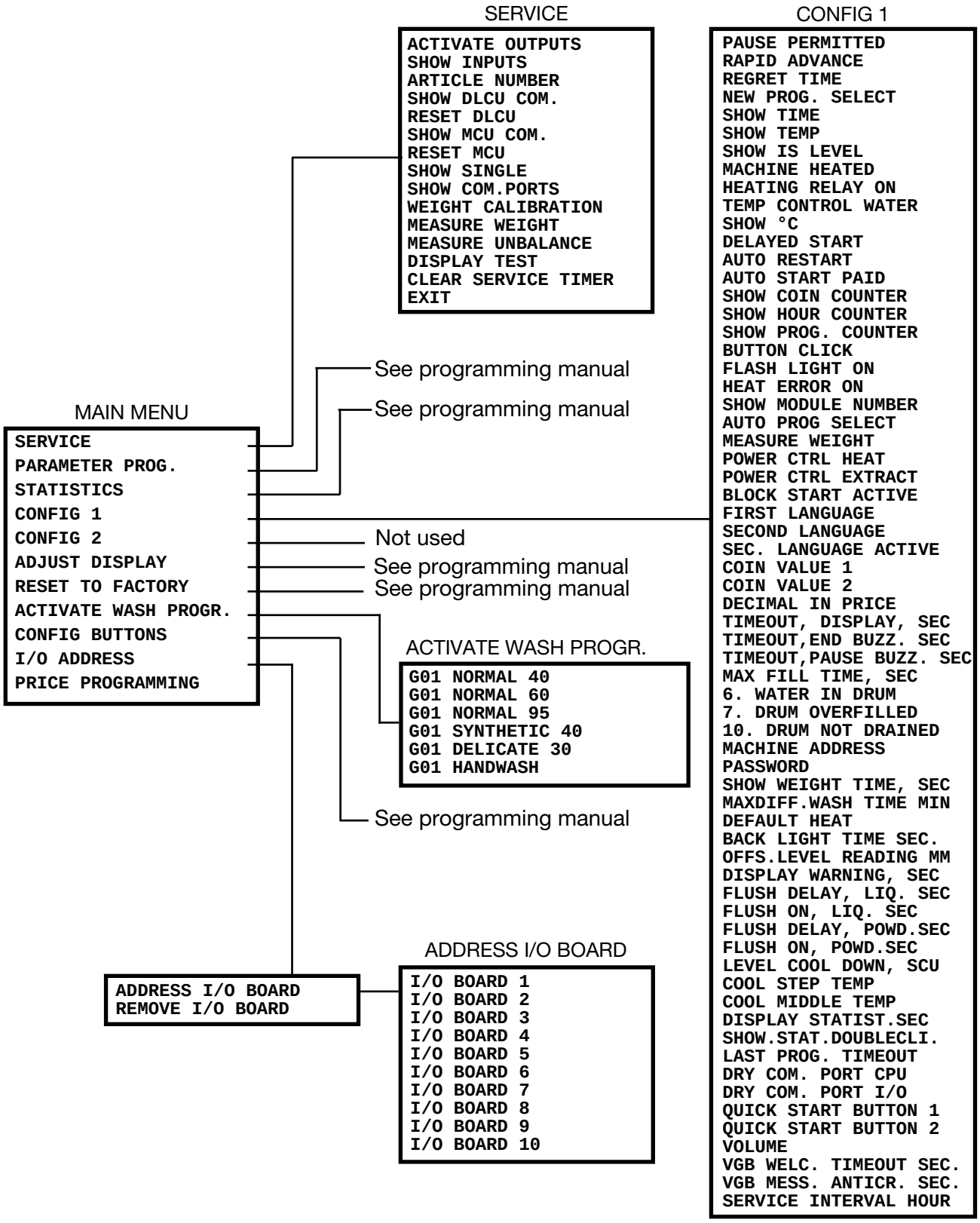

Activating service mode

Service mode is activated by using one of the following alternative:

Alt. 1 Service switch on the CPU board under the top cover on the front of the machine.

Alt. 2 Service switch on the I/O board at the rear of the machine to the right of the electrical connection.

Alt. 3 Service switch on the CPU card will be activated via a link arm which can be accessed from the front below the top front panel. (On machines with coin counting only.)

(1) Press the service button about 2 sec.

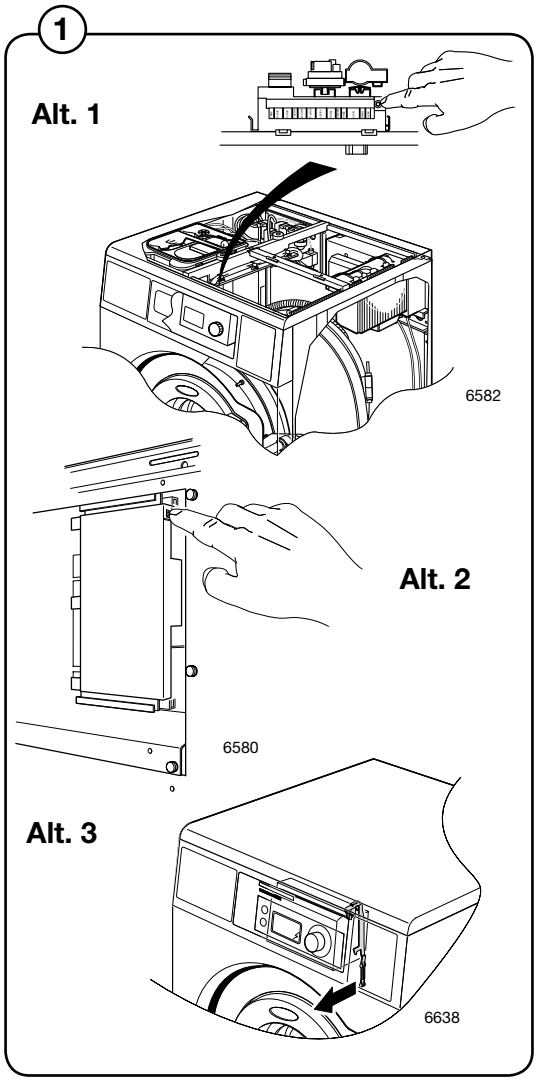

Only for WB4130H, WB4180H

Service mode is activated by using one of the following alternative:

Alt. 1 Service switch on the I/O board at the rear of the machine to the right of the electrical connection.

Alt. 2 Service switch on CPU card under left hand side of the top cover.

(1) Press the service button about 2 sec.

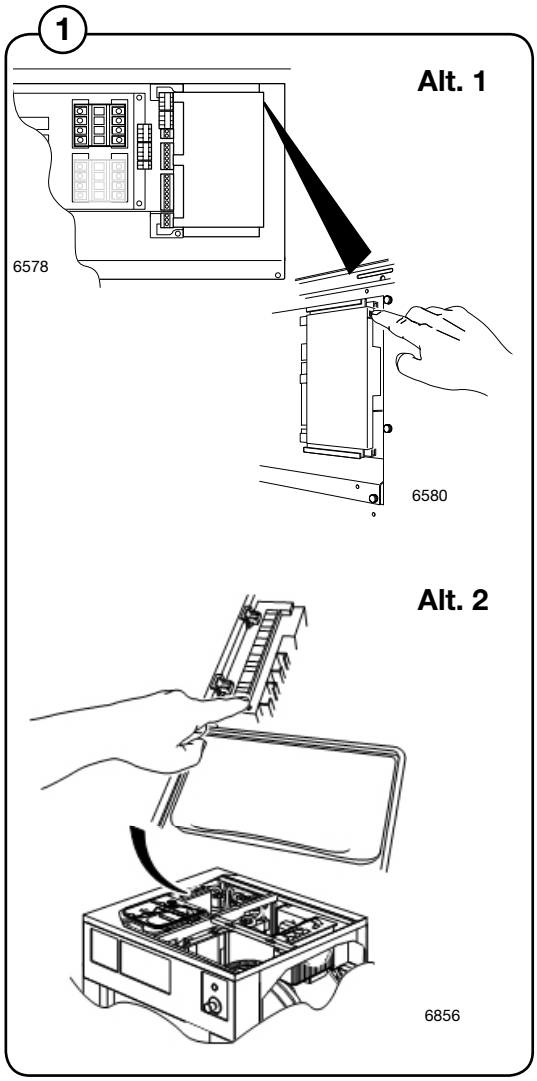

Only for WD4130, WD4240

Service mode is activated by using one of the following alternative:

Alt. 1 Service switch on the CPU board under the top cover on the front of the machine.

Alt. 2 Service switch on the CPU card will be activated via a link arm which can be accessed from the front below the top front panel.

(1) Press the service button about 2 sec.

(1)

Alt. 1

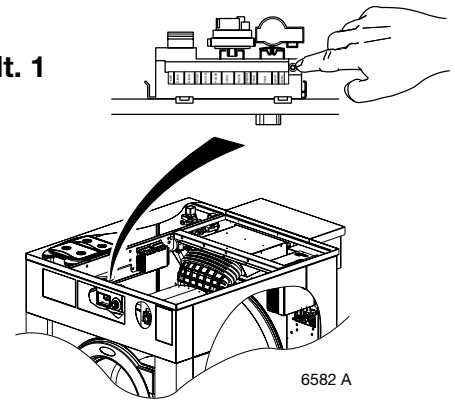

6582 A

Alt. 2

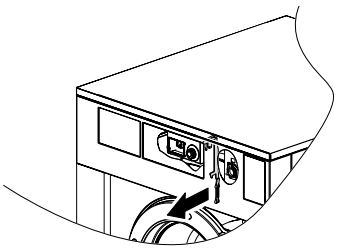

6638

(2) The machine software will now switch to its service mode. The display lists the submenus available in this mode.

This service manual describes the functions and programming instructions for the following submenus:

- SERVICE
- CONFIG 1
- ACTIVATE WASH PROGR.
- I/O ADDRESS

For submenus not presented in this document, please refer to the programming manual.

(3) To save changes to the machine's flash memory, they must be confirmed in a menu that is displayed automatically whenever a change has been made and you are exiting the menu.

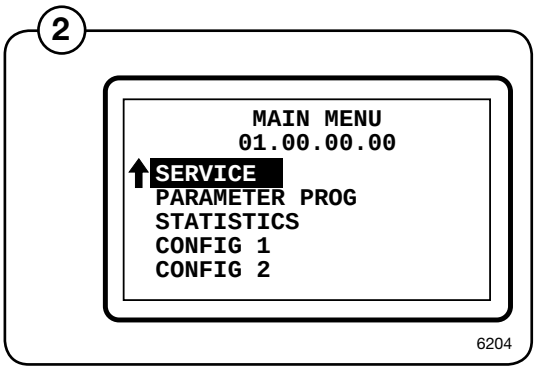

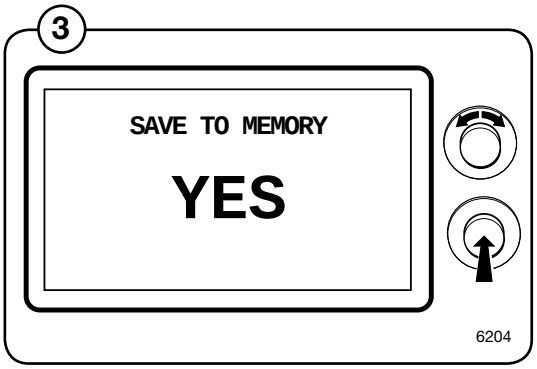

Service program

The service program is used to facilitate troubleshooting the machine. Using this program you can:

- control the machine functions individually
- check the sensor signals to the CPU
- check the communication in the machine control system
- calibrate the weighing function
- weigh and measure unbalance
- check the display

(4) Engage service mode, mark the SERVICE row in the main menu and press the knob.

The display will now show the different submenus in the service program.

(5)
- ACTIVATE OUTPUTS
- SHOW INPUTS
- ARTICLE NUMBER
- SHOW DLCU COM.
- RESET DLCU
- SHOW MCU COM.
- RESET MCU
- SHOW SINGLE
- SHOW COM.PORTS
- WEIGHT CALIBRATION
- MEASURE WEIGHT
- MEASURE UNBALANCE
- DISPLAY TEST

Select the desired menu and press the knob.

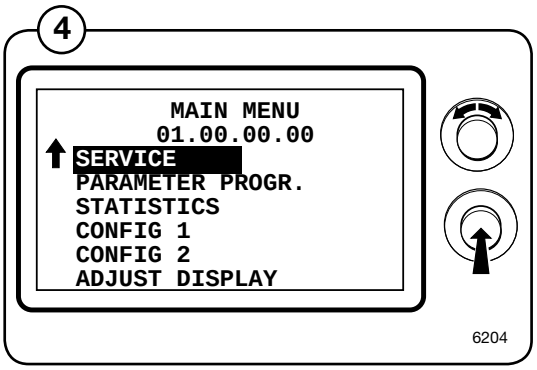

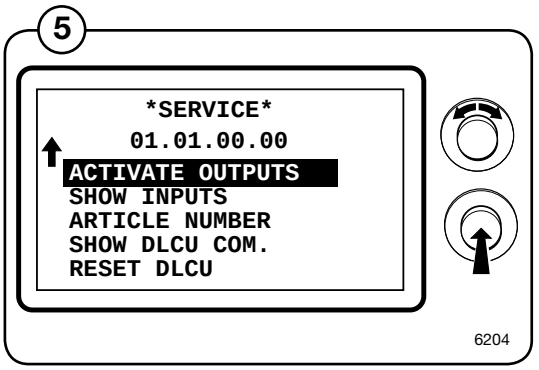

ACTIVATE OUTPUTS

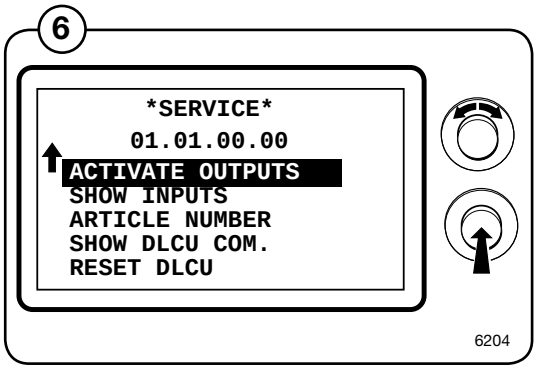

(6) Select the ACTIVATE OUTPUTS row and press the knob.

The display now shows the functions (outputs) that can be activated.

- DOOR
- NORMAL DRAIN
- DRAIN A-D
- COLD WATER
- HOT WATER
- HARD WATER
- TANK 1-4 WATER
- HEAT 1
- HEAT 2
- HEAT 3
- POWDER DETERGENT
- LIQUID DETERGENT
- INTERLOCK MOTOR
- PROGRAM RUN
- MACHINE FREE
- DRUM CW
- DRUM CCW
- DISTRIBUTION
- LOW EXTRACT
- MEDIUM EXTRACT
- HIGH EXTRACT
- TURBO EXTRACT
- CLUTCH
- START CAP. RELAY
- BUZZER
- FLASH LIGHT
- OIL PULSE
- SLOT BLOCKING
- LCD BACK LIGHT ON
- ALTERNATE DOOR LOCK (AHL/OPL)
- FOAM RELAY
- EXIT

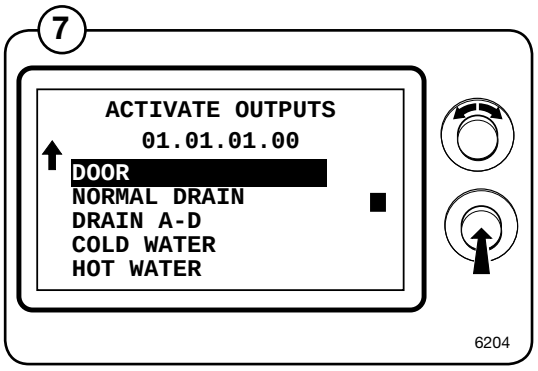

(7) Select the desired function and press the knob.

Several outputs can be activated simultaneously. An activated output is indicated by a filled box to the right.

SHOW INPUTS

(8) Select the SHOW INPUTS row and press the knob. The display now shows the sensor signals (inputs) that can be activated.

(9)

- COUNT 1
- DOOR LOCK
- DOOR CLOSED
- START BUTTON CPU
- SERVICE BUTTON
- PRICE PROGRAMMING
- PRICE REDUCTION
- FREE WASH
- COIN 1
- COIN 2
- EMERGENCY STOP
- ALTER. HEAT RELAY
- START/STOP
- TEMPORARILY PAUSE
- BLOCK START BUTTON
- DRUM OVERFILLED
- PC5
- TEMPERATURE PAUSE
- TANK 1 EMPTY
- TANK 2 EMPTY
- TANK 3 EMPTY
- TANK 4 EMPTY
- OIL EMPTY
- TEMPERATURE
- LEVEL A/D SCU
- LEVEL SCU
- LEVEL MM
- TEMPERATURE DISP
- DRUM SPEED RPM
- TACHO SIGNAL
- LIQUID TANK EMPTY
- QUICK START 1
- QUICK START 2
- UNBALANCE
- BUTTON I/O 1
- INTERLOCK I/O 1
- BUTTON I/O 2
- INTERLOCK I/O 2
- BUTTON I/O 3
- INTERLOCK I/O 3
- BUTTON I/O 4
- INTERLOCK I/O 4
- BUTTON I/O 5
- INTERLOCK I/O 5
- BUTTON I/O 6
- INTERLOCK I/O 6
- BUTTON I/O 7
- INTERLOCK I/O 7
- BUTTON I/O 8
- INTERLOCK I/O 8
- BUTTON I/O 9
- INTERLOCK I/O 9
- BUTTON I/O 10
- INTERLOCK I/O 10
- RAPID ADVANCE
- SERVICE 2 INPUT
- EXIT

Several inputs can be shown simultaneously. An activated input is indicated by a filled box to the right or as a value, for example mm.

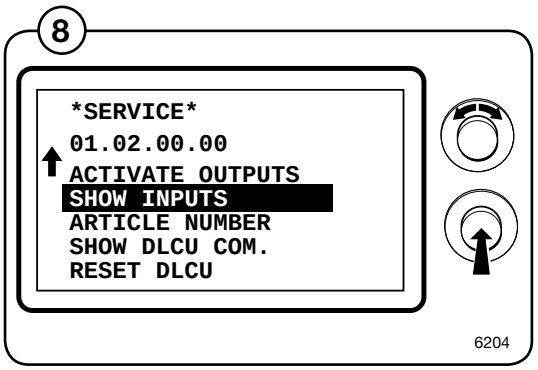

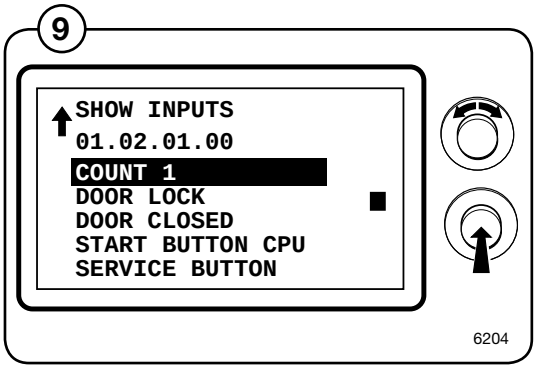

ARTICLE NUMBER

(10) Select the ARTICLE NUMBER row and press the knob. You can now choose on the display to show the article numbers for the program units, I/O boards, motor control or DLCU fitted in the machine. Select the unit for which to show the article number.

(11)

SHOW DLCU COM.

(12) Select the SHOW DLCU COM. row and press the knob. The display shows the status of the communication to and from the DLCU board.

(13)

For detailed information, see next page.

RESET DLCU

(14) Reset DLCU from the error code by selecting the RESET DLCU row and pressing the knob. The reset will take a few seconds.

The square which lights up to the right of the menu bar indicates that there is a error code in the DLCU.

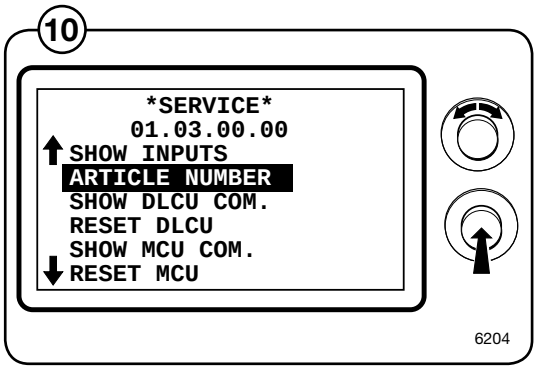

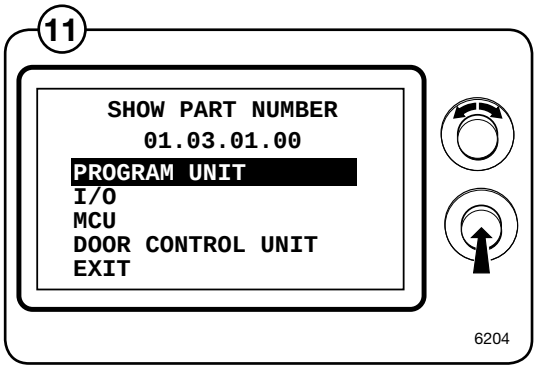

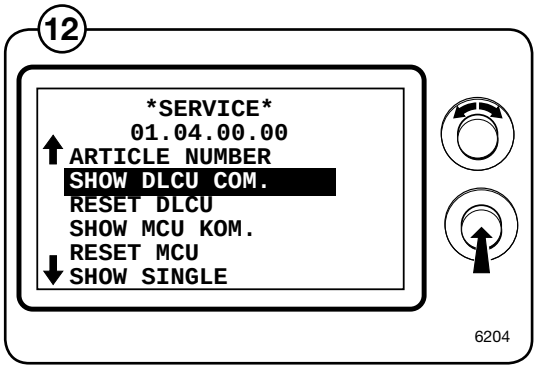

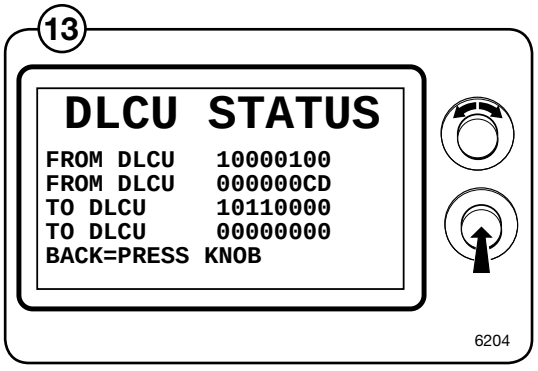

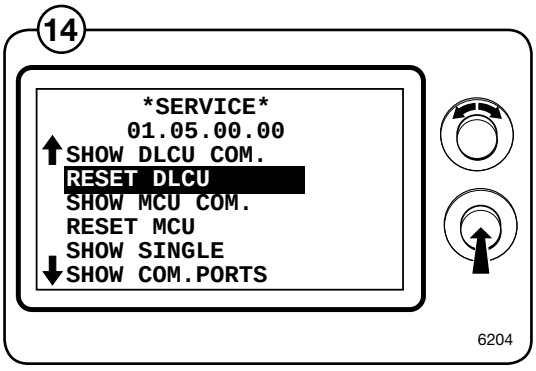

Communication CPU-DLCU showed in the service program

	From DLCU (first data byte)							
	bit 7	**bit 6**	**bit 5**	**bit 4**	**bit 3**	**bit 2**	**bit 1**	**bit 0**
0	Always 1	Always 0	DLCU detects unlock command from CPU	DLCU detects no rotation	DLCU detects motor stop from CPU	DLCU detects no water in drum	DLCU have not generated unlocking	DLCU have not generated locking pulse
1			DLCU detects lock command from CPU	DLCU detects rotation	DLCU detects motor run from CPU	DLCU detects water in drum	DLCU have generated unlocking pulse	DLCU have generated locking pulse

	From DLCU (second data byte)							
	bit 7	**bit 6**	**bit 5**	**bit 4**	**bit 3**	**bit 2**	**bit 1**	**bit 0**
0	Always 0	DLCU detects CPU level = low	Always 0	Always 0	Error bit A not activated	Error bit B not activated	Error bit C not activated	Error bit D not activated
1		DLCU detects CPU level = high			**A**	**B**	**C**	**D**

	Error code			
No actuator circuit (> 50 kohm)	**A**		**C**	
Fault in armering circuit (internal circuit inside DLCU)			**C**	
No rotation when motor is running	**A**			
Rotation when motor is stopped		**B**		
CPU and DLCU water level not matching			**C**	**D**
Water in drum when door is unlocked	**A**	**B**		
Motor is running when door is unlocked		**B**	**C**	
Check sum error				**D**

	From CPU (first data byte)							
	bit 7	**bit 6**	**bit 5**	**bit 4**	**bit 3**	**bit 2**	**bit 1**	**bit 0**
0	Always 1	Always 0	CPU detects door not closed (S3 open)	CPU detects door not locked (S4 open)	Always 0	Always 0	Always 0	Always 0
1			CPU detects door closed (S3 closed)	CPU detects door locked (S4 closed)				

	From CPU (second data byte)							
	bit 7	**bit 6**	**bit 5**	**bit 4**	**bit 3**	**bit 2**	**bit 1**	**bit 0**
	Always 1	Normally 0	Normally 0	Normally 0	Normally 0	Normally 0	Normally 0	Normally 0
		DATA command						
Set service reset		0	1	0	0	0	1	0
Set paus opening		0	0	0	1	0	1	0
Send softw. art. nr.		1	1	0	1	0	0	1

SHOW MCU COM.

(15) Select the SHOW MCU COM. row and press the knob.

(16) The display shows the status of the communication to and from the frequency control such as actual speed and set speed values.

For detailed information, see next page.

RESET MCU

(17) Reset frequency control from the error code by selecting the RESET MCU row and pressing the knob. The reset will take a few seconds.

The square which lights up to the right of the menu bar indicates that there is a error code in the DLCU.

SHOW SINGLE

Select the SHOW SINGLE row and press the knob. The display shows the status of the communication to and from the slot meter.

For detailed information, please contact your supplier.

SHOW COM. PORTS

Select the SHOW COM. PORTS row and press the knob. Possible communication ports are shown in the display. Select a port, then press the knob to test that port. Note that the ports “send” and “receive” must be strapped for the test to work.

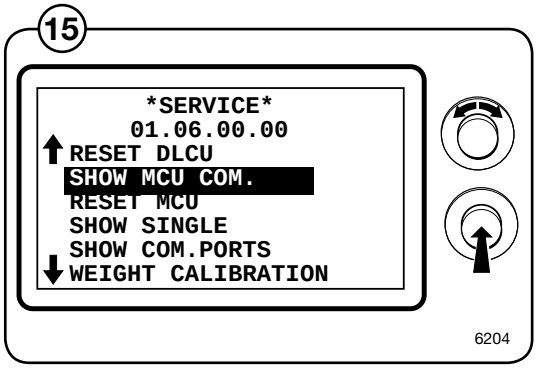

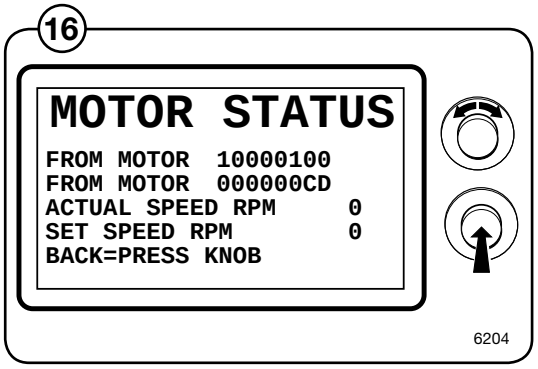

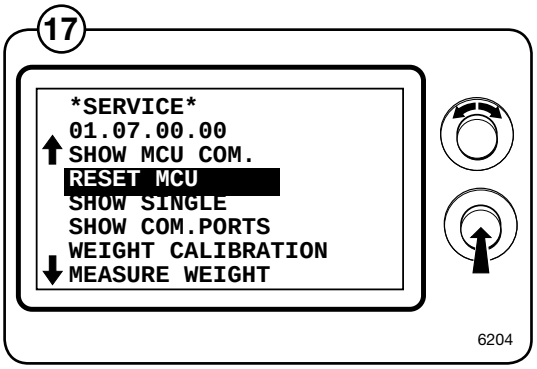

Motor status showed in the service program

	From MCU (first data byte)							
	bit 7	**bit 6**	**bit 5**	**bit 4**	**bit 3**	**bit 2**	**bit 1**	**bit 0**
1	Indicate a trip state with no automatic restart	Reset trip state	Writing, reading to uP/ EEPROM	Weight mode	Unbalance mode	Serial control mode	Always 0	Always 0

	From MCU (second data byte)							
	bit 7	**bit 6**	**bit 5**	**bit 4**	**bit 3**	**bit 2**	**bit 1**	**bit 0**
0					No short circuit indication	DC-bus voltage OK	Interlock OK	Motor following
1					First short circuit indication	DC-bus voltage out of range	Interlock OFF	Motor is not following

Error code				
0	**0**	**0**	**0**	No error
0	**0**	**0**	**1**	1. High temperature FC
0	**0**	**1**	**0**	2. High temperature motor
0	**0**	**1**	**1**	3. Drive request but no interlock signal present
0	**1**	**0**	**0**	4. Communication error
0	**1**	**0**	**1**	5. Short-circuit
0	**1**	**1**	**0**	6. Error in interlock-circuits on FC
0	**1**	**1**	**1**	7. Under voltage on DC-bus
1	**0**	**0**	**0**	8. Over voltage on DC-bus
1	**1**	**1**	**1**	F. Motor not following

WEIGHT CALIBRATION

(18) Select the WEIGHT CALIBRATION row and press the knob.

- Operate the machine with an empty drum.
- After weight calibration, the weight deviation will be shown in a hexadecimal format on the bottom line of the display.
- The drum will go faster and slower a number of times during weight calibration. This is normal. Weight calibration will take a few minutes.
- When exiting weight calibration after it is complete, you will have the option of saving the calibration value.
- The value for 0 calibration is taken on each washing occasion and the weight value is adjusted automatically for any deviations.

NOTE!
The drum must be empty during calibration.

(19) Confirm that calibration is to be performed with YES or return to the previous menu with NO.

MEASURE WEIGHT

(20) Select the MEASURE WEIGHT row and press the knob.

(21) Put in a known weight. The same weight must be shown in the display once the weight has been measured.

Confirm that measurement is to be performed with YES or return to the previous menu with NO.

This function is used to check that the machine is weighing correctly.

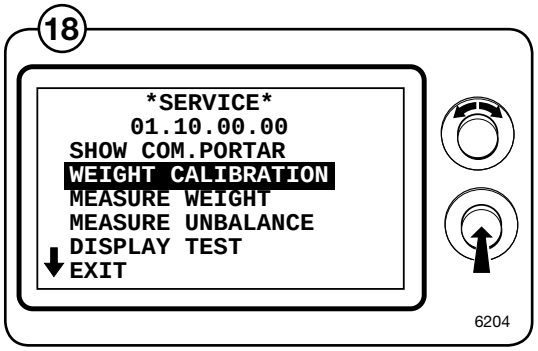

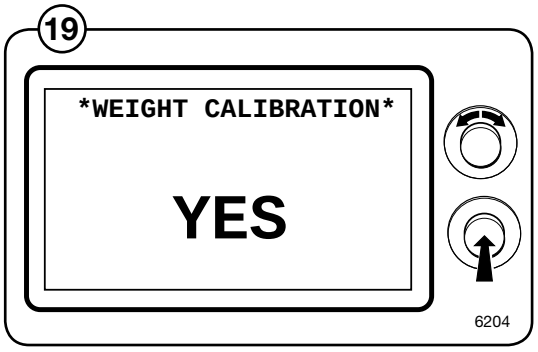

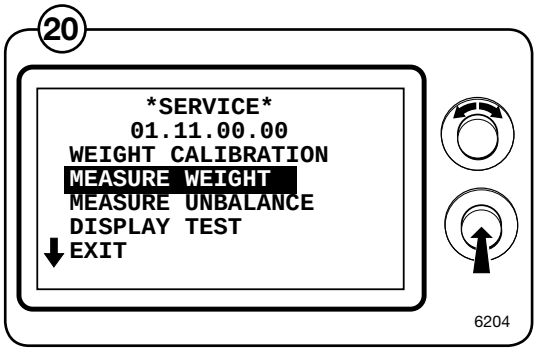

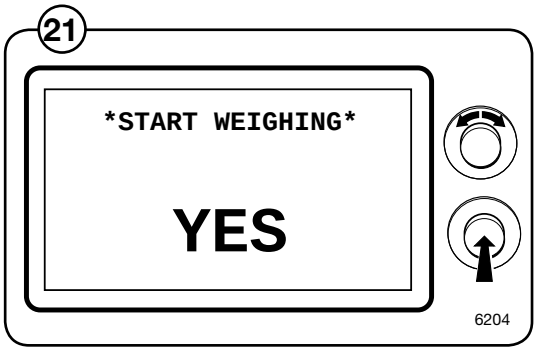

MEASURE UNBALANCE

(22) Select the MEASURE UNBALANCE row and press the knob.

(23) Put in a known unbalance weight. A corresponding weight must be shown in the display once imbalance measurement has taken place.

Confirm that measurement is to be performed with YES or return to the previous menu with NO.

This function is used to check that the machine is measuring unbalance correctly.

DISPLAY TEST

(24) Select the DISPLAY TEST row and press the knob.

(25) The display shows a grid for checking that all the segments in the display are intact. By turning the control knob, two different grids and a completely black and a completely blank page are shown. Press the knob to return to the previous menu.

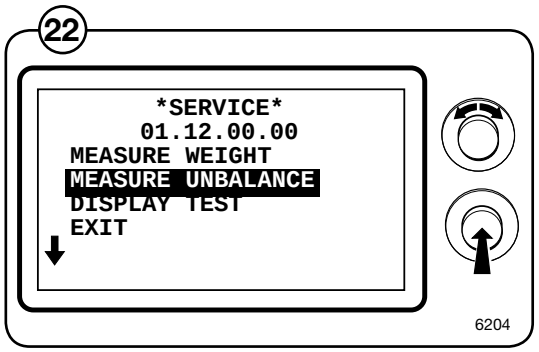

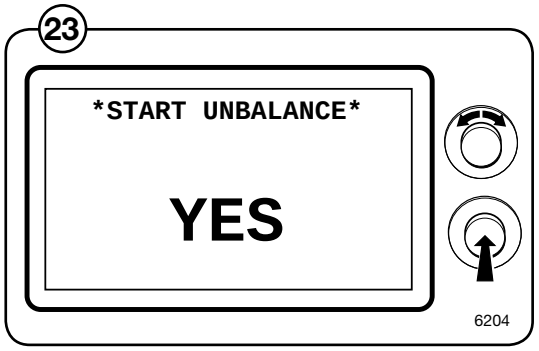

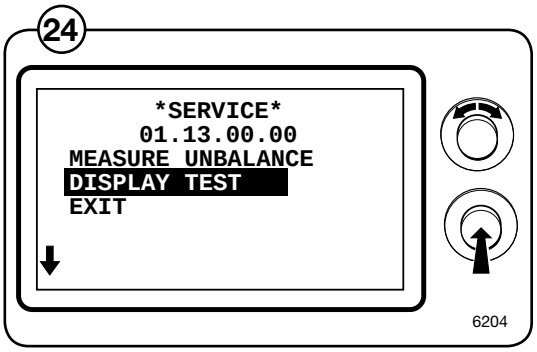

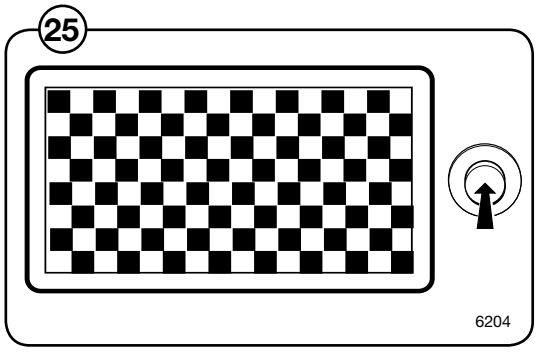

Config 1

The configuration 1 menu contains all the functions and parameters that service personnel can change without a password.

Engage the machine's service mode.

(26) Select the CONFIG 1 row in the main menu and press the knob.

All the available parameters will now be displayed. The table below gives the deerror value on the right.

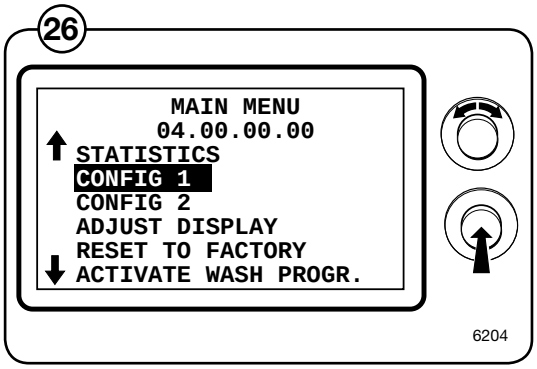

- PAUSE PERMITTED
- RAPID ADVANCE
- REGRET TIME
- NEW PROG. SELECT
- SHOW TIME
- SHOW TEMP
- SHOW IS LEVEL
- MACHINE HEATED
- HEATING RELAY ON
- TEMP CONTROL WATER
- SHOW °C
- DELAYED START
- AUTO RESTART
- AUTO START PAID
- AUTO PROG. PAID (AHL/OPL)
- SHOW COIN COUNTER
- SHOW HOUR COUNTER
- SHOW PROG. COUNTER
- BUTTON CLICK
- FLASH LIGHT ON
- HEAT ERROR ON
- SHOW MODULE NUMBER
- AUTO PROG SELECT
- MEASURE WEIGHT
- POWER CTRL HEAT
- POWER CTRL EXTRACT
- BLOCK START ACTIVE
- FIRST LANGUAGE (COIN)
- DEFAULT LANGUAGE (ALH/OPL)
- SECOND LANGUAGE (COIN)
- LANGUAGE TIMEOUT SEC. (ALH/OPL)
- SEC. LANGUAGE ACTIVE (COIN)
- COIN VALUE 1
- COIN VALUE 2
- DECIMAL IN PRICE (COIN)
- TIMEOUT DISPLAY SEC.
- TIMEOUT, END, BUZ SEC.
- PAUSE BUZZER TIMEOUT
- MAX FILL TIME, SEC.
- 6. WATER IN DRUM
- 7. DRUM OVERFILLED
- 10. DRUM NOT DRAINED
- MACHINE ADDRESS
- PASSWORD
- SHOW WEIGHT TIME, SEC.
- MAXDIFF, WASH TIME MIN
- DEFAULT HEAT
- BACK LIGHT TIME SEC.
- OFFS. LEVEL READING MM
- DISPLAY WARNING SEC.
- DECIMAL IN PRICE (AHL/OPL)
- FLUSH DELAY, LIQ. SEC.
- FLUSH ON, LIQ. SEC.
- FLUSH DELAY, POWD. SEC.
- FLUSH ON, POWD. SEC.
- LEVEL QUICK COOL DOWN, SCU
- COOL STEP TEMP
- COOL MIDDLE TEMP
- DISPLAY STATIST. SEC.
- SHOW STAT. DOUBLECLI.
- LAST PROG. TIMEOUT (COIN)
- SERVICE INTERVAL HOUR
- DRY COM. PORT CPU
- DRY COM. PORT I/O
- QUICK START BUTTON 1 (COIN)
- QUICK START BUTTON 2 (COIN)
- VOLUME
- VGB. WELC. TIMEOUT SEC.
- VGB. MESS. ANTICR. SEC.
- UNLOCK DOOR TIMEOUT
- SET SOON READY MSG
- USE TEXT MESSAGING
- MASTER CODE
- TMIS TIMEOUT SEC.
- QUICK START 1, BLOCKED (COIN)

(27) Select the desired function/parameter and press the knob.

(28) To engage and disengage functions, turn the knob to select YES or NO and then press the knob.

(29) To adjust the value, set the value and press the knob. The arrow in each menu shows the column to be adjusted.

- Turn the knob clockwise to set the desired number between 0 and 9.
- Turn the knob anticlockwise to move to the next column. Turn the knob clockwise and set the value, etc.
- Once all the columns have been set, press the knob to confirm and go back to the config menu 1.

When all the relevant values have been adjusted, select EXIT and press the knob.

(30) Confirm the changes (write to memory YES/NO) and return to the main menu.

Note!
All changes will be executed only after exiting the CONFIG 1 menu.

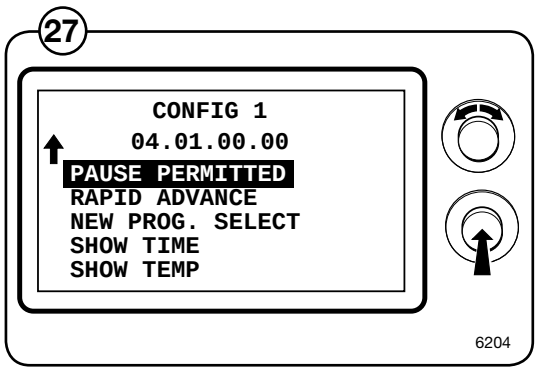

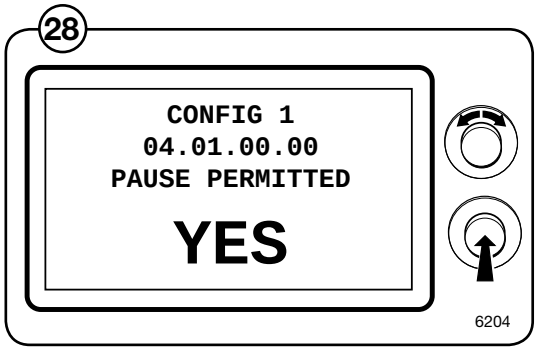

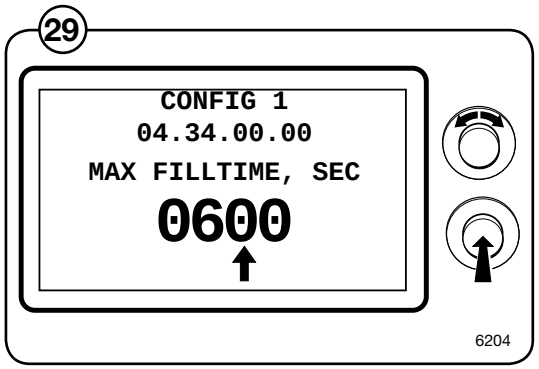

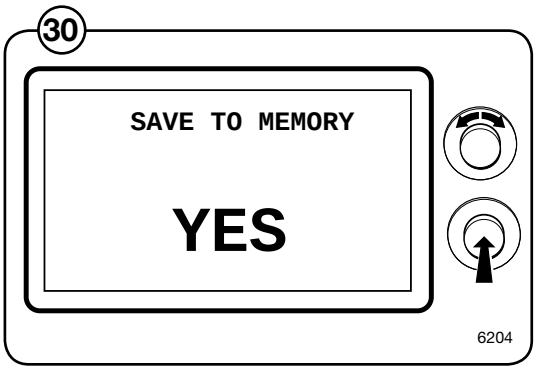

PAUSE PERMITTED

Select whether it should be possible to pause during an on-going wash program.

Yes = A pause is allowed during a wash program.

No = A pause is not allowed during a wash program.

RAPID ADVANCE

Select whether is should be possible to rapid advance forward or backward through the wash program while it is in progress.

Yes = It is allowed to rapid advance through a wash program.

No = It is not allowed to rapid advance through a wash program. Rapid advance can be used on all machines during the regret time, even if you have answered NO.

REGRET TIME

The regret time is used as a delay time for some functions.
When the regret time is gone the function will be blocked. See explanation:

PAUSE PERMITTED, RAPID ADVANCE and REGRET TIME

Those functions are dependent on each other according to the following:

PAUSE = Y
RAPID ADVANCE = Y
Rapid advance, pause and quick stop/program change menu is always available during the whole wash program. Regret time has no function. **Note that if the variable program change is set to NO, this will block the possibility to do a program change. Coin value has no effect.**

PAUSE = Y
RAPID ADVANCE = N
Pause and quick stop/program change menu is available during the regret time. After the regret time is gone, only pause is available. No rapid advance through the wash program selection button is possible, not even during the regret time. **Note that if the variable program change is set to NO, this will block the possibility to do a program change even during the regret time. Coin value has no effect.**

PAUSE = N
RAPID ADVANCE = N
Pause and quick stop/program change menu is available during the regret time. After the regret time is gone, everything is blocked, also pause. No rapid advance through the wash program selection button is possible, not even during the regret time. **Note that if the variable program change is set to NO this will block the possibility to do a program change even during the regret time.**

NEW PROG. SELECT

Select whether to allow switching to another wash program while one is in progress without first stepping rapidly through to the end of the current program before switching. Will only work if PAUS is allowed.

Yes = Switching to a new wash program is allowed.

No = Switching to a new wash program is **not** allowed.

SHOW TIME

Select whether the calculated remaining program time is to be shown on the display window while the program is in progress. This will require the program having been used at least once or the row will be blank even if you respond with Yes.

The time shown is based on a calculation model using an input value from the previous wash program.

Yes = The calculated time remaining of the program is shown on the display window while a wash program is in progress.

No = No time is displayed in the display window.

SHOW TEMP

Select whether the current water temperature is to be shown on the display window while a wash program is in progress. This function cannot be shown on the display at the same time as the SHOW IS LEVEL function, only one of the functions can be shown at one time.

Yes = The water temperature is shown.

No = No temperature is displayed in the display window.

SHOW IS LEVEL

Select whether the current water level is to be shown on the display window while a wash program is in progress. The level is shown in divisions. This function cannot be shown on the display at the same time as the SHOW TEMP function, only one of the functions can be shown at one time.

Yes = The water level is shown. (replaces temperature display in display window)

No = No level is displayed in the display window.

MACHINE HEATED

Select whether the machine is to wait until a programmed temperature has been attained before the wash time starts being counted.

Yes = The programmed temperature must be attained

No = The washing time is counted down as soon as the washing module has been started.

HEATING RELAY ON

Select whether the heating contactor should activate or not when the heating starts.

Yes =The heating contactor will cut in when the heating starts. This is the normal process for heated machines.

Note!
The heating contactor will also cut in on machines that are con figured as unheated, if YES has been answered for this configuration.

No = The heating contactor will not cut in. Used on unheated machines that are fitted with heating contactors (machine changed from heated to unheated).

TEMP CONTROL WATER

Select whether the machine is to control and adjust the water temperature by opening and closing the main valves for hot and cold water during filling.

Yes =Control of main valves during filling.

- Alt.1: Hot and cold water valves both open. If the set water temperature is exceeded, the hot water valve will be shut automatically.
- Alt. 2: Only hot water valve open. If the set water temperature is exceeded, the cold water valve opens automatically together with the hot water valve.

No = No temperature control. The hot and cold water valves are both open until the correct level has been attained.

SHOW °C

Select whether all the temperature values are to be displayed in °C or °F

Yes =All temperature values displayed in °C.

No = All temperature values displayed in °F.

DELAYED START

Select whether there should be the possibility of setting a delay from when the start button is pressed until the machine is to start.

Yes =Time for delayed start can be set. Delayed start is available as a se parate menu bar in the start menu, where you can select the delay in hours and minutes.

No = The delayed start function is disengaged.

AUTO RESTART

Select whether there should be the possibility of setting the machine for automatic restart. Automatic restart is available as a separate menu in the start menu, where the number of automatic restarts of the selected wash programme can be selected by the user.

Yes =Number of automatic restarts can be set.

No = The delayed start function is disengaged.

AUTO START PAID

Select whether the machine is to be able to start automatically, when full price has been paid, for the chosen wash program.

Yes =Automatic start engaged.

NOTE!
If the signal for blocking the start button is engaged, it also applies to the blocking signal for the automatic starting func tion.

No = The automatic start function is disengaged.

AUTO PROG. PAID (AHL/OPL)

Selects whether the machine should automatically select wash program 1 if full payment of this program is done and machine is in idle position. (Unless another wash program has been chosen previously recently).

This function assumes AUTO START PAID is active.

Yes = Wash program 1 is chosen automatically.

No = Wash program chosen manually.

SHOW COIN COUNTER

Select whether the contents of the machine's coin counter should be shown in the display window while a wash program is in progress or outside the wash program without going into service mode. The counter is shown on the display after pressing the control knob twice in quick succession.

Yes = The contents of the coin counter can be displayed if a time has been set for the function SHOW.STAT.DOUBLECLI.

No = No display of the contents in the coin counter.

SHOW HOUR COUNTER

Select whether the contents of the machine's hour counter should be shown in the display window while a wash program is in progress or outside the wash program without going into service mode. The counter is shown on the display after pressing the control knob twice in quick succession.

Yes = The contents of the hour counter can be displayed if a time has been set for the function SHOW.STAT.DOUBLECLI.

No = No display of the contents in the hour counter.

SHOW PROG. COUNTER

Select whether the contents of the machine's counter of completed wash programs should be shown in the display window while a wash program is in progress or outside the wash program without going into service mode. The counter is shown on the display after pressing the control knob twice in quick succession.

Yes = The contents of the program counter can be displayed if a time has been set for the function SHOW.STAT.DOUBLECLI.

No = No display of the contents in the counter.

BUTTON CLICK

Select whether the machine should give a sound for each new position when the knob is turned and pressed in.

Yes = Sound.

No = No sound.

FLASH LIGHT ON

Select whether the output for the flash light is to be activated while the buzzer is activated during a wash program. The output is on all the time and becomes inactive when the buzzer is turned off.

Yes = Flash function on.

No = Flash function off.

HEAT ERROR ON

Select whether the HEAT ERROR ON error code should be displayed when the machine is heating up too slowly.

Yes = The error code is displayed.

No = The error code **is not shown**.

SHOW MODULE NUMBER

Select whether the washing module number should be shown while a wash program is being used.

The washing module number will always be shown during rapid advance, however.

Yes = The module number is displayed.

No = The module number is not shown.

AUTO PROG SELECT

Choose whether wash programme 1 should be selected automatically and displayed in start position as soon as the door is opened/closed or coins are inserted in the coin slot.

Yes = Automatic programme selection takes place.

No = Automatic programme selection off

MEASURE WEIGHT

Select whether the count weight function should be activated. Note that the function cannot be activated for wash programs that are programmed for no weight count.

Yes = Count weight activated.

No = Count weight **not** activated.

POWER CONTROL HEAT

Select whether the power priority function (PC5) for heating should be engaged. For connecting and setting PC5, please refer to separate instructions.

Yes = Power priority (PC5) engaged.

No = Power priority (PC5) **not** engaged.

POWER CONTROL EXTRACT

Select whether the power priority function (PC5) for extraction should be engaged. For connecting and setting PC5, please refer to separate instructions.

Yes = Power priority (PC5) engaged.

No = Power priority (PC5) **not** engaged.

BLOCK START ACTIVE

Select whether it should be possible to block the start of the wash program with the control knob via a separate input.

Yes = Wash program start can be blocked.

No = The wash program start **cannot** be blocked.

FIRST LANGUAGE (COIN)

Select the language to be shown when the machine is powered up. The program unit will return to the language set here if the machine is not used during the period specified in the LANGUAGE TIMEOUT menu.

DEFAULT LANGUAGE (AHL/OPL)

Select the default language to be shown when the machine is powered up and also after language timeout. If language set to zero (no default language selected), the machine will, when it is started, force the user to select a default language.

SECOND LANGUAGE (COIN)

Select one of the available languages to be shown as second language. Note that this function is only available on machines equipped with the coin interface software, where the user menu in the display is presented with two languages.

LANGUAGE TIMEOUT SEC. (AHL/OPL)

Specify with the knob the time after which an unused machine should return to the set language. The time is given in steps of 1 second; 0 - 2550 seconds.

SEC. LANGUAGE ACTIVE (COIN)

Select if the second language shall be used on the display or not.

Yes = The second language will be displayed.

No = The second language will not be displayed.

COIN VALUE 1 and 2

Specify with the knob the value (0 999) for the respective coin slot.

For example: Coin 1, 1 = 1 EURO
Coin 2, 5 = 5 EURO

Coin 1, 50 = 50 Cent
Coin 2, 100 = 1 EURO

Setting the price to 300 and selecting DECIMAL IN PRICE will display the price as 3:00.

DECIMAL IN PRICE (COIN)

On machines with coin counter, the price can be displayed with or without colon (0:00 or 000).

Yes = The colon is displayed.

No = The colon is not displayed.

TIMEOUT DISPLAY SEC.

Specify with the knob the time after which the machine should reset a program selection that has not started. The time is given in steps of 10 seconds; 0 - 2550 seconds.

TIMEOUT, END, BUZ SEC.

Specify with the knob the time during which the buzzer should sound at the end of the program unless the buzzer is turned off manually. The time is given in seconds; 0 - 255.

PAUSE BUZZER TIMEOUT

Specify with the knob the time during which the buzzer should sound for a pause unless the pause is interrupted manually. The time is given in seconds; 0 - 255.

MAX FILL TIME, SEC.

Specify with the knob the maximum time (in seconds, 0 - 2550) it should take to fill the machine with water to the programmed level.

If the water has not reached the correct level within the set time, the ”NO WATER” error message will appear on the display.

6. WATER IN DRUM

Select if the error code shall be active or not. For an explanation of the error code, see section "Error codes".

7. DRUM OVERFILLED

Select if the error code shall be active or not. For an explanation of the error code, see section "Error codes".

10. DRUM NOT DRAINED

Select if the error code shall be active or not. For an explanation of the error code, see section "Error codes".

MACHINE ADDRESS

Specify with the knob the machine’s address (1 - 127) that is used when the machine is connected to the CMIS, TMIS or ELS Network System.

Default value is set to 0, inactive.

PASSWORD

Select whether the functions under CONFIG 1 should be password protected or not.

The password comprises four numerals. The code 0000 means no password is required for the CONFIG 1 menu.

The password code can be changed or removed at any time.

SHOW WEIGHT TIME, SEC.

Used for machines with weight count. Once weighing has been carried out, the weight obtained is displayed over the specified time.

MAXDIFF, WASH TIME MIN

Specify with the knob the maximum time deviation for the total time of the wash program. If this is exceeded in comparison with the total time when the same wash program was last used, the stored total time shall only be adjusted with the limit time. Note that this applies to both positive and negative time.

The time is given in minutes; 0 - 20

DEFAULT HEAT

Select whether the machine should be heated with steam (heating contactors 1/2) or electricity (heating contactor 3) as the deerror heating system.

Yes = Electricity.

No = Steam.

BACK LIGHT TIME SEC.

Specify how long in seconds that the display lighting should be on without the control knob being activated. The value 0000 means that the lighting is on all the time.

OFFS. LEVEL READING MM

The value set is subtracted from the ACTUAL value in mm in order to compensate for the distance between the level recess and the bottom of the inner drum. Once this has been set, the water level above the bottom of the inner drum, etc. can be read.

DISPLAY WARNING SEC.

Specify with the knob the number of seconds the warnings are to be displayed. Warnings are e.g. empty tank alarm from detergent that is shown each time a wash program is displayed.

The time is given in steps of 1 second in the range 0 -255 seconds.

DECIMAL IN PRICE (AHL/OPL)

On machines with coin counter, the price can be displayed with or without colon (0:00 or 000).

Yes = The colon is displayed.

No = The colon is not displayed.

FLUSH DELAY, LIQ. SEC.

Delay time before flushing of detergent after water filling is ended.

The time is given in steps of 1 second in the range 0 -255 seconds.

FLUSH ON, LIQ. SEC.

Rinse times for rinsing detergent after the drum has been filled with water and flush delay has gone.

The time is given in steps of 1 second in the range 0 -255 seconds.

FLUSH DELAY, POWD. SEC.

Delay before rinsing detergent after the drum has been filled with water.

The time is given in steps of 1 second in the range 0 -255 seconds.

FLUSH ON, POWD. SEC.

Rinse times for rinsing detergent after the drum has been filled with water and flush delay has gone.

The time is given in steps of 1 second in the range 0 -255 seconds.

LEVEL QUICK COOL DOWN, SCU

Select the level to which the machine should be filled with the cold water valve if the wash program includes the rapid cooling function.

The level is given in divisions (DIV) in the range 0 - 850.

COOL STEP TEMP

Specify the maximum drop in temperature allowed per minute during cooling. During cooling, the temperature will be monitored so that the average drop in temperature from the starting temperature down to the specified intermediate temperature does not exceed the given value.

The temperature is given in steps of one degree in the range 0 - 100 °C.

COOL MIDDLE TEMP

Specify the temperature at which the cooling function should stop monitoring that the drop in temperature during cooling is not going too fast.

The temperature is given in steps of one degree in the range 0 -100 °C.

DISPLAY STATIST. SEC.

Indicate using the knob how long the statistics for COINS – HOUR COUNTER – PROGRAM COUNTER are to be displayed when the power to the machine is switched on. The time is given in steps of 1 second in the range 0 -255 seconds.

SHOW STAT. DOUBLECLI.

Indicate using the knob how long the statistics for COINS – HOUR COUNTER– PROGRAM COUNTER are to be displayed following rapidly pressing the knob twice. The time is given in steps of 1 second in the range 0 -255 seconds.

LAST PROG. TIMEOUT (COIN)

After wash program ended and door opened, the used wash program will be shown on the display for a certain time. This makes it possible for the user to see the previous wash program that was selected and used.
When time ended the display will return to show the same as before the power was cut.

SERVICE INTERVAL HOUR

The machine can show an indication that service is needed on the display. Select after how many hours the indication shall be shown after last reset of the service indication.
NOTE!
Only used in CPUs with software for Freescale microprocessor S12 and in GEN6COINOP with software for Hitachi H8 microprocessor.

DRY COM. PORT CPU and I/O

This is only used on machines with two different control systems such as Compass and Selecta II.
Select which port on Compass to communicate with the Selecta II timer. If "Dryer com. Port CPU" is set to YES, the communication to the dryer timer Selecta II will be done through the RS232 on CPU board. The internal Communication RS232 port on the CPU for Compass will be used.

If "Dryer com. Port CPU" is set to NO, the communication to the Seleta II timer can be done through the RS232 port available on I/O-boards. The address to the I/O-board then needs to be set on the menu line "Dryer com. Port I/O". If menu line set to zero, no communication accepted by the Selecta II timer, will be performed on the I/O-board RS232 port.

NOTE!
Both menu lines can not be active at the same time.
The two menu lines are only valid in machines where the software for the coin program selection interface is used.

QUICK START BUTTON 1 and 2 (COIN)

Select if the two buttons, available on the Compass timer, shall be used as quick start buttons or as option buttons.

Yes = The button is set to quick start.

No = The button is set to option button.

NOTE!
Only in GEN6COINOP software and Freescale microprocessor S12.

VOLUME

Set the volume on the voice guidance board (if the machine is equipped with voice guidance).
A value between 0 and 255 can be used where 0 will turn the voice guidance off

VGB. WELC. TIMEOUT SEC.

Select if a welcome message will be sent out from the voice guidance or not. If timeout gone and machine not operating, a welcome message will be sent out from the voice guidance if door opened/closed, any buttons pressed or program selector used.
If timeout not gone, welcome message will be omitted.

VGB. MESS. ANTICR. SEC.

Select if anticrease message shall be sent out or not by the voice guidance system after drying. The anticrease function will make the drum moving backwards and forwards a certain time after the drying cycle has ended. When the machine enter anticrease after drying, a message will always be sent out that door can not be unlocked if program selector is pressed. This message will be repeated with a frequency defined by the time set in this menu. 0 = no message will be sent out.

UNLOCK DOOR TIMEOUT

Use the knob to set the time in minutes that the door will be locked.

For example if the value is set to 30, the door will be unlocked after 30 minutes from program end.

Default value is set to 0 minutes, inactive.

SET SOON READY MSG

Use the knob to set the time in minutes that shall be left of the program before a text message will be send to the customer.

For example if the value is set to 10 the text message YOUR LAUNDRY WILL BE FINISHED IN 10 MINUTES will be send to the customer 10 minutes before program end.

Default value is set to 0 minutes, inactive.

USE TEXT MESSAGING

Change the default value NO to YES.

If the value is set to NO the TMIS (text messaging) function will not be activated.

MASTER CODE

Set a 4–digit code that unlocks the door.

Default code is set to 0000.

The master code is an override function that unlocks the door even if a customer has locked the door via the TMIS system. It is recommended to change the default code if TMIS with door lock functions is activated. If the master code is left unchange, users can easily cheat the system by punching in 0000 to open the door.

Save to memory by selecting YES.

TMIS TIMEOUT SEC.

Set the timelimit for the user to activate the TMIS function. The users SMS needs to be received within the set time, if not the TMIS function will be deactivated.

Default time set to 0.

Save to memory by selecting YES.

QUICK START 1, BLOCKED (COIN)

When option button 1 is used as a quick start button.
Select if it shall be possible to run a drum rinse program more than once without an ordinary program after.

Yes = It is not possible to run more than one drum rinse program without an ordinary program after. (The function is blocked).

No = It is possible to run more than one drum rinse program without an ordinary program after. (The function is not blocked).

Default value is set to Yes.

Save to memory by selecting YES.

Activate wash program

The ACTIVATE WASH PROGR. menu is used to specify the wash programs in the program library that are to be made available to the user and in which order the wash programs are to be presented in the display.

(31) Engage service mode and select the ACTIVATE WASH PROGR. row in the main menu. Press in the knob.

(32) All the wash programs contained in the installed program library are now shown.

NORMAL

SYNTHETIC

DELICATE

HANDWASH

WOOL

EXTRACTION

The activated wash program is presented in the program selection menu. At the end of each row these wash programs are numbered in the order they are presented in the user program selection menu.

Add (activate) a wash program

(33) Select the wash program to be activated and press the knob. The selected wash program is assigned the number after the last activated program, i.e. the selected program will be presented last in the program selection menu.

Remove (deactivate) a wash program

(34) Select the wash program to be removed and press the knob. The selected wash program is deactivated and renumbering will take place automatically for the remaining programs in the list.

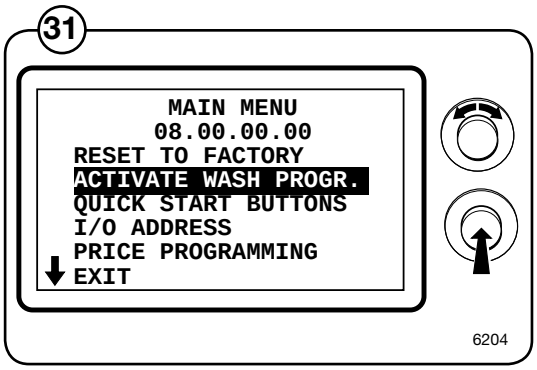

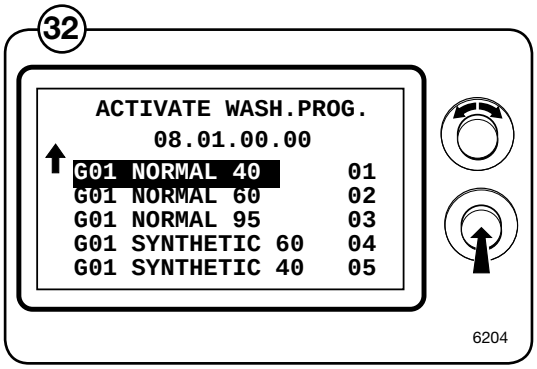

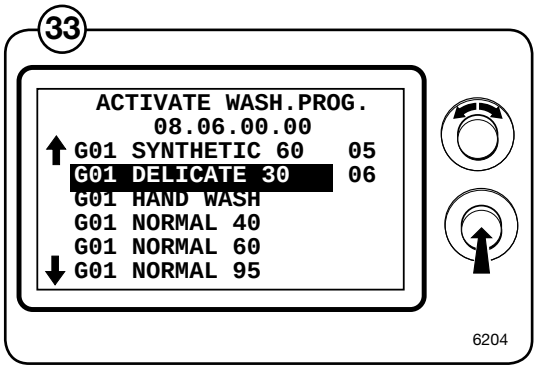

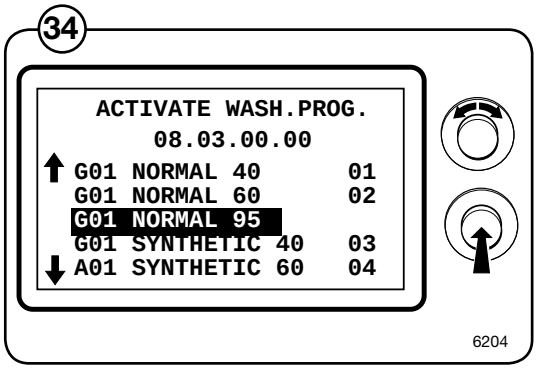

I/O modules

General

Washing machines may be equipped with either one or two I/O modules:

- I/O module 1 controls internal machine functions and is always installed in the machine prior to delivery. It controls outputs to water valves, waste discharge and heating.
- I/O module 2 is installed as an optional extra, controlling the external functions of the machine, i.e. inputs from payment and booking systems and outputs to detergent pumps.

The functionality of I/O module inputs and outputs is dependant on the parameter software downloaded to the machine's program device. The function options for the I/O modules are indicated by a letter in the program designation for each module and, together with the article number of the parameter software, shown in the ARTICLE NUMBER menu of the service program as per the following example:

Program designation 3A02 CH EL/DS 465H **EF**

Function options I/O module 1 (internal functions)

Function options I/O module 2 (external functions)

Article number shown in the service program 432662204 **A E**

If the second letter (I/O module 2) appears in lower case, it means that the machine is not fitted with I/O module 2 but the downloaded parameter software is I/O module 2 enabled.

Program designation 3L02 LG1 CH EL/DS 465H **Ae**

I/O module 2 is enabled for the specified function option

Article number shown in the service program 432662204 **A e**

If the machine subsequently fitted with I/O module 2, the module will acquire the function option as specified by the second letter once the new I/O module has been addressed.

Function options via the service program

(1) Engage service mode, highlight the SERVICE line in the main menu and press the knob.

The display will now show the different submenus in the service program.

(2) Highlight the ARTICLE NUMBER line and press the knob. You can now choose to view the article numbers of program devices, I/O modules, motor control or DLCUs installed in the machine.

(3) Highlight the PROGRAM DEVICE line and press the knob.

(4) Read the program article number under PARAMETER SOFTWARE. The letters at the end of the article number indicate the function options of the I/O modules in the current program; for more information, refer to the General and Function Options sections in the documentation for each I/O module.

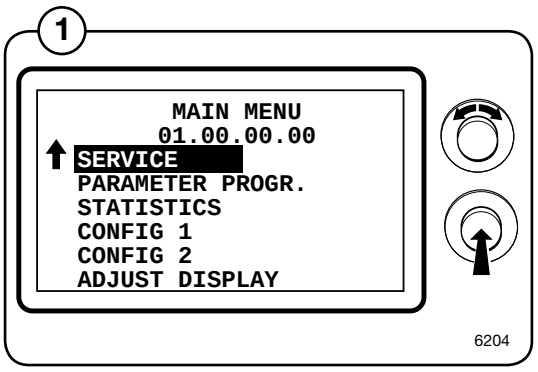

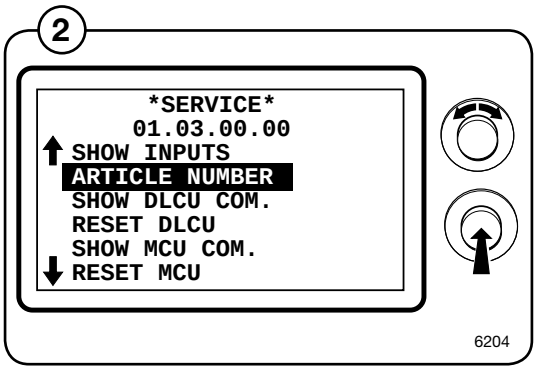

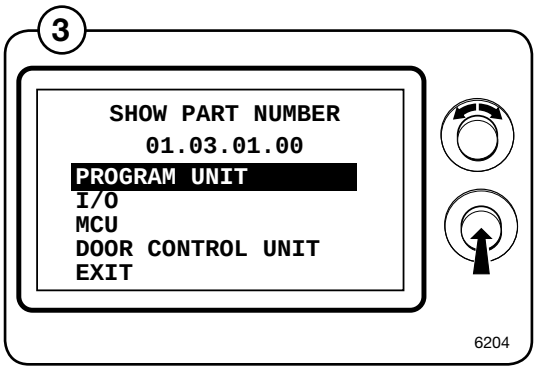

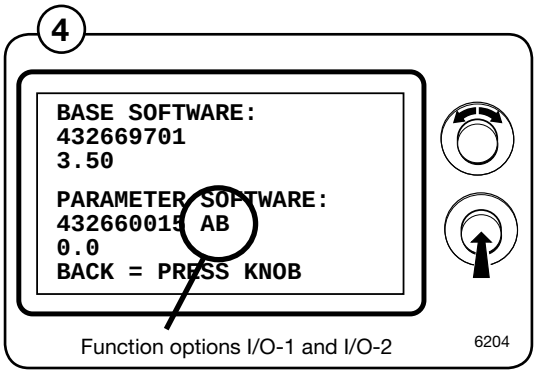

Function options I/O-1 and I/O-2

Function options via program designation

(5) The parameter software installed in a machine's program device on delivery is specified on 2 plates, one located on the inside of the door and one by the machine's electrical connection.

Using this article number, you can find the program designation and thereby identify I/O module function options in one of the following ways:

Option 1.

Access the spare parts list under "Program Device".

(6) The program designation and the I/O module function options are specified in the remarks column for the relevant parameter software article number.

Option 2.

Open the "Compass Control Loader – Existing software" CD and select the relevant machine.

(7) The program designation and the I/O module function options are specified for the relevant parameter software article number.

5

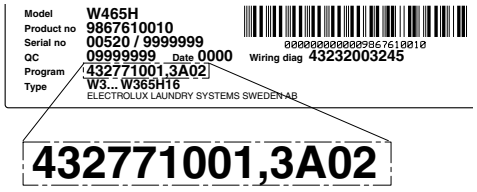

6640

6

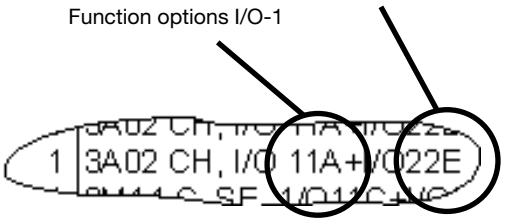

6639

7

MACHINE	PROGRAM	PART NO	REVISION	TYPE	HEATING	WATER
W455H	3A02	432660002	3.858	SE A,f	EL/DS	CH
W455H	3M14	432660003	3.859	SE C,E	EL/DS	C
W455H	3H12	432660004	3.858	SE D,e	EL/DS	C

Function options I/O-1 and I/O-2

Function options for Type 1 and Type 2 I/O modules

Function options, I/O module Type 1				
A	**B**	**C**	**D**	**E**
Waste	Waste	Waste	Waste	Waste
Heating	Heating	Heating	Heating	Heating
3 Hot water	3 Hot water	–	1 Hot water	1 Hot water
3 Cold water	4 Cold water	4 Cold water	5 Cold water	1 Cold water

Function options, I/O module Type 2						
A	**B**	**C**	**D**	**E**	**F**	**G**
External slot meter	Start block	Start block	Price reduction	PC 5	Start block	Heat switch
Price programming	Start/Pause	Heating pause	Heating pause	Heating pause	Heating pause	Start/Pause
Detergent tank empty	Detergent tank empty	Detergent tank empty	Detergent tank empty	Detergent tank empty	Detergent tank empty	Detergent tank empty
Temporary pause	Temporary pause	Temporary pause	Temporary pause	Temporary pause	Temporary pause	Temporary pause
5 detergent signals	5 detergent signals	5 detergent signals	5 detergent signals	5 detergent signals	5 detergent signals	5 detergent signals
1 programme signal	1 programme signal	Free machine	1 programme signal	1 programme signal	1 programme signal	Gas heating

Replacement of I/O module

I/O modules 1 and 2 are installed in the same way, but are located in different parts of the machine. The following illustration only shows how to replace I/O module 2, but the same procedure also applies to I/O module 1.

I/O module 2 is located on the rear PCB and accessible once the protective plate is removed.

(8) • Remove the electrical connections on the module.

(9) • Using a screwdriver, undo the lock screw holding the module in position.

(10) • Rotate the module to the left.

(11) • Lift out the module

• Fit the new module by reversing the removal procedure.

8

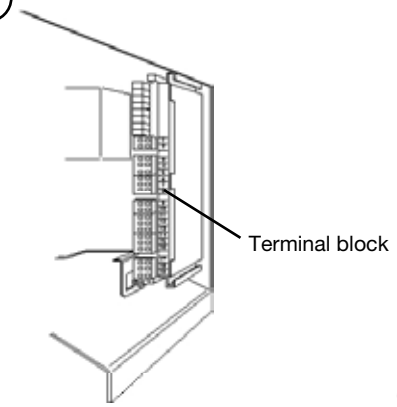

6572

9

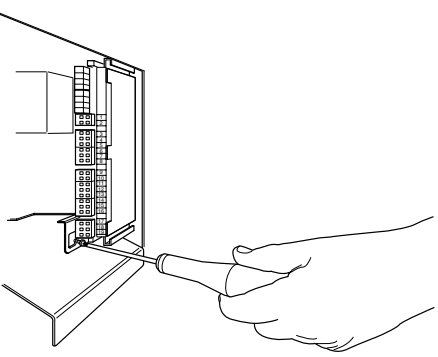

6573

10

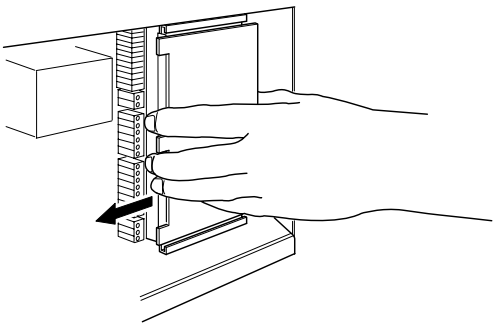

6574

11

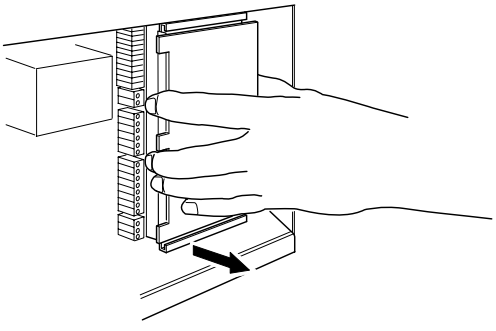

6575

External connections to I/O module type 2

Connection of external dosing equipment

The external dosing equipment power supply must never be connected to the machine's incoming terminal block or to the edge connectors on the IO-board.

Machines fitted with connectors

(12) • Connect the pump assembly to connections A and B on the washing machine. Connect the signal cable to B and the power supply to A.

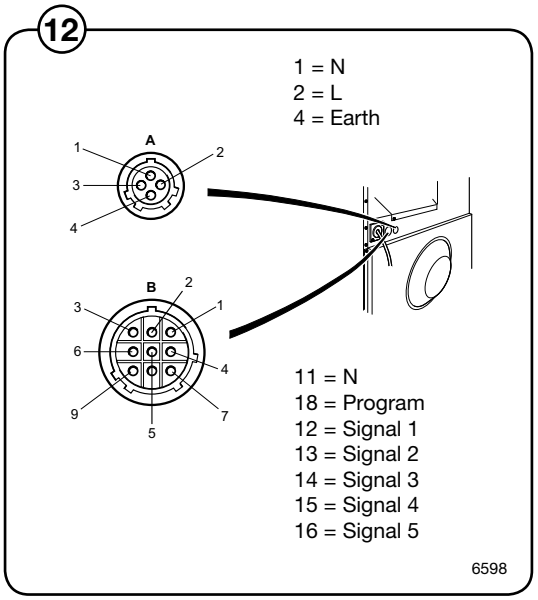

Machines without connectors

(13) • Connect the external pump assembly for liquid washing detergent to I/O module 2, which is located to the right of the incoming power supply.

The I/O module has edge connectors for connecting external pumps.

The edge connectors may be removed from the board when connecting the cabling.

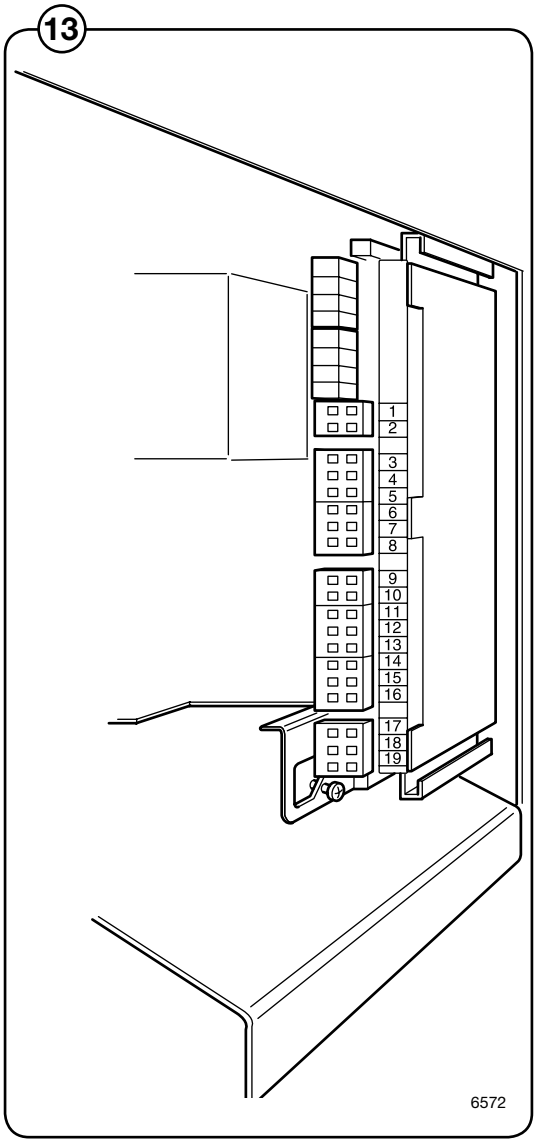

Outputs

(14) • External power supply (e.g. 24V DC) for pumps is to be connected to 9 and 10. If the internal power supply (from the washing machine) is to be used, it may be taken from 1 (N) and connected to 9 and from 2 (L) and connected to 10. The outputs may be loaded with max 0.5 A.

(15) • Signals for pumps 1 - 5 are to be connected to connections 12 - 16 where:

12 = Detergent signal 1

13 = Detergent signal 2

14 = Detergent signal 3

15 = Detergent signal 4

16 = Detergent signal 5

• The programs held on the machine can be found on the machine's data plate.

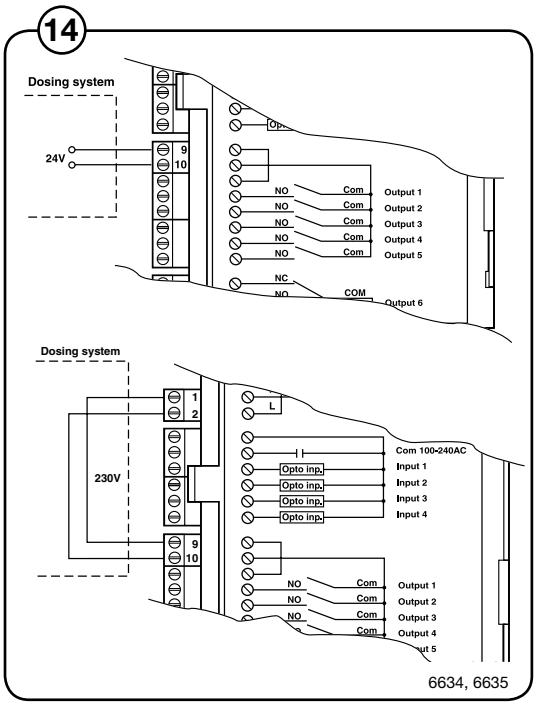

	3M14*	3F01*	3R01*	3F02*	Other programs
Signal 1	–	Prewash	Prewash	Prewash	Prewash
Signal 2	Main wash	Main wash	Main wash	Main wash	Main wash
Signal 3	Rinse agent	Rinse agent	Rinse agent	Rinse agent	Rinse agent
Signal 4	Mop last rinse	Disinfection	Last rinse	Main wash	–
Signal 5	Bleaching agent	Bleaching agent	Bleaching agent	Bleaching agent	Bleaching agent

* M = Mop, F = Farm, R = Restaurant

Inputs

• The signal level may be 5 - 24V DC/AC or 100 - 240V AC. At 5 - 24V, the signal reference must be connected to 3 and at 100 - 240V to 4.

NOTE!
Do not mix potentials on the inputs.

NOTE!
Connecting excessive voltage (> 24V) to connection 3 may damage the I/O module.

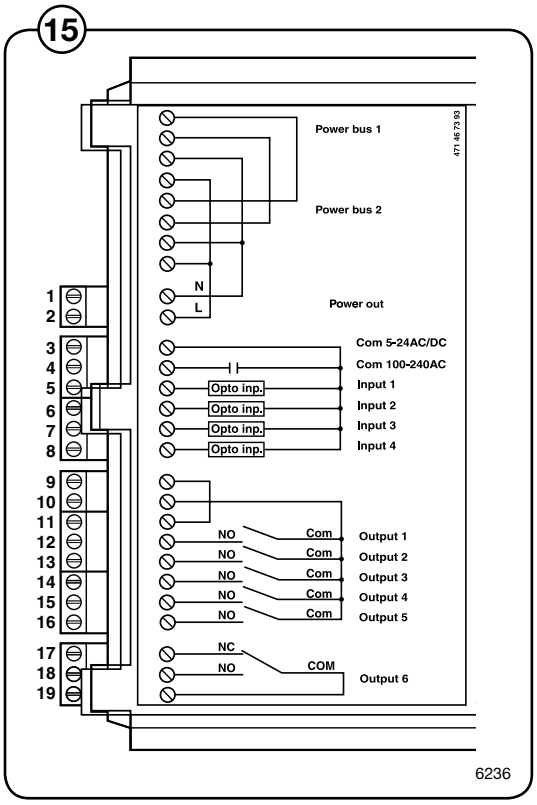

(16) • Connection 8 may be connected if there is to be a pause in the wash program, e.g. while detergent is being dosed.

The figure shows an example of engaging a 24V pause signal. The wash program will pause for as long as the pause signal remains active (high).

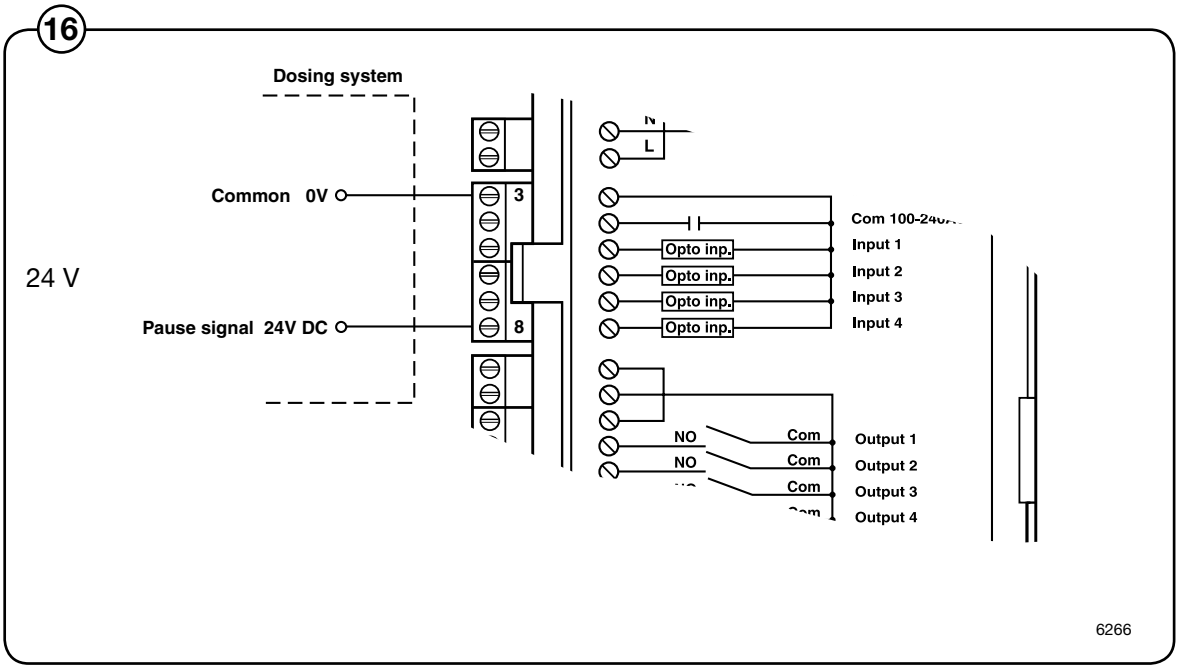

(17) • If connection 7 is connected, an error message will be shown in the display if any of the chemical tanks are empty. However, the wash program will continue.

The figure shows an example of engaging a normal open contact.

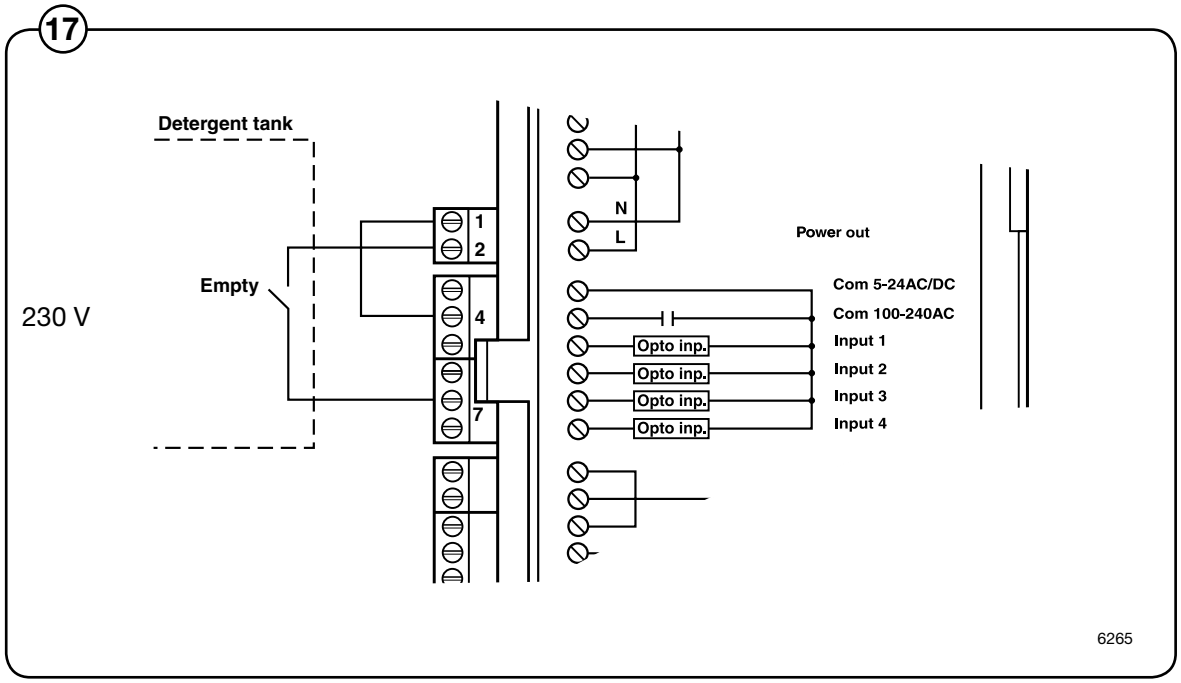

Circuit diagram of function options for I/O module type 2

The wiring diagram for I/O module type 2 may be one of the following variants: 22A, 22B, 22C, 22D, 22E, 22F or 22G.

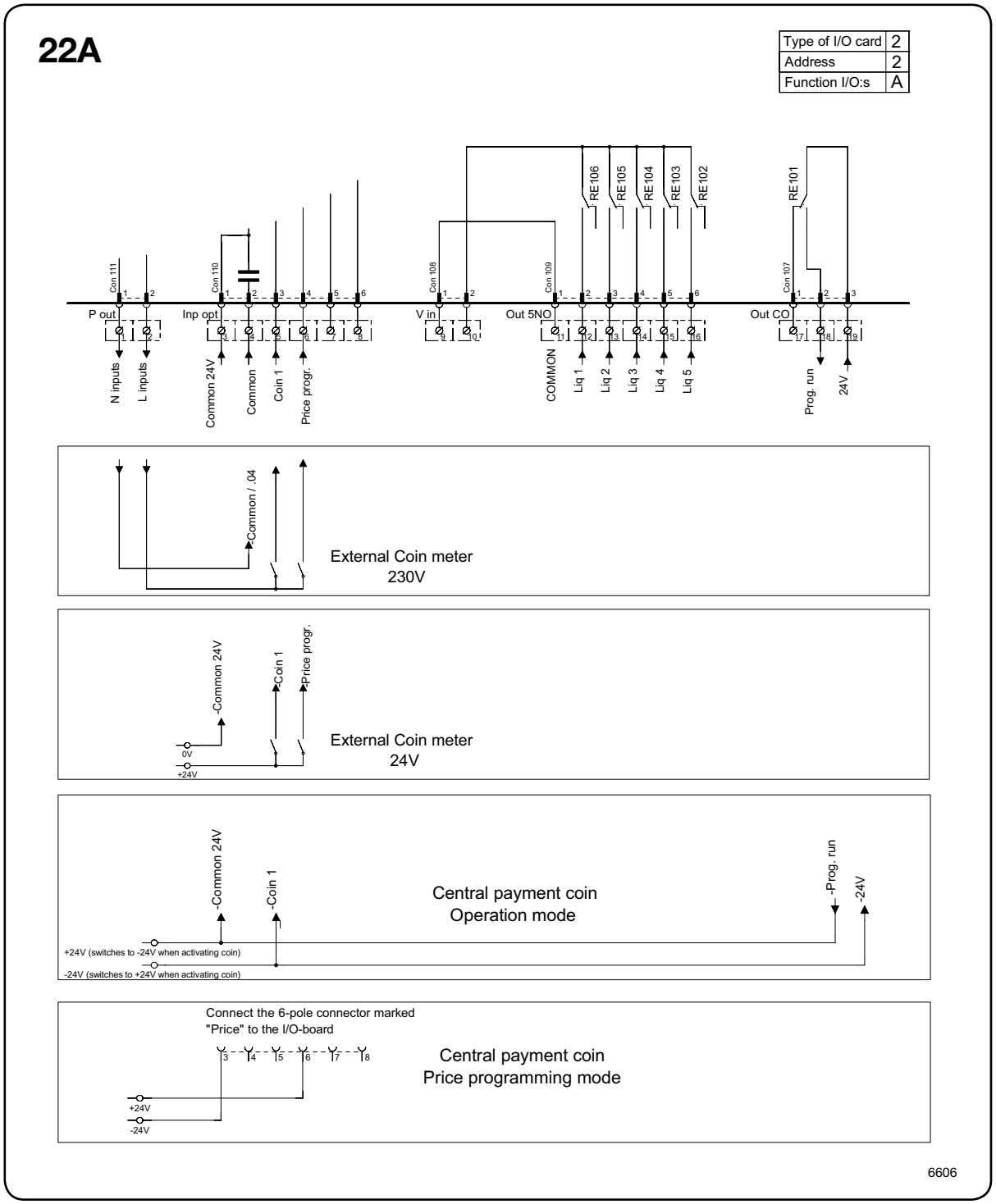

- The signal received from external slot meters must be a pulse.
  In order to count down prices, the signal initiating the programming procedure must be active (high).

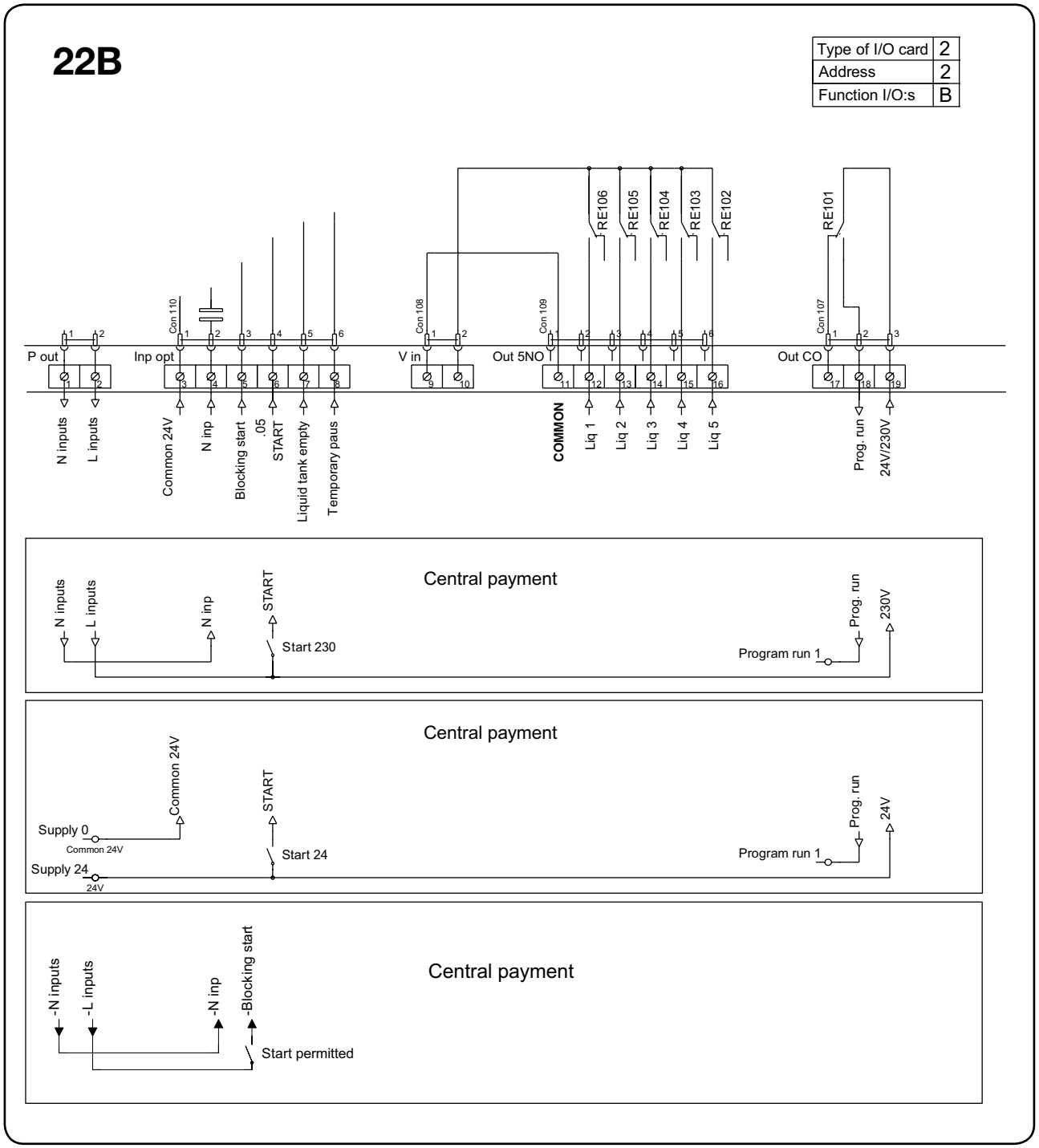

6316

- To start the machine from a central payment system, the payment system must transmit a start pulse to the machine. Door lock activates on positive flank and program starts on negative flank of start pulse. The start pulse can be either 230V or 24V. In order to receive a feedback signal once the machine has started, 230V or 24V must be connected to connection 19. The feedback signal on connection 18 remains active (high) during the entire wash program.

22C

Type of I/O card	2
Address	2
Function I/O:s	C

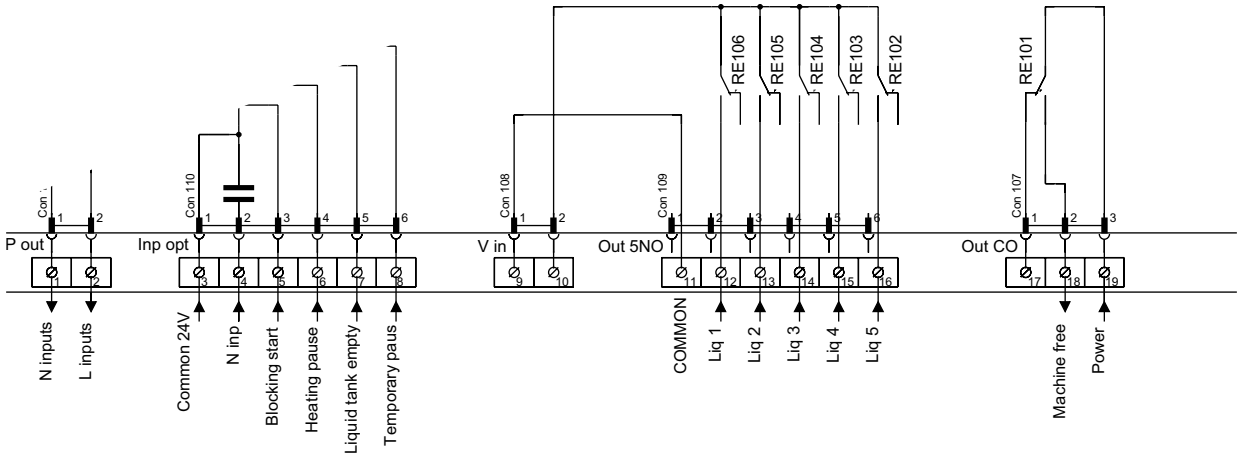

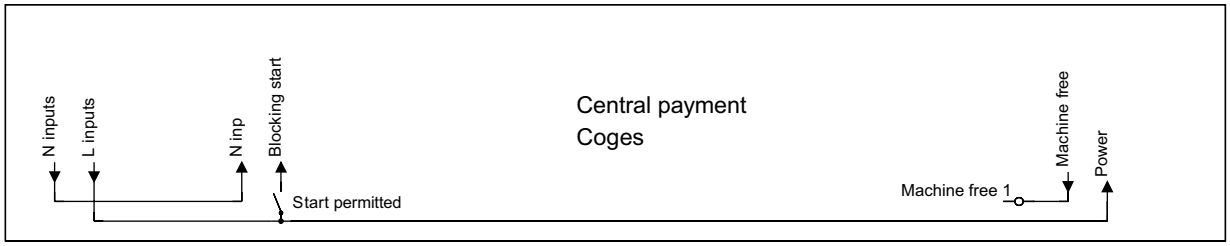

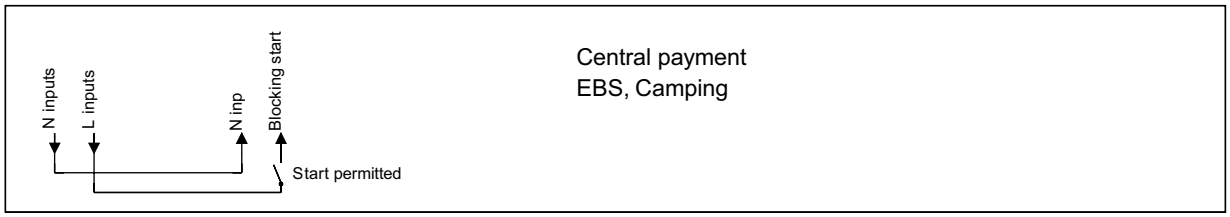

6313

- The central payment or booking system shall transmit an active (high) signal to the washing machine once permission has been granted to start the machine. The signal must remain active (high) until the machine starts. A feedback signal will be present on connection 18 and remain active (high) whilst the machine door is closed but the wash program has not started. The feedback signal is powered by 230V or 24V from connection 19.

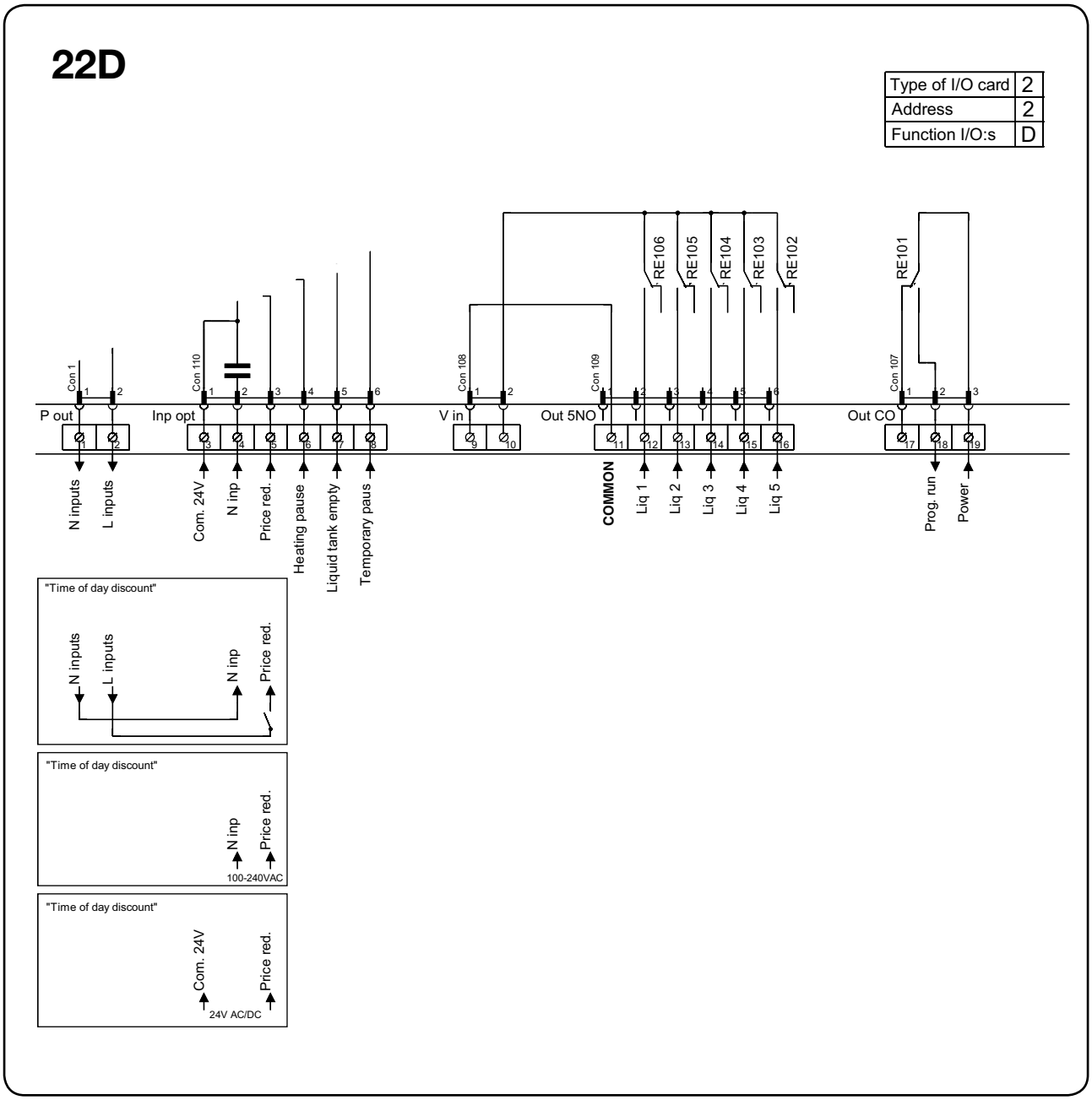

6314

- The figure shows standard function addressing for machines with the 3L41 program package.
- By maintaining an activated (high) signal on connection 5 ("Price red"), the price of the wash program can be reduced. This function has a number of uses, including providing reductions during a specific period of the day. Whilst the signal remains active (high), the price of the wash program is reduced by the percentage entered in the price programming menu.

22E

Type of I/O card	2
Address	2
Function I/O:s	E

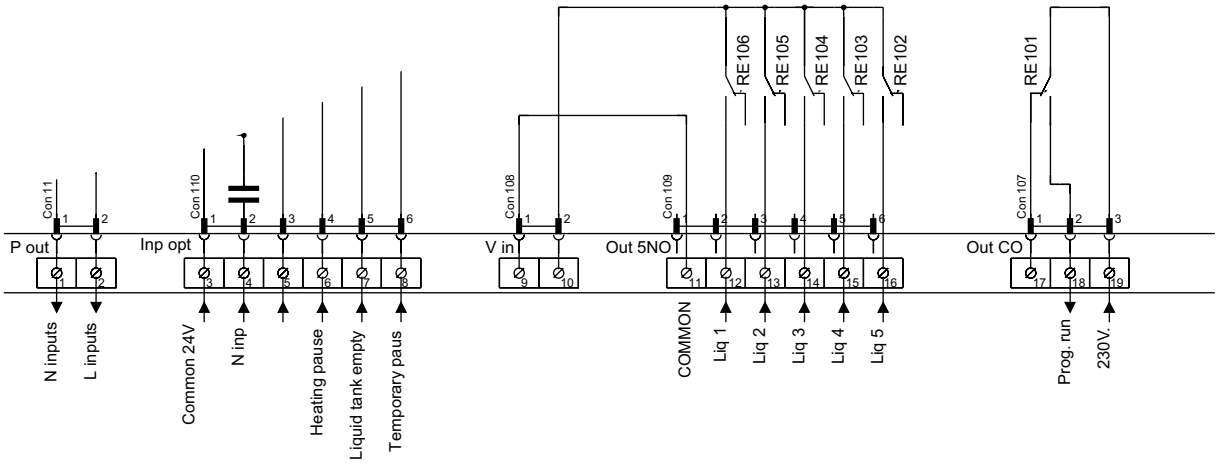

6315

- Heating pause: By connecting a signal to connection 6, you can pause operation of the machine whilst it heats up. The machine will pause for as long as the pause signal remains active (high).

22F

Type of I/O card	2
Address	2
Function I/O:s	F

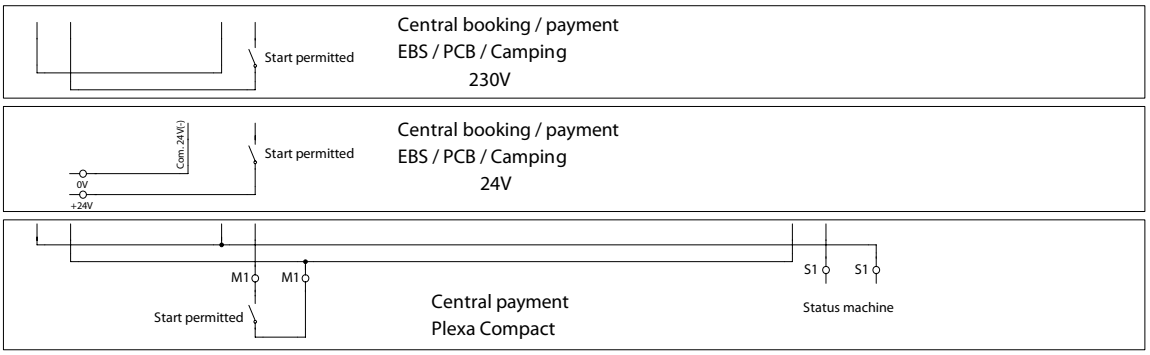

6944

- The central payment or booking system shall transmit an active (high) signal to the washing machine once permission has been granted to start the machine. The signal must remain active (high) until the machine starts. A feedback signal will be present on connection 18 and remain active (high) whilst the wash program is running. The feedback signal is powered by 230V from connection 19 or external 24V.

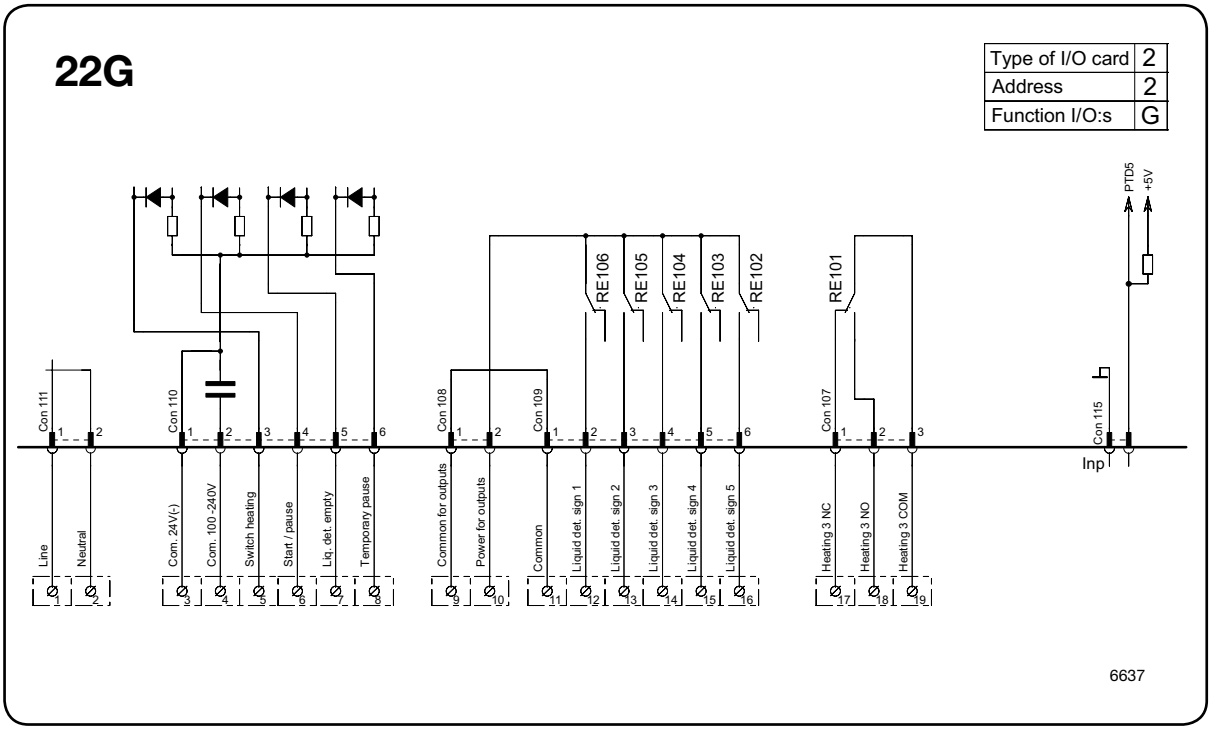

- The gas heating unit must be connected to connections 17, 18 and 19.

Machines with I/O module type 3

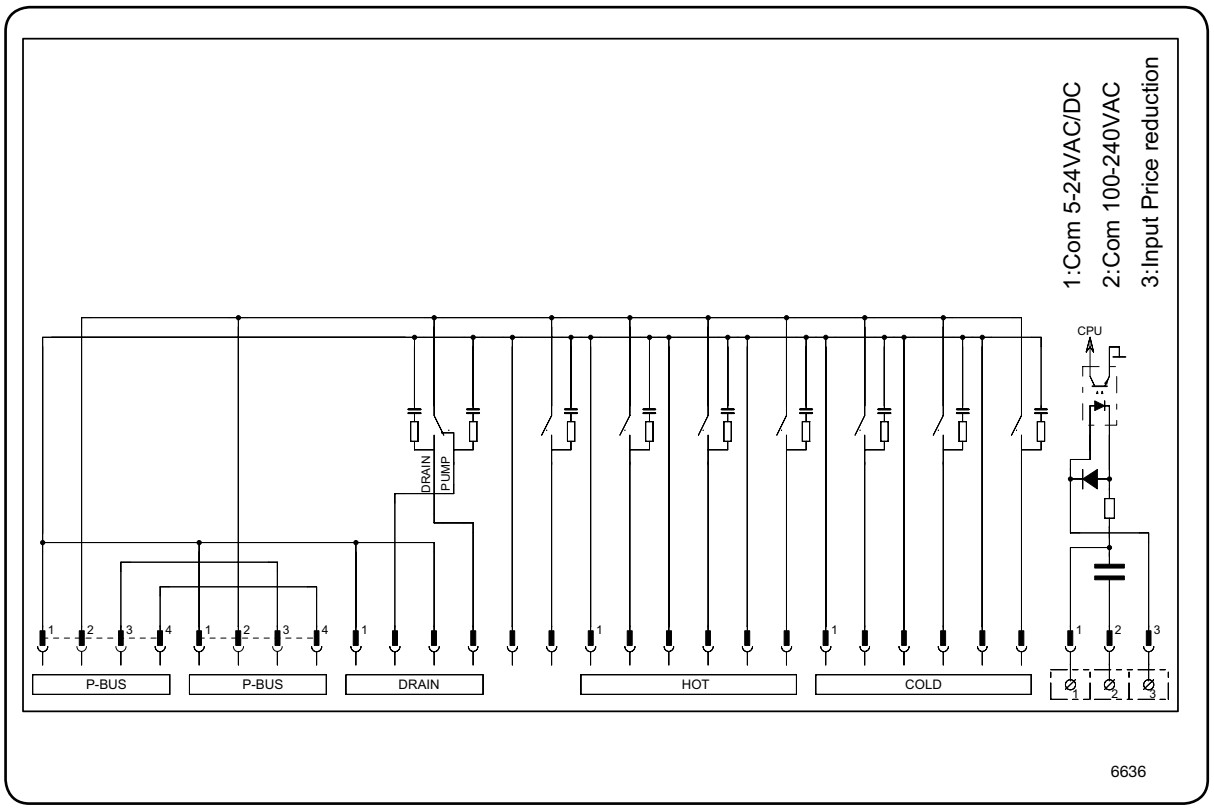

- By maintaining an active (high) signal on connection 3 "Price reduction", the price of the wash program can be reduced. This function has a number of uses, including providing reductions during a specific period of the day. Whilst the signal remains active (high), the price of the wash program is reduced by the percentage entered in the price programming menu.

Addressing I/O modules

After replacing an I/O module or in instances where a second module has been added to a washing machine, the new I/O module must be addressed in order to activate its function options. The function options of the module are controlled by the parameter software loaded on the relevant program device.

- Engage the machine's service mode.

(18) • Highlight the I/O ADDRESS line in the main menu and press the knob.

(19) The display will now show an 8-digit code.

- Call authorised service and quote the code.

Authorised service will then assign a pass code.

- Enter the code you have been given and press the knob.

The I/O ADDRESS menu will appear in the display.

(20) • Select wether an I/O module shall be addressed or removed.

(21) • If addressed, highlight the I/O module and press the knob.

(22) • Press the service switch on the I/O module indicated in the display.

- Where multiple I/O modules are to be addressed, repeat the procedure for the relevant modules.
- Exit the service program.
- If removed, follow the instructions on the screen and press the service switch on the I/O module to be removed.
- Where multiple I/O modules to be removed, repeat the procedure for the relevant modules.
- Exit the service program.

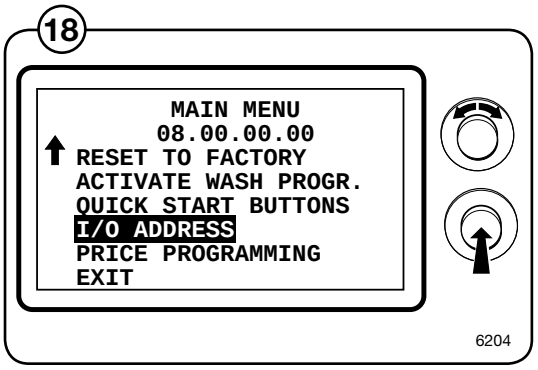

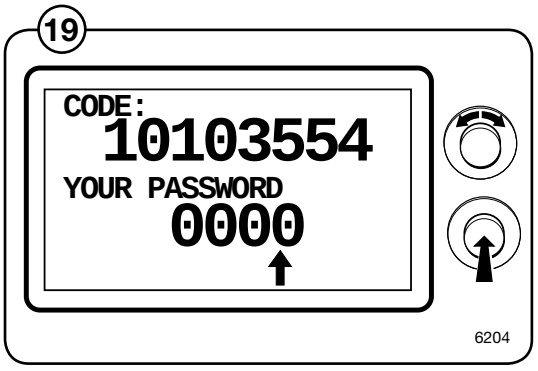

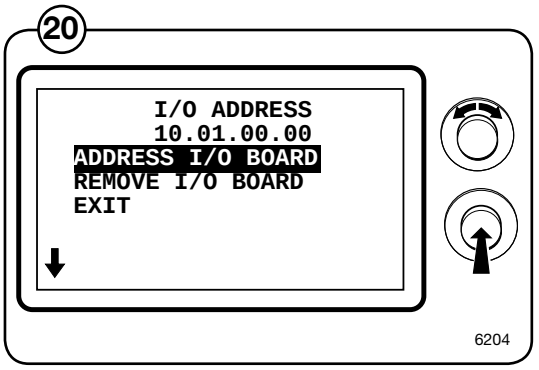

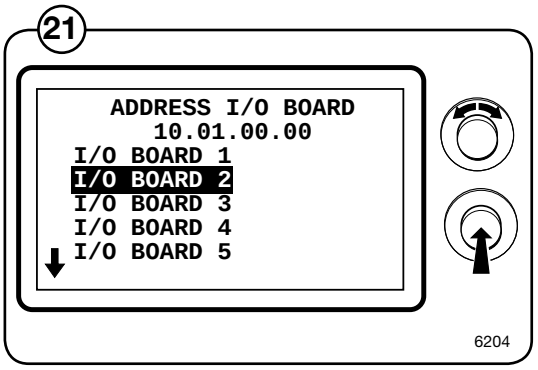

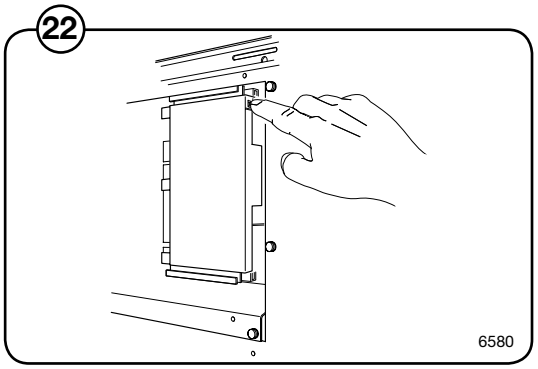

Door and door lock

Description

(1) The door locks consists of the following:

- **Door lock**, which contains
  - An **actuator** that locks the door lock and also has two built-in micro switches, S4a and S4b. The actuator is bi-stable, i.e., it has two stable positions: locked door and unlocked door. The actuator must receive a pulse to lock and unlock the door lock. S4a and S4b are both closed when the door is locked.
  - A **micro switch S3** that is closed when the door is closed.
  - An **emergency opening button** that can be used to open the door lock in an emergency.

(1)

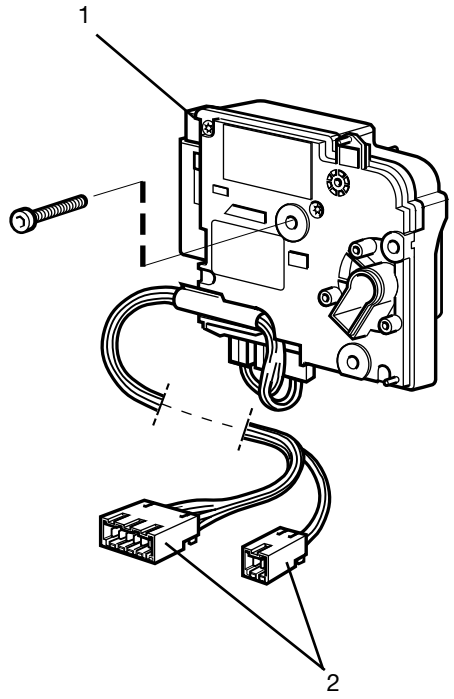

1. Emergency opening button
2. To programme unit A1

6112

Function

The door lock locks the door

(2) When the door is closed (closed door lock switch S3), the programme unit may request door locking by applying a voltage of 200-240 V on the door lock controller A31 input X92.

The following check is made by the A31 card prior to locking of the door:

- **No water in drum** - input "level" from level guard B2 is closed = 0 V
- **Drum not turning** - pulse frequency on input "Tacho" from rotation sensor B3 less than 0.4 Hz.

When the above conditions are met, the card A1 outputs a closing pulse on output D0 to the door lock actuator/coil, which then locks the door. The micro switches S4a and S4b in the actuator/door lock are closed when the door is locked. These micro switches feed voltage to:

- **The output relays** on the programme unit card. The relays control the machine's drain and water valves as well as heater switch-on.
- **Interlock signal** for motor control (input X302) that releases the motor start prevention state.

Programme operation is now possible.

(2)

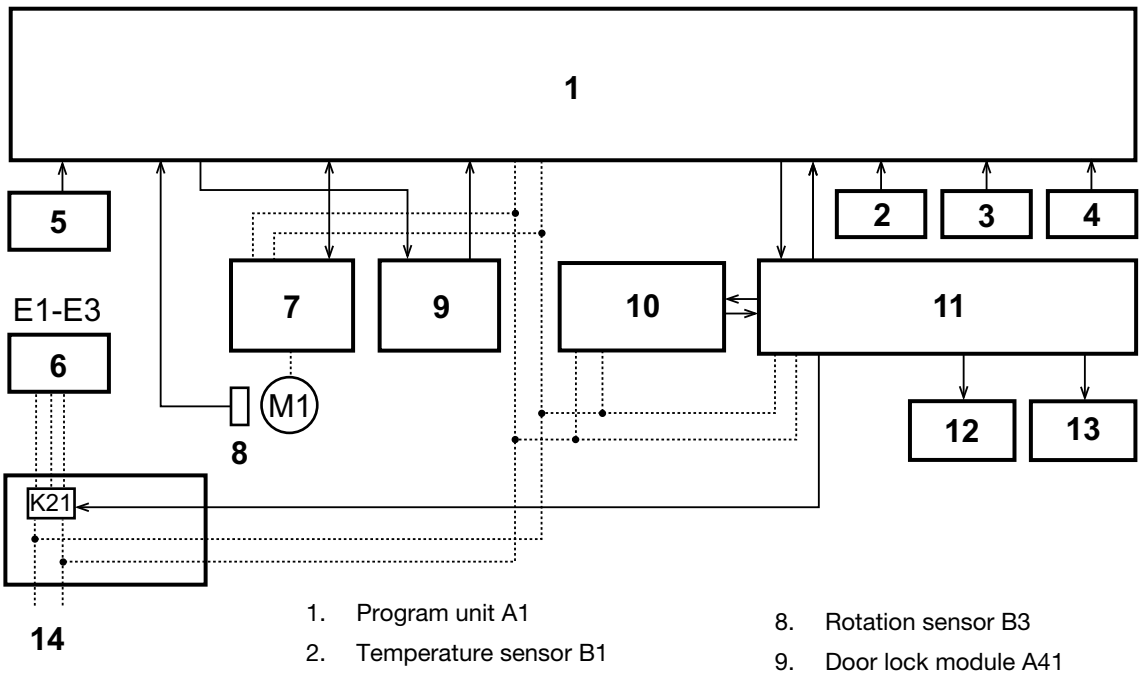

1. Program unit A1
2. Temperature sensor B1
3. Level switch B2
4. Level switch B4
5. Display A2
6. Heater element E1 -3
7. Motor control U1
8. Rotation sensor B3
9. Door lock module A41
10. Voltage unit A5, PSU
11. I/O board
12. Watervalves
13. Drain valve
14. Power supply

The door lock unlocks the door

(3) The programme unit requests door unlocking by applying 0 V on input X92 of the door lock controller.

The following check is made prior to unlocking of the door:

- **No water in drum** - input "Level" from level guard B2 is closed = 0 V
- **Drum not turning** - pulse frequency on input "Tacho" from rotation sensor B3 is less than 0.4 Hz.

When the above conditions are met, the door lock controller outputs an opening pulse on output D0 to the door lock actuator/coil, which then unlocks the door. Micro switches S4a and S4b now interrupt the actuator/ door lock and the I/O card 1 relays lose all voltage to prevent the motor from starting (interlock signal on motor controller input X302). The drain and water valves of the machine are now disabled and the heater and motor cannot be switched on.

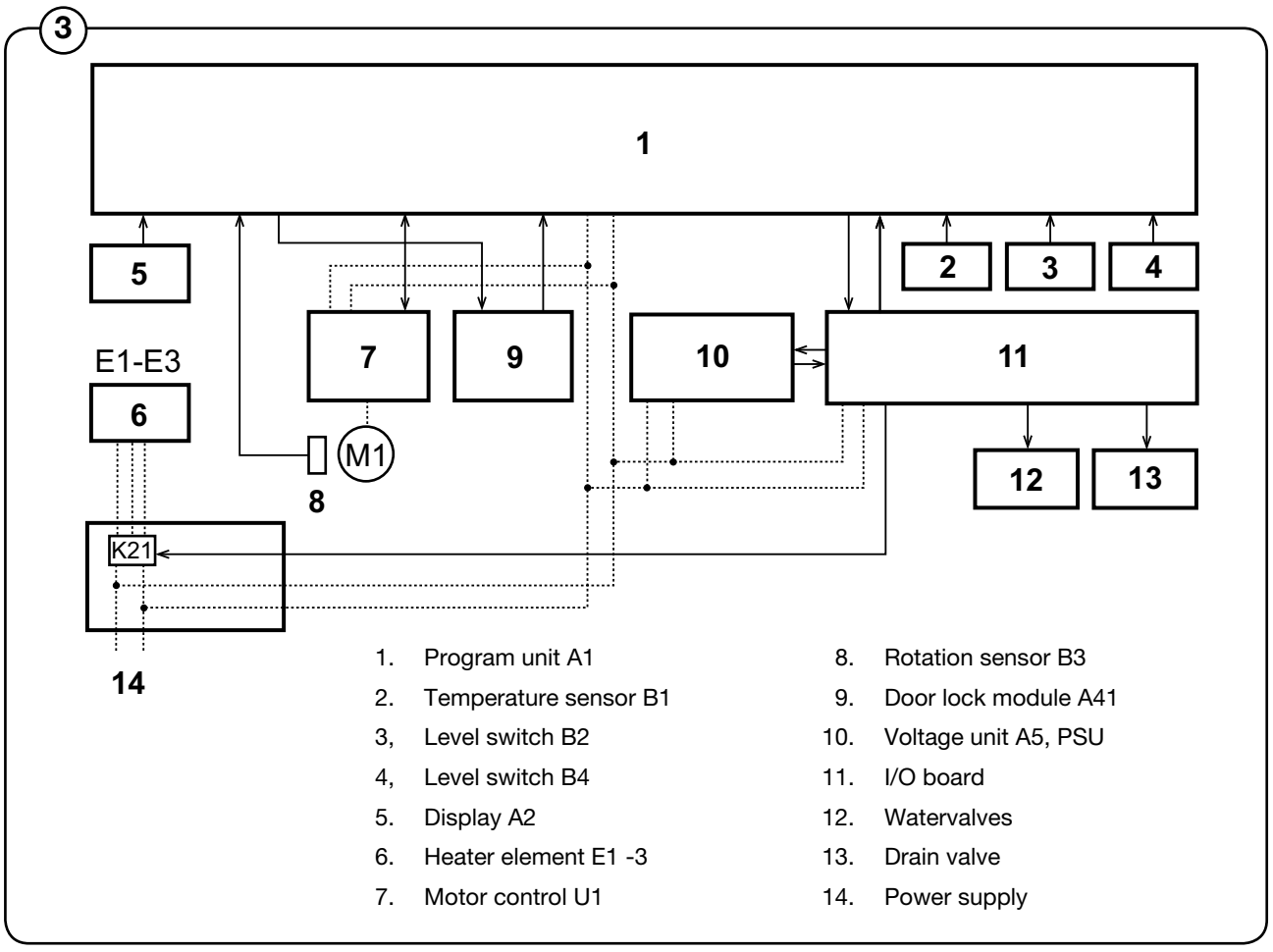

1. Program unit A1
2. Temperature sensor B1
3. Level switch B2
4. Level switch B4
5. Display A2
6. Heater element E1 -3
7. Motor control U1
8. Rotation sensor B3
9. Door lock module A41
10. Voltage unit A5, PSU
11. I/O board
12. Watervalves
13. Drain valve
14. Power supply

Repairs

Repair work on the machine should only be done by specially trained personnel.

Emergency opening of door lock

(4)

1. Take down power from the machine by turning the main power switch to the 0 position.
2. Remove the front cover or top cover. When replacing the door lock, it is recommended to remove the front cover.
3. Press down the emergency opening button.

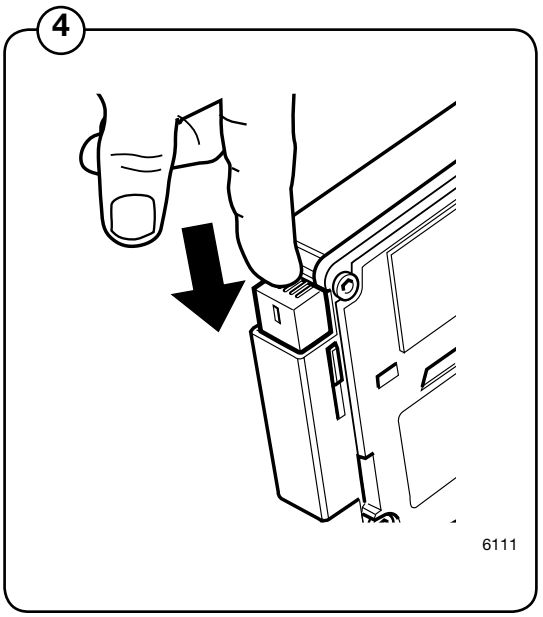

Replacing the door lock

1. Take down power from the machine by turning the main power switch to the 0 position.
2. Remove the front cover alt. side pole.
3. Remove the door (two screws in each hinge).
4. Remove the front panel.
5. Remove the door lock (three holding screws).
6. Verify the strap positions on the cable for the lock. Cut the necessary straps to undo the cables leading to the lock.
7. Undo the connectors.
8. Replace the door lock.
9. Reconnect the new (door) lock.
10. Assemble in reverse order.
11. Strap the cables for the lock according to the notes made in step 6.

Motor and motor control

Warnings

DANGER

Be careful when measuring the electric components in the motor control. All components have a potential difference of approx. 300 V in relation to protective earth and neutral.
When the green LED on the motor control card is lit, the components carry dangerous voltages.
The motor control lose all voltage about 10-30 seconds after the voltage has been disconnected and the motor has stopped.

Description

Motor

(1) The motor is fitted in a bridge carrier under the outer drum. It drives the washing drum using a drive belt.

The motor is frequency-regulated and is controlled by a microcomputer control. The various speeds for normal operation, distribution speeds and extraction as well as acceleration/ retardation can be controlled with a high degree of precision.

The motor winding is protected against overload due to the fact that the motor control unit monitors the winding resistance of the motor.

The motor is connected directly to the motor controller via a cable with quick connectors.

This cable contains two fuses and a VDR-resistance. The size of the fuses are different depending on machine size.

W465H, W475H, W4105H	10A
W4130H	15A
W4180H, W4240H, W4300H	20A
W475S, W485S, W4105S, W4130S	10A
W4180S	15A
W4250S, W4330S	20A

For W475N and W485N the fuses are in the PSU unit and the cable has only a VDR-resistance.

W4105N, W4130N	10A
W4180N	15A
W4250N, W4330N	20A

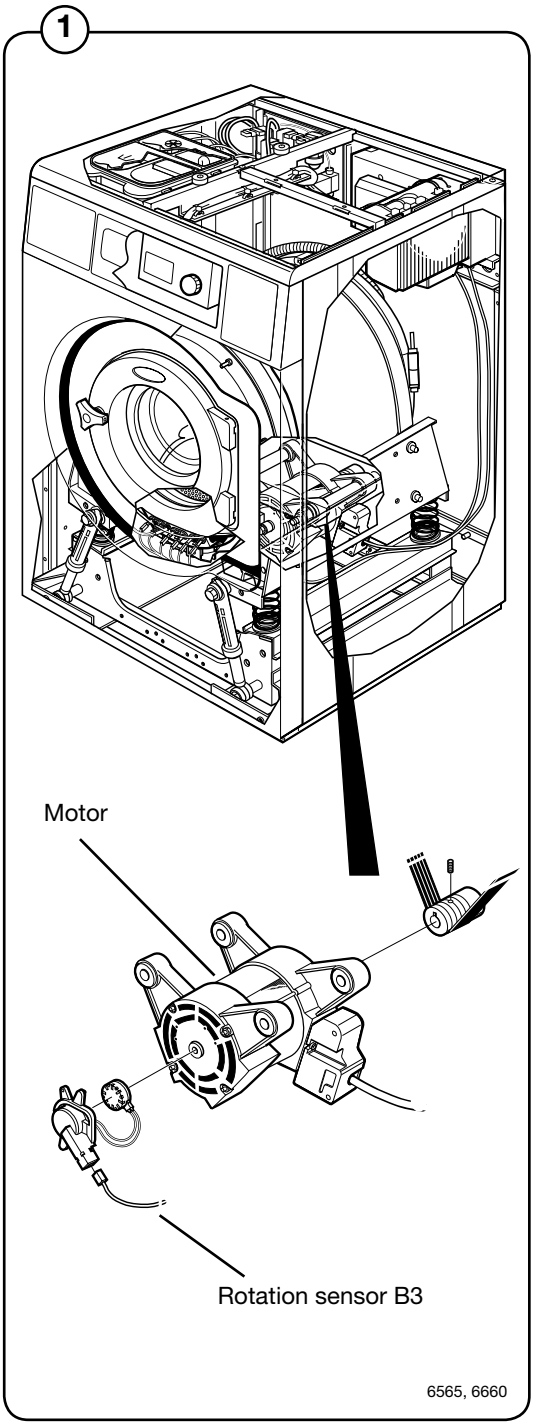

Motor control

(2) The motor control unit is microcomputer controlled and is situated under the top cover of the machine, right above the outer drum.

The unit consists of a PCB (mother board) fitted on a heat sink that does double-duty as part of the housing.

The cable harness is directly connected to the PCB, voltage supply input and the voltage supply to the motor using connectors; the other cables are connected with flat connectors to the PCB.

A detailed description of input and output cables is presented in the section “Function”.

Depending on the machine size, this unit comes in four different versions. The units have different sizes in order to be able to control motors of different sizes. Larger machines also have ventilation fans, however the function and connections are identical.

(2)

Motor control U1

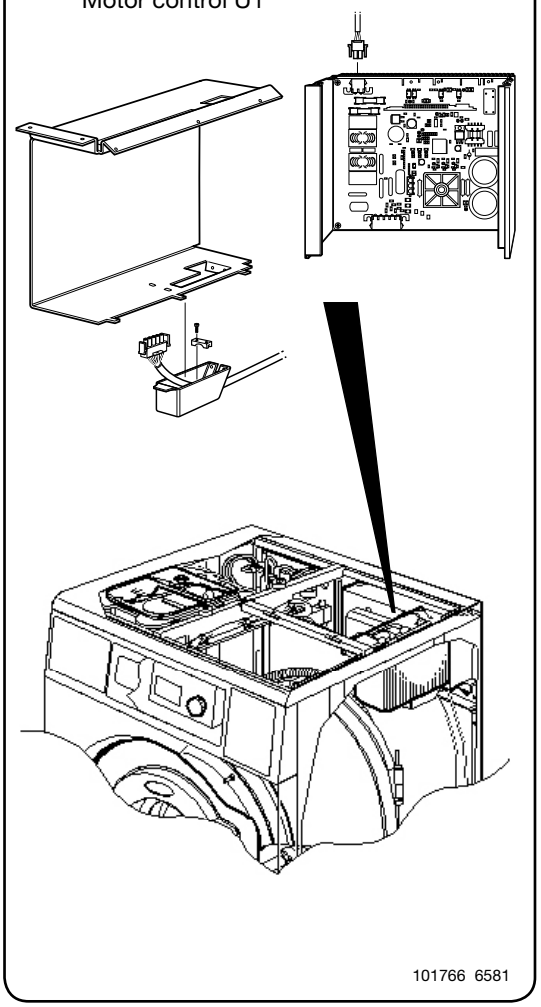

101766 6581

Function

DANGER

Be careful when measuring the electric components in the motor control. All components have a potential difference of approx. 300 V in relation to protective earth and neutral.
When the green LED on the motor control card is lit, the components carry dangerous voltages.
The motor control lose all voltage about 10-30 seconds after the voltage has been disconnected and the motor has stopped.

(3) The motor control communicates with the programme unit via a serial two-way interface. With the help of the motor control, the programme unit can control not only the instantaneous motor rpm, but also with high precision the acceleration and retardation of the motor in order to reach the target rpm. The motor control continuously replies with information to the programme unit PCB regarding the current operating state and sends reports if an error occurs.

(3)

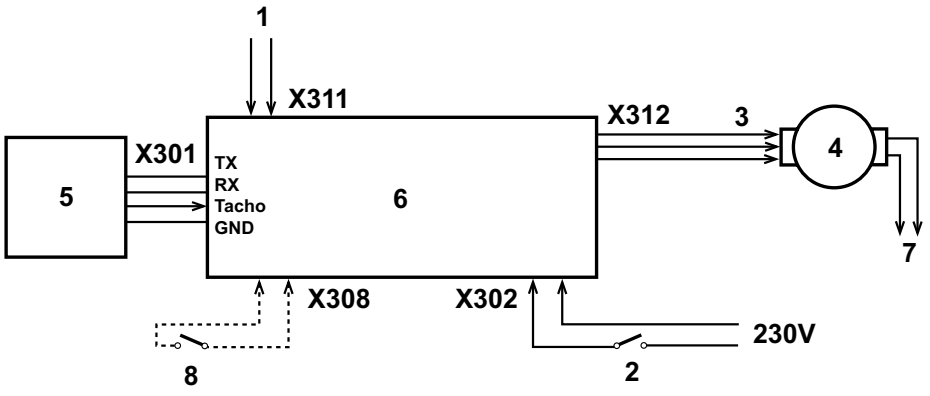

1. Voltage supply
2. Door lock switch
3. Feed, motor
4. Motor
5. Programme unit A1
6. Motor control U1
7. Tacho signal
8. Imbalance switch

6661

The motor control is also able to deliver the various instantaneous and output values during constant speed, acceleration and retardation. These values are used to calculate the weight of the loaded laundry and to detect any load imbalances. A separate unbalance switch can also be connected to the motor control.

When the drum in a drain sequence starts its acceleration from wash rpm to distribution rpm, the extreme unbalance measurement will start once about 90% of the distribution rpm has been attained. Subsequently, during the entire remaining super unbalance measurement, the distribution time and during the entire subsequent extraction time, the program unit will detect whether there is any extreme unbalance.

In case of extreme unbalance that can arise if e.g. a spring strut is defective or when washing in sacks, the acceleration will be stopped to wait for the drum to stop. If extreme unbalance arises during:

a. distribution or during super unbalance measurement, the drain sequence will restart from the beginning. The number of restart attempts can be changed in the system data but is usually set to 5. The value can also be changed via configuration 2.
b. extraction, the program will stop and move to the wash sequence after extraction.

The safety system of the machine includes double detection of the door lock. Both the programme unit and motor control use different switches to detect proper door locking. The motor cannot start unless both switches verify the door is locked.

Inputs and outputs

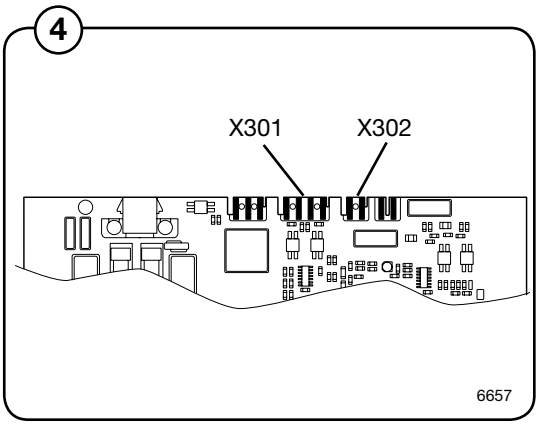

(4) **X301: Serial communication**

Handles communication between the motor control and the programme unit. Using a special interface, it is possible to connect a PC for testing the motor control.

Card No.	Function
X 301:1	Tacho signal
X 301:2	Gnd
X 301:3	Txd
X 301:4	Rxd

X302: Lock sequence input

Detects when the door is locked or unlocked. The motor cannot start until the door has been locked. If the indication disappears when the motor is operating, the motor stops and an error message is shown on the programme unit display.

Input voltage			
	min:	120 V-20 %	50/60 Hz
	max:	240 V+15 %	50/60 Hz
Current:	max:	0,01 A	

X308: Imbalance switch

Input from the imbalance switch (only fitted on some machines). The imbalance switch is normal open.

Input voltage			
	min:	120 V-20 %	50/60 Hz
	max:	240 V+15 %	50/60 Hz
Current:	max:	0,01 A	

X311: Voltage supply

Input voltage, single phase or rectified three-phase	
min:	200V-15%
max:	240V+10%

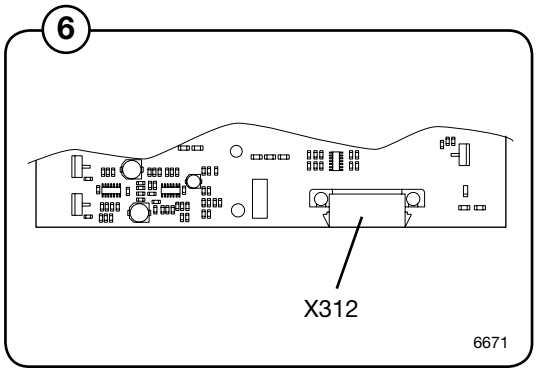

(6) **X312: AC supply to motor and input from the motor thermal protector**

The motor is fed with alternating current with varying frequency that is proportional to the motor speed.

W465-W4130

Card No.	Function
X 312:1	AC supply to motor, phase 1
X 312:2	AC supply to motor, phase 2
X 312:3	AC supply to motor, phase 3

W4180-W4240

Card No.	Function
X 312:1,2	AC supply to motor, phase 1
X 312:3,4	AC supply to motor, phase 2
X 312:5,6	AC supply to motor, phase 3

LED indications

Two LEDs, one yellow and one green, indicate status and any errors on the motor controller and motor.

(7) The table below shows the blinking patterns of the various error codes.

(7)

Green LED

LED blinking pattern	Cause
	OK blink (brief pause every 5 seconds)
	Microcomputor in motor control unit not working, voltage is on.
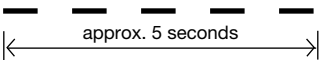	Current limiter of motor control has switched on.

Yellow LED

LED blinking pattern	Error code on display		Cause
	31E	HEATSINK TOO HOT	Overheated heat sink on motor control.
	32E	MOTOR TOO HOT	Motor thermal protector has triggered.
	33E	NO INTERLOCK	Motor controller receives start request, but receives no lock ACK (input 302).
	13E	NO MOTOR COMM.	Communication error motor control - programme unit.
	-	-	Short-circuit in motor winding, harness or internally in motor control. Motor control restarts automatically.
	35E	MOTOR SHORTNING	Short-circuit in motor winding, harness or internally in motor control.
	36E	INTERLOCK HARDWARE	Error in lock ACK circuits in motor controller.
	37E	LOW DC VOLTAGE	DC level in motor control too low.
	38E	HIGH DC VOLTAGE	DC level in motor control too high.
	45E	MOTOR NOT FOLLOW	No tacho signal, the motor is not turning over.

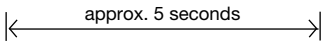

Repairs

Repair work on the machine should only be done by specially trained personnel.

Motor replacement

Disassembly

1. Take down power from the machine.
2. Remove the rear cover.
3. Undo the bracket for the drain hose connector from the lower rear piece, then remove the rear cover.
4. Undo the ground connection from the motor.
5. (8) Remove the drive belt by pulling the belt towards you while rotating the drum by hand.
6. Undo the motor cable from motor.
7. Lock the motor in place to avoid it from falling when lifting it out.
8. Undo and remove the two motor mounting bolts.
9. Lift out the motor.
10. Replace the sensor and magnet from the old motor into the new one.

Assembly

1. Fit the new motor **without** locking the mounting bolts.
2. Fit the drive belt and adjust the belt tension with the tensioner on one side of the motor. Se section Adjustments - Drive belt tension for details.
3. Connect the new motor to the cable and use straps to secure the cable.
4. Connect the motor cable to the motor.
5. Fit the lower rear piece and secure the drain hose connection with screws.
6. Fit the upper rear piece.
7. Connect the voltage supply and verify that the motor operates normally.

(8)

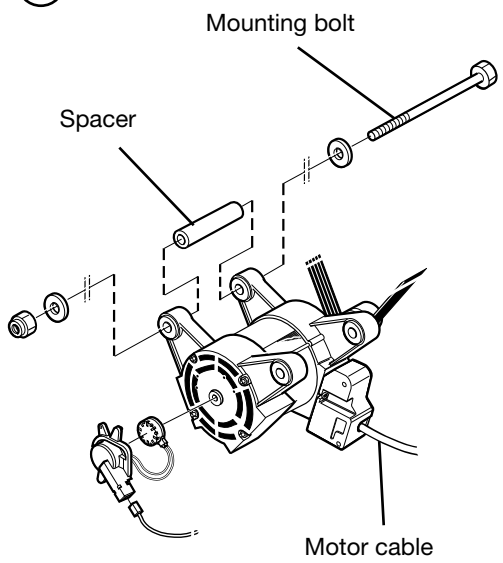

6662

H – model

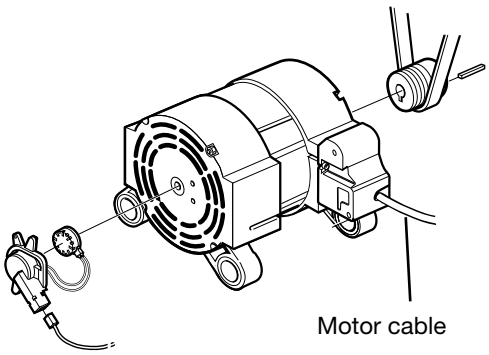

6663

S och N – model

Adjustments

Drive belt tension

The drive belt is pre-tensioned upon delivery from the factory.

The drive belt tension should be as follows:

(9)

Model	Force A (N)	Post tensioning B (mm)	New belt C (mm)
W465H*	30	9	8
W475H*	30	9	8
W465H**	30	8	7
W475H**	30	8	7
W4105H	40	9	8
W4130H	53	10	8
W4180H	68	10	8
W4240H	75	10	8
W4300H	78	10	8

* up to machine No.
** from machine No.

Model	Force A (N)	Post tensioning B (mm)	New belt C (mm)
W475S/N	35	8	6
W485S/N	35	9	8
W4105S/N	40	8	7
W4130S/N	40	8	7
W4180S/N	60	9	7
W4250S/N	68	8	7
W4330S/N	45	8	6

Up to machine No.
-520/111627
520/111641-115133
520/115144-120398
520/120409-121020

(10) To adjust drive belt tension, first undo the motor retaining screw a couple of turns, then press down on the motor to achieve proper tensioning. Lock the locking nut when the tension is correct. Then lock the retaining screw.

(9)

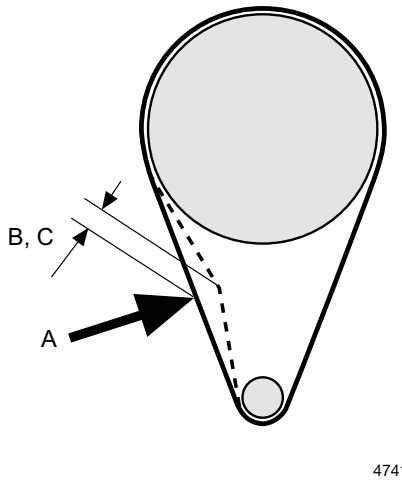

Adjust drive belt tension if values exceed those shown in the table.

(10)

H – model

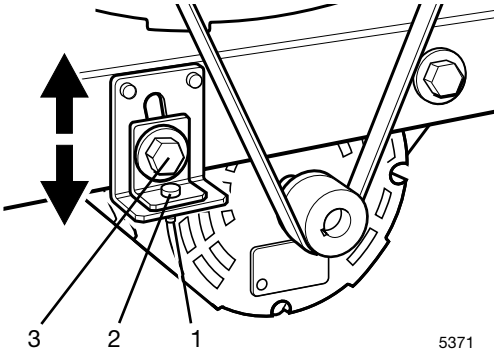

M and N – model

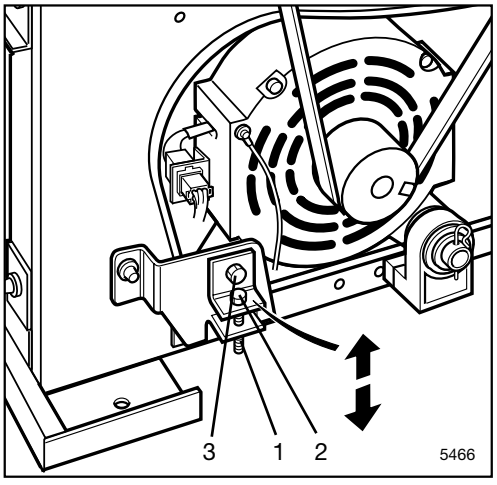

1. Locking nut
2. Adjusting screw
3. Retaining screw for drive belt tension

From machine No.
520/111628-111640
520/115134-115143
520/120399-120408
520/121021-

(11) To adjust drive belt tension: first undo the motor retaining screw (A) by using two cap keys. When
(12) undoing screw (A) use one cap key as holder-on on the screw's nut. Press down the motor by using a screw driver in order to tension the belt. Tighten the retaining screw and check the tension according to table.

Inspection of the drive belt tension is an important part of general maintenance.

11

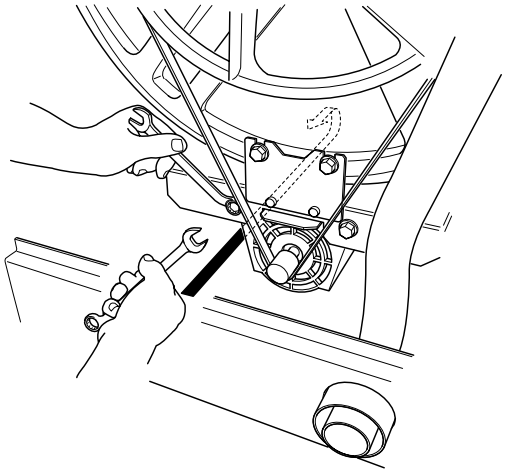

6888

12

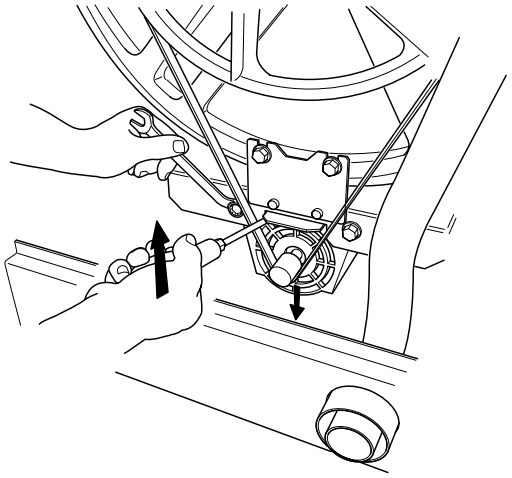

6889

Drain valve

Description

(1) The drain valve is situated on a flange at the bottom of the outer drum and can be accessed from the front after removing the front cover.
The drain valve consists of the following principal parts:

- Lower part with rubber diaphragm.
- Piston and cylinder.
- Pressure plate and recoil springs.
- Rubber diaphragm with drain connection.
- Upper part with connection for outer drum.

(1)

H – model

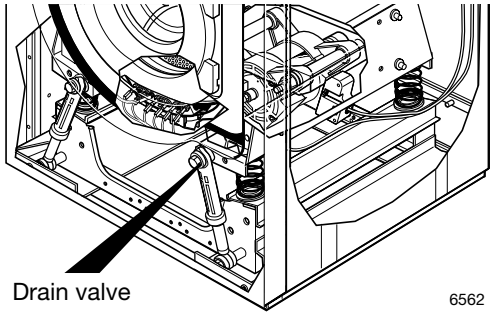

S och N – model

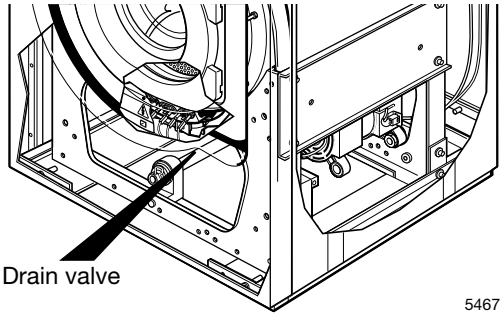

Drain valve

Function

(2) The drain valve uses the water pressure in the cold-water inlet to close the valve. A feed hose is connected between the water inlet and the control valve.

When the control valve operates (drain valve should be closed), the control valve opens the water pressure onto the feed hose, which is connected to the lower part of the drain valve. When the lower part is filled with water, the lower part diaphragm pushes up the piston. The piston lifts the pressure plate against the drain valve rubber diaphragm, which in turn forms a seal against the outer drum, effectively closing the valve.

When the drain valve should be opened, the control valve changes position to allow the water pressure to the lower part of the drain valve to close, instead opening the return hose to the drain. The pressure plate recoil springs pull the pressure plate back, upon which the piston is pressed back into the cylinder. The water from the lower part is fed through the feed hose and the control valve to the drain.

(2)

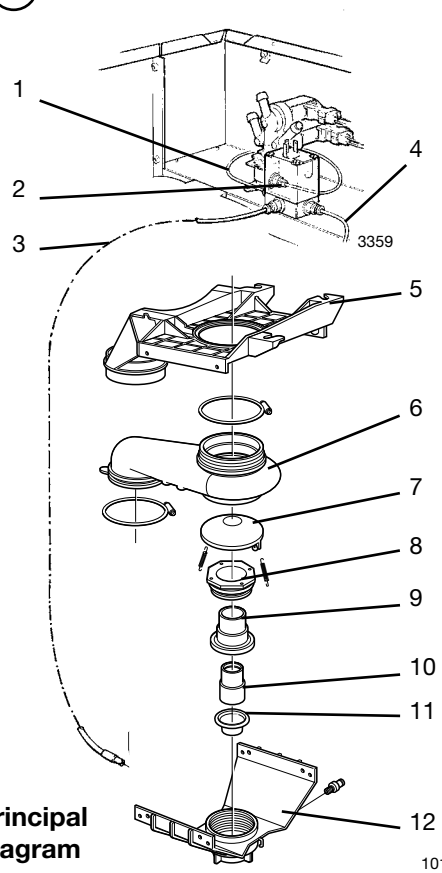

Principal diagram

101772

1. Feed hose
2. Control valve
3. Feed hose
4. Return hose
5. Upper part
6. Rubber diaphragm with drain connection
7. Pressure plate
8. Recoil springs
9. Cylinder
10. Piston
11. Diaphragm
12. Lower part

Repairs

Repair work on the machine should only be done by specially trained personnel.

Disassembly

For repair works on the drain valve, there is a risk that water still left in the machine may flood onto the floor. Be sure to dry up any spilled water since it may cause people to slip and hurt themselves.

1. Take down power from the machine.
2. Remove the front cover.
3. (3) Disconnect the drain hose from upper part of the valve.
4. Undo the hose clamp holding the valve rubber bellows against the sleeve coupling of the outer drum.
5. (4) Loosen and unscrew the 4 retaining nuts of the valve a couple of turns (use a socket, extender and ratchet wrench). Turn the valve and unhook it from the bolts.
6. Disconnect the pressure hose from the lower part of the valve.
7. Replace the valve with a new one or replace the defective part.

3

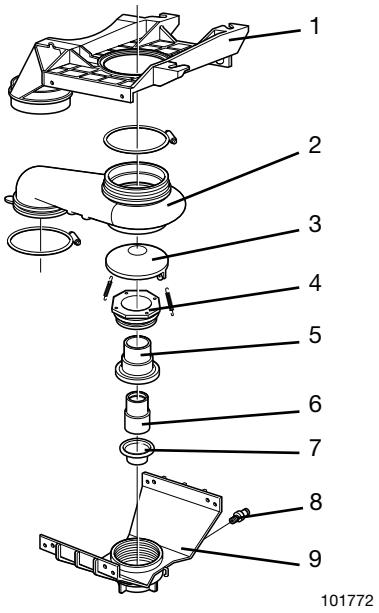

1. Upper part
2. Rubber diaphragm with drain connection
3. Pressure plate
4. Recoil spring
5. Cylinder
6. Piston
7. Diaphragm
8. Nipple for connection of feed hose from control valve
9. Lower part

4

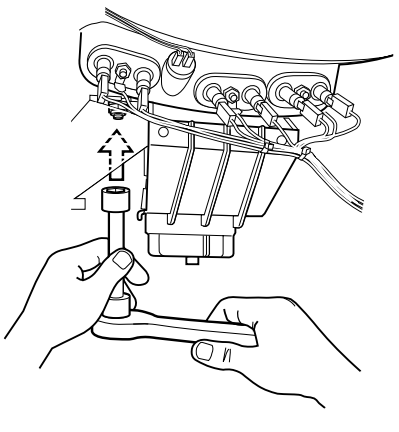

Drain valve

Assembling

(5) 1. Connect the pressure hose to the lower part of the valve. Verify that the hose is not bent or pinched.

(6) 2. Fit the rubber bellows onto the sleeve coupling.

3. Hook the valve onto the bolts and turn the valve into position. Secure the 4 retaining bolts of the valve.

4. Secure the hose clamp at the connection of the rubber bellows on the sleeve coupling.

5. Connect the drain hose to the upper part of the valve.

6. Turn on the main power to the machine and verify correct valve operation and that it does not leak.

7. Reattach the front cover.

(5)

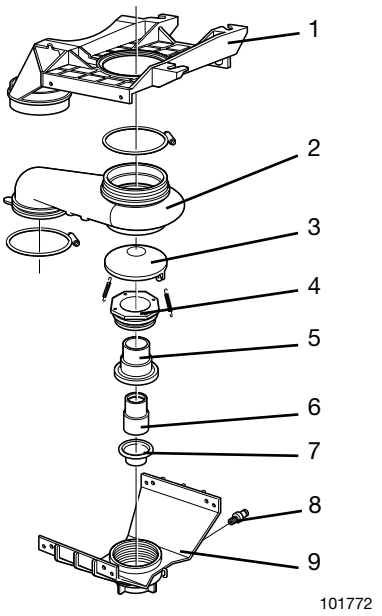

1. Upper part
2. Rubber diaphragm with drain connection
3. Pressure plate
4. Recoil spring
5. Cylinder
6. Piston
7. Diaphragm
8. Nipple for connection of feed hose from control valve
9. Lower part

(6)

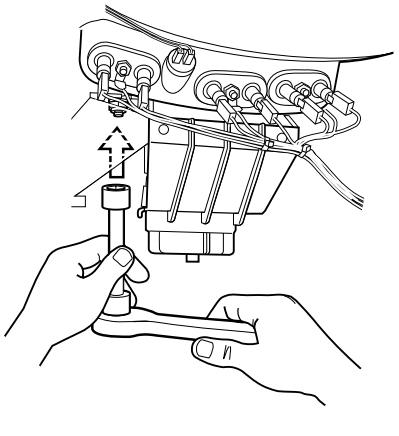

Detergent compartment

Description

(1) The detergent compartment of the machine is designed for use with powder and liquid detergent. The compartment is divided into four sub-compartments as follows:

(2)
- Compartment 1 - For pre wash with powder or liquid detergent.
- Compartment 2 - For main wash with detergent powder.
- Compartment 3 - Rinse.
- Compartment 4 - Main wash with liquid detergent or, bleaching-agent.

The connections for incoming water are situated on the rear side of the compartment. Compartments 3 and 4 each have one connector, while compartments 1 and 2 each have two connectors, one for cold water, the other for warm water.

The detergent is routed from the bottom of the compartment to the outer drum through the combo module immediately behind the compartment.

To safeguard against overfilling, e.g., due to a blocked hose on its way to the drum, the combo module features an overflow drain directly connected to the drain of the machine.

(1)

Detergent compartment

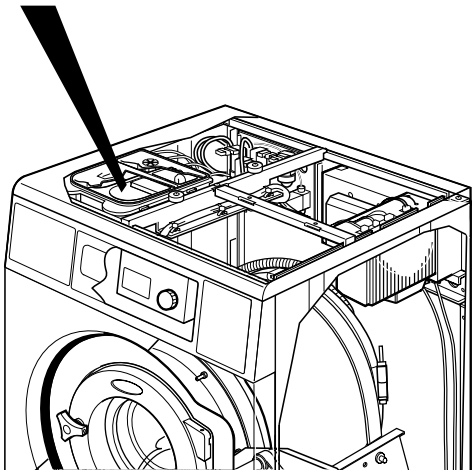

6562

(2)

1. Compartment 2: Main wash, powder detergent
2. Compartment 4: Main wash, liquid detergent or bleaching-agent
3. Water connections
4. Overflow drain
5. Water connections
6. To washing drum
7. Compartment 3; Rinse
8. Compartment 1: Pre-wash with powder or liquid detergent

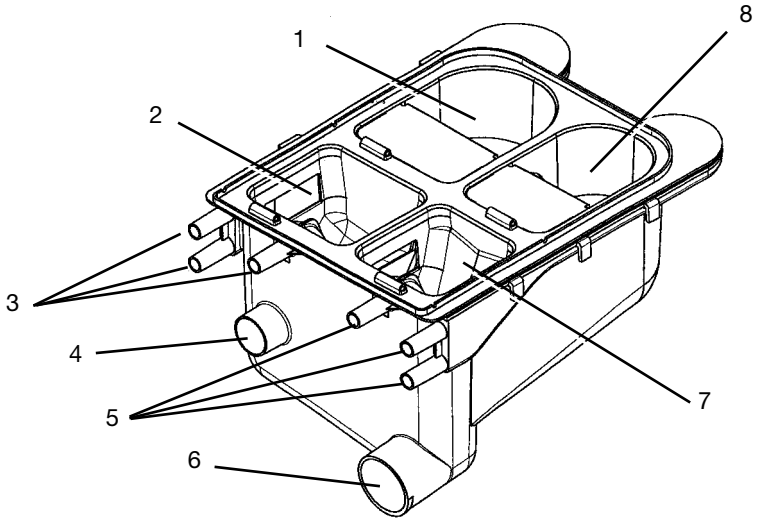

5209

Heating

Description

Electric heating

(1) The heating system of the machine consists of:

- Three heating elements for heating the water in the drum.
- A temperature sensor to detect the water temperature in the drum.
- One or two heating contactors for switch-on/ switch-off of the heating elements.

The heating elements and the temperature sensor are situated at the bottom of the outer drum close to the edge. They can be accessed front the front after the front plate is removed.

The contactor(s) is(are) placed in the rear control unit.

Depending on the size of the machine, the following heating elements are shown as example. Further is available.

Machine model	Heating element size (kW)
W465H	3 x 0.665, 3 x 1, 3 x 1.8, 3 x 2.5
W475H	3 x 0.665, 3 x 1, 3 x 1.8, 3 x 2.5
W475N/S	3 x 0.665, 3 x 1, 3 x 1.8, 3 x 2.5
W485N/S	3 x 0.665, 3 x 1, 3 x 1.8, 3 x 2.5
W4105H/N/S	3 x 2.5 3 x 3.3
W4130H, W4180N/S	3 x 2 x 2.165
W4130N/S	3 x 2.5 x 3.3
W4180H, W4250N/S	3 x 2 x 3.0
W4240H	3 x 2 x 3.83
W4300H, W4330N/S	3 x 2 x 3,83

(1)

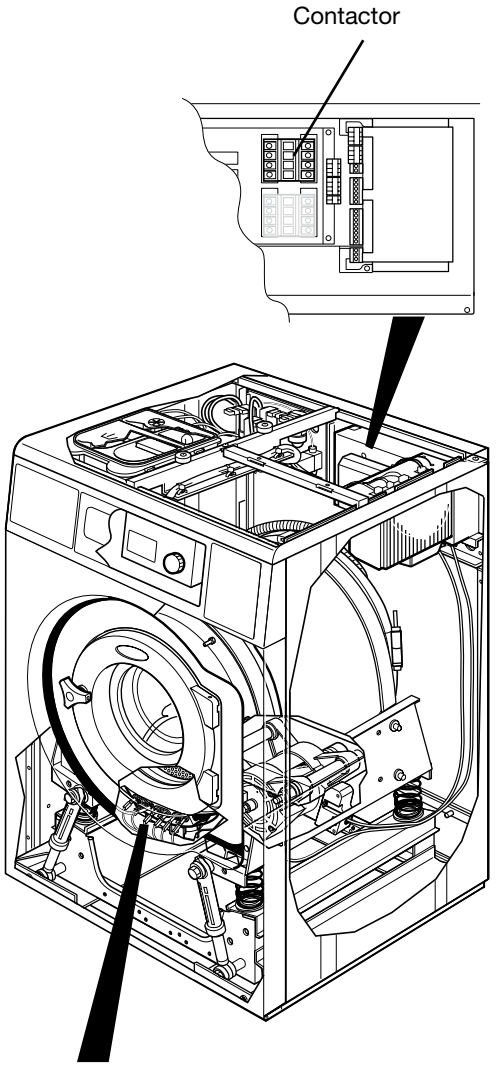

Heating elements and temperature sensor

6562, 6578

Function

Electric heating with fusible cut-out on element

(2) The three heating elements in the machine are connected to separate phases and are switched on and off using one or two heating contactorrs, K21 och K22 (two contactors are used for higher heating power). The heating contactors are controlled by the programme unit A1, output (X36:7).

The programme unit receives information on the water temperature in the machine through an analogue signal from the temperature sensor situated in the outer drum. The programme unit controls the heating contactors to achieve the set water temperature for the current washing programme.

When there is no water in the drum, the programme unit prevents switch-on of the heating elements. If an error would nevertheless cause the elements to switch on, a slow-blow fuse triggers to switch them off again. Then the heating elements has to be changed.

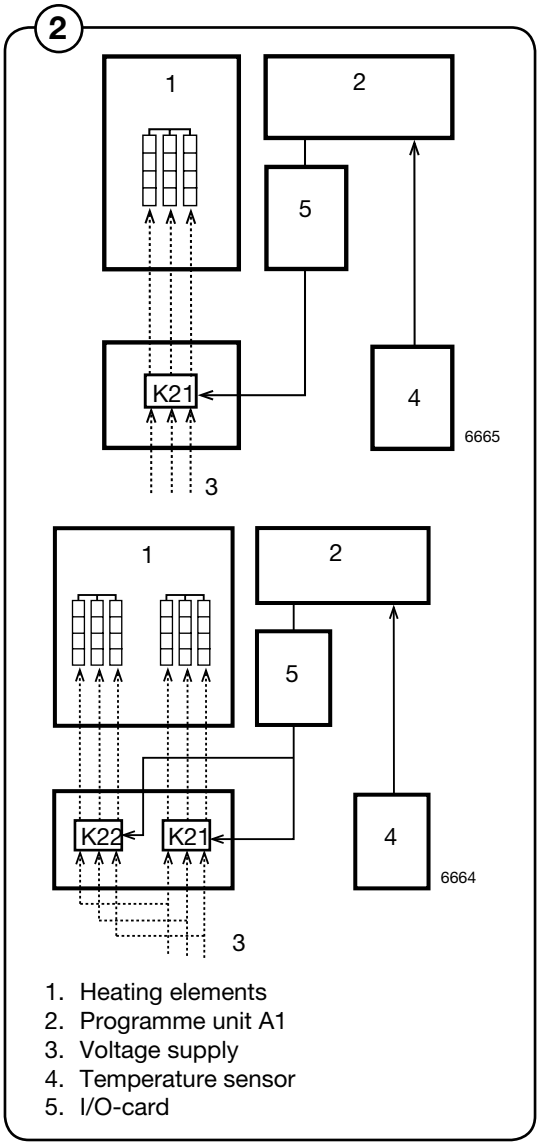

1. Heating elements
2. Programme unit A1
3. Voltage supply
4. Temperature sensor
5. I/O-card

Function (machines built for mop washing)

Electric heating without fusible cut-out on element

(3) The three heating elements in the machine are connected to separate phases and switched on and off using two serial heating contactors. Heating contactor K21 is controlled by programme unit A1, output (x36:7). Heating contactor K22 is regulated by a standalone mechanical level control. In order for both contactors to be activated, the level in the machine must have been approved by both the level control in programme unit A1 and the mechanical level control.

The water level in the machine must be 90 scale units or more in order for the mechanical level control to be activated.

The programme unit receives information on the water temperature in the machine through an analogue signal from the temperature sensor situated in the outer drum. The programme unit controls the heating contactors to achieve the set water temperature for the current washing programme.

The mechanical level control prevents the element from activating if the programme unit orders heat despite the fact that there is no water in the drum.

Steam heating

(4) The steam valve is controlled by the programme unit A1, output (X3 36:7).

3

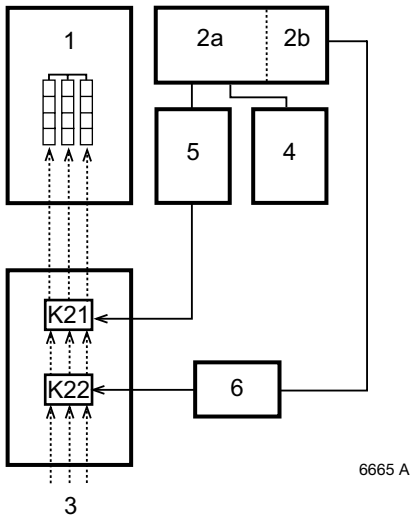

1. Heating elements
2a. Programme unit A1
2b. Interlock signal
3. Supply voltage
4. Temperature sensor
5. I/O Board
6. Level control

4

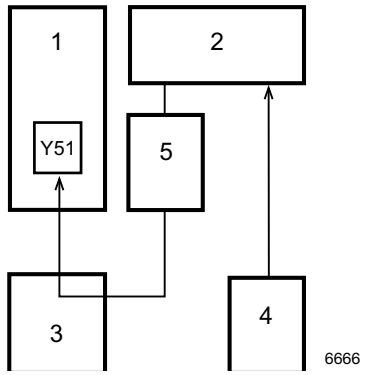

1. Steam valve
2. Programme unit A1
3. Rear control unit
4. Temperature sensor
5. I/O-card

Repairs

Repair work on the machine should only be done by specially trained personnel.

Replacing the heating elements

Wen replacing the heating elements, there is a risk that water still left in the machine may flood onto the floor. Be sure to dry up any spilled water since it may cause people to slip and hurt themselves.

1. Take down power from the machine.
2. Remove the front cover.
3. Make a note of how the heating elements are connected.

(5) 4. Disconnect the connection to the heating element to be replaced.

5. Unscrew the nut between the connections approx. 1 cm.
6. Push on the nut and bolt to undo the expansion bracket from the outer drum.
7. Remove the old heating element and install the new one. Be sure that the rear edge is fitted into the element holder at the rear of the outer drum.
8. Assemble in reverse order.

(5)

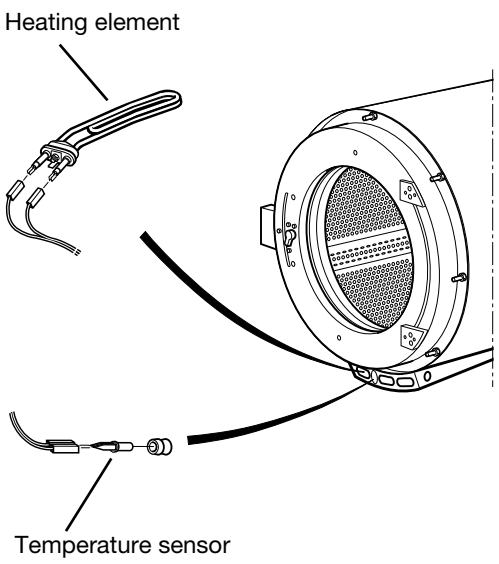

Payment systems

Various systems for payment and booking systems are available.
See below table.

Abbreviation	Explanation
CMS	Coin Meter Single. Supplied with coin meter, single slot.
CMD	Coin Meter Double. Supplied with coin meter, double slot.
CMSL	Coin Meter Single Latch. Supplied with coin meter, single slot. With latch for coin interlock.
CMB	Coin Meter with strong box housing, no coin box.
CMDSL	Coin Meter Double Single Latch. Supplied with coin meter double coin, single slot. With latch for coin interlock.
CME	Coin Meter Electronic. Supplied with electronic coin meter.
PCM	Prepared Coin Meter. Prepared for coin meter.
PCMB	Prepared Coin Meter Box. As PCM but with strong box housing, no coin box.
PCMSB	Prepared Coin Meter Supply voltage Box. As PCM but with power supply and strong box housing, no coin box.
ESS	Electrolux Single System. Supplied with Electrolux Single System for AHL.
PCMX	Prepared Coin Meter eXternal. Supplied with interface for external coin meter.
CPC	Central Payment Coin. Supplied with interface for central payment system. E.g. EFS (Electrolux Flex System). CP/Calcad 80/800/900/1000/2000.
EMS	Electrolux Master System. Supplied with interface for central control EMS.
LM10	Laundry Management. Communicates via the ELS Network
ELS-bokn	Electrolux Laundry System and booking system. Communicates via the ELS Network.

Abbreviation	Explanation
EBSK	Electrolux BokningsSystem Kommunicerande. Supplied with interface for central booking/payment system EBSK.
PCPXS	Prepared Central Payment eXternal Start. Prepared for central payment system with external start, e.g. for the French market.
PCB	Prepared Central Booking. Prepared for central booking/payment system, i.e., Coges, Camping.
EBS	Electrolux Booking System. Prepared for central booking/payment system EBS, also for i.e. Aptus, In-time.
PXS	Prepared eXternal Start. Prepared for external start/pause, e.g. for gas-heated machines.
DELAY	Supplied with timer for delayed start, e.g. on machines with wash programs for Farm/Cow-Cloths.

Abbreviations

Abbreviation	Explanation
DLCU	Door lock control unit
MCU	Motor control unit
RMC	Residual moisture control
MIS	Management information system
CBT	Central payment system
SCU	Scale unit
SW	Software
DMIS	Detergent management system
EMIS	External management information system
CW	Clock-wise
CCW	Counter clock-wise
A/D SCU	Analog/digital scale unit

Preventive maintenance

To maintain correct and proper functioning and to prevent interruption of service, the following maintenance scheme should be adhered to.

The maintenance interval should be adapted to how frequently the machine is used.

Daily

- Check the door and door lock:
  - Let the door remain open and try starting the machine. The machine should not start.
  - Close the door, start the machine and try opening the door. It should not be possible to open the door until the drum has stopped turning.
  - Check that the door does not leak.
  - Clean the door seal, removing any detergent and fluff.
- Check that the drain valve does not leak during the wash cycle.
- Clean out any detergent remaining in the detergent compartment. Rapid advance through a program and let the water rinse the compartment:

Every third month

May only be carried out by authorized personnel.

- Check that the door does not leak.
- Check the drain valve and remove any fluff.
- Inspect the interior of the machine (during an actual wash cycle to ensure that no leaks are noticed) by:
  - Turning of the main power switch of the machine.
  - Remove the top cover and the protective front and rear plates.

- Verify that all internal hoses do not leak.
- Inspect the drive belt. Adjust the tension or replace if necessary.
- Check that water does not leak onto the floor.
- If the heating time is unusually long, check the heating elements. If the water is very hard, check whether there are lime deposits on the heating elements. Decalcify the elements if necessary. Adapt the amount of deliming agent to the manufacturer’s guidelines.
- Never switch on the heating elements when there is no water in the machine. This will cause the slow-blow fuse to trigger.
- Inspect the shock absorbers and coil springs. (Only H-model).

Troubleshooting

General information on troubleshooting

The troubleshooting section is used to trace errors in the machine to a defective component or unit.

There is a memory in the program unit that will save the selected program for approx. 3-5 minutes in the case of power cuts.

The machine will restart automatically if the power is turned on again within this time.

Safety regulations

Troubleshooting may only be carried out by authorised personnel.

Take care during all work on the machine while the power is on.

DANGER

Take care when measuring the motor control system since all components have a potential difference of approximately 300V in relation to protective earth and neutral.
The components will contain dangerous voltages when the green LED on the motor control board is on.
The motor control system will remain live for 30-60 seconds after cutting the power to the machine and the motor has stopped running.

Measurements

For information on measuring points, components and voltages, please refer to the relevant wiring diagram for the machine in question.

Errors with error code

(1) An error in the program or in the machine is indicated on the display by an error message comprising an error code and a descriptive text.

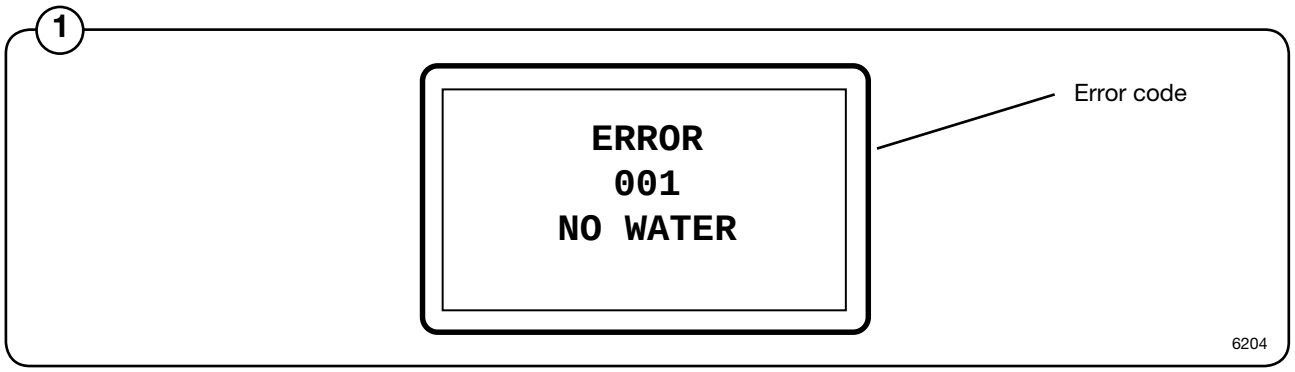

Error code

The following is a brief description of all error codes. The following pages describe error codes, possible causes and corrective measures for each code.

Error code (from CPU)	**Text message**
001	No water
002	Door open
003	Door lock fail
004	NTC low temp
005	NTC high temp
006	Water in machine
007	Overfilled
008	No heating
009*	Klixon
010	Drum not drained
011	Unb. on at prog. start

* In coin operated machine: Drum overfilled

Error code (from CPU)	**Text message**
012	Program failure
013	No motor comm.
014	Level adjust.
015	Emergency stop
016	Timeout heating
017	Door lock
018	Start not allowed
019	Master comm.
020	I/O MCU Interlock
021	I/O Communication
022	Oil
023	No I/O addressed
024	Checksum from DLCU
027	Level offset
028	CPU/DLCU low level
029	Dryer comm. error

Error code (from MCU)	**Text message**
031	Heat sink too hot
032	Motor too hot
033	No interlock
035	Motor short circuit
036	Interlock hardware
037	Low DC voltage
038	High DC voltage
042	No paramet. set in mcu
043	Unb. switch RDC/MCU on
044	Speed too high
045	Motor not follow

Error code (from DLCU)	**Text message**
051	Checksum from CPU
052	Charge circuit
053	CPU/DLCU high levels
054	Tacho, no set signal
056	Set speed door open
058	Set signal no tacho
060	Actuator circuit
062	Water, door unlocked

Only for WD4130, WD4240

Error code (from Dryer program unit)	**Text message**
073	Short temp input sensor
074	short temp outp. sensor
075	Fan motor too hot
076	Drum motor too hot
077	External error
078	Machine overheated
079	Filter lid open
080	Incorrect programming
081	Drying error RMC program
082	Drying error Autostop PR.
083	Drying error Time program
084	No gas flame detec.
085	No vacuum detected
086	Short in vacuum sens.
087	Open circuit input sensor
088	Open circuit output sens.

Activating service mode

Service mode is activated by using one of the following alternative:

Alt. 1 Service switch on the CPU board under the top cover on the front of the machine.

Alt. 2 Service switch on the I/O board at the rear of the machine to the right of the electrical connection.

Alt. 3 Service switch on the CPU card will be activated via a link arm which can be accessed from the front below the top front panel. (On machines with coin counting only.)

(2) Press the service button about 2 sec.

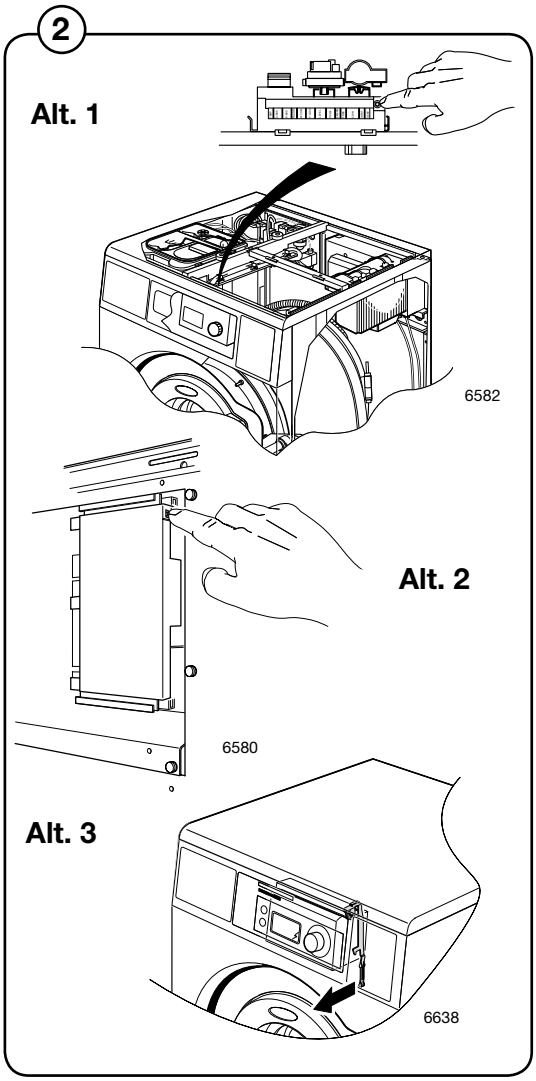

Only for WB4130H, WB4180H

Service mode is activated by using one of the following alternative:

Alt. 1 Service switch on the I/O board at the rear of the machine to the right of the electrical connection.

Alt. 2 Service switch on CPU card under left hand side of the top cover.

(2) Press the service button about 2 sec.

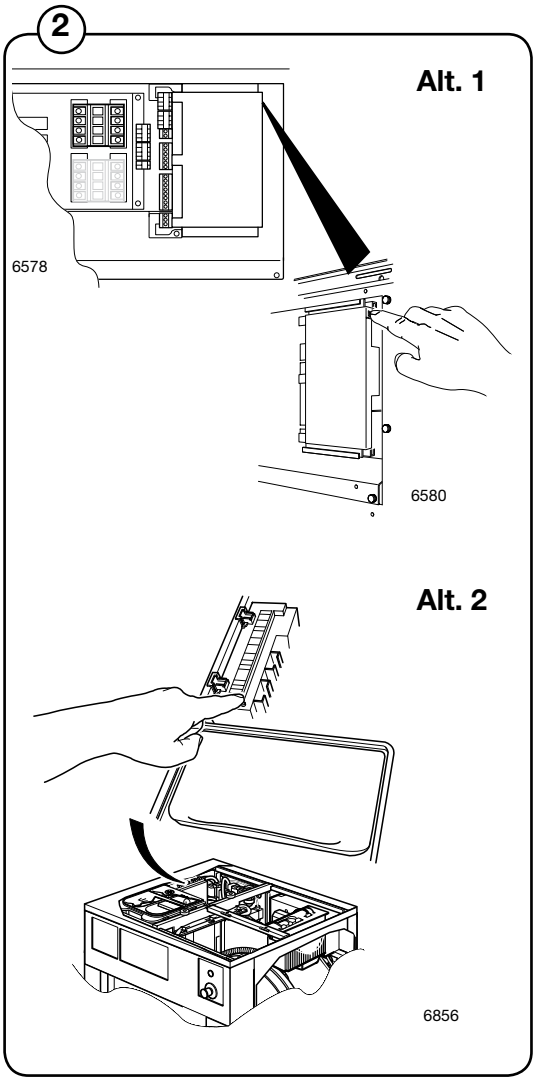

Only for WD4130, WD4240

Service mode is activated by using one of the following alternative:

Alt. 1 Service switch on the CPU board under the top cover on the front of the machine.

Alt. 2 Service switch on the CPU card will be activated via a link arm which can be accessed from the front below the top front panel.

(2) Press the service button about 2 sec.

(2)

Alt. 1

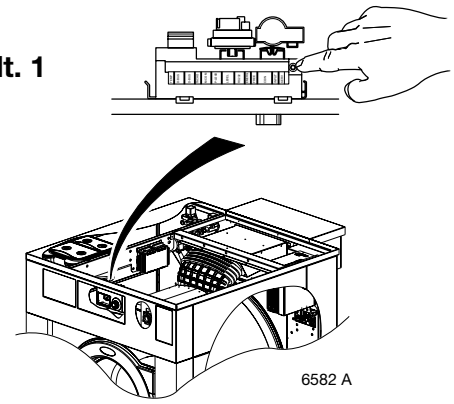

6582 A

Alt. 2

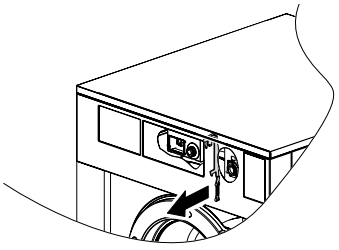

6638

(3) The machine software will now switch to its service mode. The display lists the submenus available in this mode.

This service manual describes the functions and programming instructions for the following submenus:

- SERVICE
- CONFIG 1
- ACTIVATE WASH PROGR.
- I/O ADDRESS

For submenus not presented in this document, please refer to the programming manual.

(4) To save changes to the machine's flash memory, they must be confirmed in a menu that is displayed automatically whenever a change has been made and you are exiting the menu.

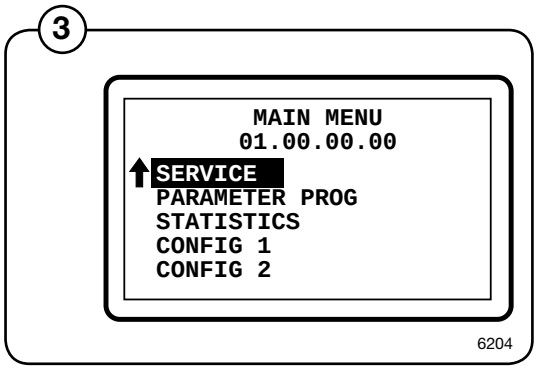

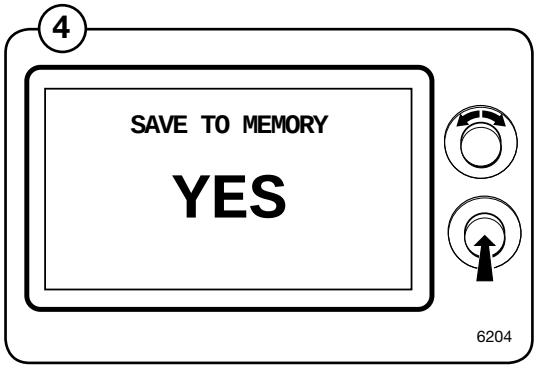

Description of error codes and causes

Error codes from CPU

Error code 01, NO WATER

This error code is generated by the CPU board.

When filling with water, the level specified by the wash program must be attained within a certain time. This time is normally set to 10 minutes but can vary depending on the type of machine and the software. If the filling time eceeds the maximum allowed filling time, error code 01 will be displayed.

Long filling times can be caused by a blocked filler valve, defective filler valve, a break in the cable between the filler valve control board, defective valve control board, leaking level system, etc.

Error code 02, DOOR OPEN

This error code is generated by the CPU board. The error code can only arise during an on-going wash program.

This error code will be displayed if the input for closed door signals that the door has been opened during an on-going wash program.

This can be caused by a bad or defective door lock, loose cable to door lock, problem with door lock edge connection.

Error code 03, DOOR LOCK FAIL

This error code is generated by the CPU board. The error code can arise at program start. If the door lock doesn't lock within a certain time after program start, this error code will be shown.

This error code will also be displayed if the door switch for locked door signals that the door has been unlocked during an on-going wash program.

This can be caused by a bad or defective door lock, loose cable to door lock, problem with door lock edge connection.

Error code 04, NTC LOW TEMP

This error code is generated by the CPU board. This error code is displayed if the temperature around the NTC sensor is below approx. -9°C.

A low temperature means the resistance in the sensor is too high, above approx. 23.7 kohm. This can be because the machine has been standing outdoors, an open circuit in the sensor, a break in the cable to the sensor, etc.

The resistance should be as shown in the table below:

Approximate values of a error free temperature sensor

T (°C)	R (ohm)
19	6100
20	5850
21	5600
22	5350
23	5100

Error code 05, NTC HIGH TEMP

This error code is generated by the CPU board. This error code is displayed if the temperature around the NTC sensor exceeds +98 degrees C.

A high temperature means the resistance in the sensor is too low, lower than approx. 350 ohm. This can be caused by a short circuit in the sensor, break in the cable to the sensor, etc.

Error code 06, WATER IN MACHINE

This error code is generated by the CPU board. This error code may appear only in the case of rapid advance to the end of the program. The error code will appear if the level system has not indicated “empty drum” within a certain time (approx. 3 min). This time may vary depending on the size of the machine.

Action:

- Check drain for dirt.
- Blow through the level hose and check that it is not blocked and does not contain any water.
- Check in the service program that the level control is working correctly.
- Check for detergent overdosing.

Error code 07, OVERFILLED

This error code is generated by the CPU board. The error code arises if the drum has been filled with water above a predetermined level during an on-going wash program. It can be caused by a blocked level hose, drops of water in the level tube, defective filler valve, defective electronic filler control, etc.

Action:

- Blow through the level hose and check that it is not blocked and does not contain any water.
- Check in the service program that the level control is working correctly.
- Check using the service program that all the water valves are working correctly.

Error code 08, NO HEATING

This error code is generated by the CPU board. The error code means that the temperature is rising too slowly when heating is active. The limit for this error code is normally set to a water temperature increase of approx. 3°C per 10 minutes but can vary depending on the type of machine and the software.

The error code can be caused by a defective heater element, a break in the power supply to the heater element, defective heater contactor, etc.

On machines built for washing mops, it can be caused by too low a level in the program stage. The lowest level for a mop program in the main wash with heating is 90 scale units.

Error code 09, KLIXON

This error code is generated by the CPU board. The error code means that the temperature in the motor has been so high that the klixon breaker in the motor has been triggered. It can be caused by overloading the motor due to an overloaded drum, low rpm for long periods, defective klixon breaker in motor, short in cable between motor and CPU board, etc.

Error code 09, DRUM OVERFILLED
(only in coin operated machines)

This error code is generated by the CPU board. The error code is caused by the mechanical level control in the machine, by safety reason a doubled level system. The error code arises if the drum has been filled with water above a level that normaly should have generated error code 07.

It can be caused by a blocked level hose, drops of water in the level tube, defective filler valve, defective electronic filler control, etc.

Action: see error code 07.

Error code 10, DRUM NOT DRAINED

This error code is generated by the programming CPU card. The error code arises if the water in the drum is not below a predetermined level when a drain period has been completed in the wash program. It can be caused by a blocked drain, blocked level hose, a water drop in the level hose, defective level control, restricted drain lines to the machine, too many machines emptying simultaneously into drain pipes that are too narrow, etc.

Action:

- First check the drain installation and that the waste water can flow freely out from the machine without any restrictions.
- Check the drain valve in the machine with regard to dirt.
- Blow through the level hose and check that it is not blocked and does not contain any water.
- Check in the service program that the level control is working correctly.

Error code 11, UNB. ON AT PROG. START

This error code is generated by the CPU board. The error code means that the mechanical imbalance breaker, if existing, is already active when the wash program starts. It can be caused by a defective imbalance breaker, mechanical problem making the imbalance breaker always active, short in the edge connection or cables, etc.

Error code 12, PROGRAMME FAILURE

This error code is generated by the CPU board. This error code means that one of the CPU board memories can be defective.

Action:

- Try reloading the software into the machine memory. If this does not help, the CPU board will have to be replaced.

Error code 13, NO MOTOR COMM.

This error code is generated by the CPU board. The error code arises if the CPU board cannot communicate with motor control via the communication cable.

Actions:

- Check that there is power reaching the motor control.
  Check the fuses in the Protection Cable. If one of the components in the Protection Cable is damaged, the cable must be replaced.
- Then check that the indicator LED on the motor control is on. The LED can be seen by looking down by the motor control edge connections.
- Check also that the communication cable between the CPU board and the motor control is intact and not damaged. Measure also with a reference instrument to see whether there is contact between all the leads in the communication cable.

Error code 14, LEVEL ADJUST

This error code is generated by the CPU board. The error code arises if the circuit board’s internal level system has not been calibrated by the manufacturer.

Error code 15, EMERGENCY STOP

This error code is generated by the CPU board. The error code arises if the emergency stop switch has been activated on the machine.

The cause can be inadvertent activation of the emergency stop, defective emergency stop switch, incorrect or shorted cable, etc.

Error code 16, TIMEOUT HEATING

This error code is generated by the CPU board. The error code is based on degrees/minutes. A check is made during water filling. If there is a drain leakage there will be repeated fillings and therefore no error code from gradient check. This timeout is an overall timeout that is started when heating is started. If heating time is longer than set in HEATING TIMEOUT, SEC (Config 2) this error code will be activated.

Error code 17, DOOR LOCK

This error code is generated by the CPU board. The error code arises if the door lock is locked at the start of the wash program, i.e. that the door is locked although the CPU board has not requested locking.

Error code 18, START NOT ALLOWED

The machine’s program unit has been disabled by a superior monitoring system.

Actions

- Contact the supplier of the monitoring system for possible causes of the monitoring system disabling operation of the machine.

Error code 19, MASTER COMM.

Communication with superior system has been broken. The cause can be an error in the network connections, damaged cable, defective monitoring system, etc.

Action:

- Contact the supplier of the monitoring system for possible causes of the monitoring system not communicating.

Error code 20, I/O MCU INTERLOCK

This error code is generated by the CPU board. The program controller has read from the motor control or I/O board that the interlock is not active. The reason for interlock failure can be a problem with the hatch lock, damaged motor supply cables or the I/O board with interlock voltage etc. The most probable error source is the I/O board.

The display will also show which I/O board is missing interlock or if it is the motor control that has no interlock.

Error code 21, I/O COMMUNICATION

This error code is generated by the CPU board. The program unit cannot communicate any longer with one or more I/O boards in the machine that it has communicated with before. The cause can be a problem with the machine's internal communication cables or that one or more I/O boards have lost their address.

Action:

- (Requires password) Check the machine's internal communication cables. Readdress all the I/O boards in the system using the service program if the cables are not at error.

NOTE!
If only one I/O-card in mascine, press the service button on the I/O-card about 10 seconds or untill the LED goes out. Now I/O.card 1 will be addressed as No. 1.

Error code 22, OIL

This error code is generated by the CPU board. The error code indicates low oil level in the oil reservoir for the oil lubrication. It can be caused by a lack of oil, defective sensor, shorted cable, etc.

Action:

- Fill with oil first. If this does not help, check sensor and cables.

Error code 23, NO I/O ADDRESSED

The error code means that there is no I/O board addressed in the system at all.

Action:

- (Requires password) Readdress the existing I/O board from the service menu.

Error code 24, CHECKSUM FROM DLCU

This error code is generated by the CPU board. The program unit has detected an error in the internal communication in the DLCU-processor.

Action:

- Replace the CPU board.

Error code 27, LEVEL OFFSET

This error code is generated by the CPU board. The error code arises if the level system indicates a level at the start of the wash program (when the drum should be empty) that exceeds what the program unit can compensate for automatically. This can be caused by blocked drain, blocked level hose, a drop of water in the level hose, leaking level system, defective level control, etc.

Action:

- Check drain for dirt.
- Blow through the level hose and check that it is not blocked and does not contain any water.
- Check in the service program that the level control is working correctly.

Error code 28, CPU/DLCU LOW LEVELS

The DLCU contains a mechanical level monitor which ensures that there is no water in the machine when the lock opens. To ensure that the level monitor functions correctly, the mechanical level monitor is compared with a nominal value generated by the CPU, which is compared with the electronic level check.

When the water level exceeds the nominal value, a check is made to ensure that the mechanical level monitor is switched on, and if not, an error code is generated.

When the mechanical EWD monitor is switched on during filling, the water level in the drum must have exceeded the nominal value measured by the electronic level control.

When the mechanical level monitor is switched of during draining, the water level in the drum must be below the nominal value measured by the electronic level control.

Reason:

- The level controller can be damaged:
- Cross talk in the level controller electrical system.
- Leakage in the level controller's air hoses.
- Incorrect nominal value, possibly caused by a error in the electronic level controller.

Action:

- Check the level controller function. (Switch-on level = 40 mm, switch-off level = 15 mm Wg)
- Check the cables and their connections. The voltage across the level controller should be 0 V when the water level is < 15 mm Wg and 5 V when water level is > 40 mm Wg.
- Check that the level hoses are not blocked. Blow clean all the hoses in the level system.

Error code 29, DRYER COMM. ERROR

This error code is generated by the CPU board. The Compass CPU board has detected an error in the communication with the internal Selecta II CPU board.

Action:

- Check that the Selecta II CPU board display is lit (the board has power supply).
- Check that wires are not damaged and connected properly.
- Check the internal baudrate set up in Selecta II CPU board in parameter 4:08 = 1 (which means 2400 baud).
- Check that the address in parameter 4:07 = 1 in the Selecta II CPU.
- Update software in both Selecta II CPU and Compass CPU.
- If nothing of above works, please call ELS service.

Error codes from MCU

Error code 31, HEAT SINK TOO HOT

This error code is generated by the motor control. There is a temperature sensor (NTC) mounted on the motor control cooling flange next to the power transistors in the output stage. If the temperature of the cooling flange gets too high (> 90°C) the error code will be set to protect the transistors.

The cause of high cooling flange temperature can be e.g. a stiff drum in combination with intensive use and high ambient temperature. There may also be an error in the motor (sticking bearings or short circuit in windings, which impairs the efficiency of the motor).

Actions:

- Make sure the drum turns easily.
- Check the value on the error code counter for error code 31.
- Check the last 8 motor control error codes.
- Start a 90°C normal program with load on continuous operation and measure the temperature of the motor and motor control.
- Replace the defective part.

Error code 32, MOTOR TOO HOT

This error code is generated by the motor control. Each time the motor is started from stationary, the motor control will first measure the resistance between two phases in the motor. The motor control processor governs the output transistors so that a DC current flows between two phases in the motor winding. The actuation of the transistors is a measure of the voltage applied to the winding and the resistance can be calculated using the current and voltage values. The resistance can then be converted to a temperature since the winding resistance at 20°C and the temperature coefficient are known. If the average value of the four latest temperature readings is higher than the maximum motor temperature (e.g. 150°C), the ”Motor too hot” error code will be activated.

The cause of high motor temperature can be a stiff drum, possibly in combination with intensive use and high ambient temperature. There may also be an error in the motor (sticking bearings or short circuit in windings, which impairs the efficiency of the motor). There could also be a contact error in the connectors between the motor control and the motor or an error in the motor cable. An error in motor control temperature measurement circuits can also occur.

Actions:

- Make sure the drum turns easily.
- Check the value on the error code counter for error code 32.
- Check the last 8 motor control error codes.
- Measure the three phases to the phase resistors on the motor control motor connector (disconnect motor control and take the reading in the cable connector) to make sure they are the same.
- Start a 90°C normal program with load on continuous operation and measure the temperature of the motor and motor control.
- Replace the defective part.

Error code 33, NO INTERLOCK

This error code is generated by the motor control. The motor control must be powered with 230V/50 or 60 Hz on the interlock input in order to drive the motor. This signal is a confirmation that the door is closed and locked. Motor control receives its commands to rotate the drum from the timer via a serial communication link between the motor control and timer. Since the timer also has access to the interlock signal, the timer must never send a run command to the motor control if the interlock signal is missing. If this does happen, the ”No interlock” error code will be activated.

The cause of this error code being activated can be e.g. a break in the cable leading the interlock signal to the motor control. There may also be an error in the connector in the door lock, which connects 230V/50Hz to the interlock signal. An error in the interlock circuits of the motor control can also set this error code.

Actions:

- Use a measuring instrument to check that the interlock signal comes on X302:1-2 when the door lock is activated. Read also bit 1 in the second byte under ”Motor Status” in the service program (the bits are numbered from 0 to 7 where bit 0 is on the far right). If bit 1 in the second byte is 1 then the lock is open, while a 0 indicates that the lock is closed.
- Replace the defective part when it has been located.

Error code 35, MOTOR SHORT CIRCUIT

This error code is generated by the motor control. The motor control reads the power consumption of the motor continuously. If the current for some reason gets too high (= exceeds a certain limit), the motor control will cut the current to the motor. After the motor has stopped (= tachometer indicates stationary motor), the motor control will attempt to restart it. If the motor control then detects high motor current again, the ”Short circuit motor” error code will be activated. If on restarting after a first short circuit, the motor control rotates normally, an error code will not be activated.

This error code can be activated for a number of reasons:

- Short circuit in motor
- Short circuit internally in motor winding (impaired efficiency, higher current consumption)
- Short circuit in motor cables
- Short circuit in connectors
- Drops of water causing short circuits in the motor connector
- Short circuit in the motor control output transistors
- Bad contact in tacho signal
- Bad contact in interlock signal

Actions:

If the error is a stable one, it is generally not difficult to locate the defective unit through resistance measurement and testing with the service program. Further information can be obtained by studying the contents of ”MCU FAULT LOGGER”. Study the following:

- SHORT CIRCUIT 2 (specifies how many times error code 35 has been active)
- SHORT CIRCUIT 1 (specifies how many times the current limit has been exceeded. The difference between short circuit 1 and short circuit 2 indicates how many times there has been a short circuit 1 that has not been confirmed when restarting the motor).
- LAST FAULT CODE N/8 (shows the 8 latest error codes)
- TACHO CUT-OUT LOW RPM (can give a clue in case of intermittent errors)
- TACHO CUT-OUT HIGH RPM (can give a clue in case of intermittent errors)

Error code 36, INTERLOCK HARDWARE

This error code is generated by the motor control. The motor control must be powered with 230V/50 or 60 Hz on the interlock input in order to drive the motor. The interlock circuits in the motor control have been split into two channels so that a component error in motor control cannot give a false confirmation that the door is locked. These two channels are checked against each other. If this check gives an incorrect result, the ”INTERLOCK HARDWARE” error code will be activated.

The reason for this error code being activated can be attributed to an error in the interlock circuits in motor control.

Action:

- Replace motor control.

Error code 37, LOW DC VOLTAGE

This error code is generated by the motor control unit. The motor control unit constantly measures the voltage over the mains input. If the voltage is too low (= falls below a certain limit), the motor control unit will shut off the current to the motor. Once the motor has stopped (= the tacho sensor indicates that the motor is stationary), the motor control unit checks to see whether the input voltage is still low. If it is, an error code is activated: ”LOW DC VOLTAGE”.

The reason for this error code being activated can be low mains voltage or that the machine’s on/off switch has been operated in an unsuitable manner. Further information can be obtained by studying the contents of ”MCU FAULT LOGGER”:

- UNDERVOLTAGE 2 (specifies how many times error code 37 has been active)
- UNDERVOLTAGE 1 (specifies how many times the voltage has dropped below the limit. The difference between undervoltage 1 and undervoltage 2 indicates how many times there has been an undervoltage 1 without it being confirmed when the motor has stopped).
- LAST FAULT CODE N/8 (shows the 8 latest error codes)

Undervoltages can be registered even during normal operation. Consequently, a small number of registrations need not mean that there is an error in the motor control.

Measure:

- Check that the supply voltage is stable and never drops below nominal voltage - 10%.
- Check that the fuses and cables are not errory.
- Check the supply voltage in the network cabling and at the motor control system in the machine.

Error code 38, HIGH DC VOLTAGE

This error code is generated by the motor control unit. The motor control unit constantly measures the voltage over the mains input. If the voltage is too high (= exceeds a certain limit), the motor control unit will shut off the current to the motor. Once the motor has stopped (= the tacho sensor indicates that the motor is stationary), the motor control unit checks to see whether the input voltage is still high. If it is, an error code is activated: ”HIGH DC VOLTAGE”.

The reason for this error code being activated can be high mains voltage (e.g. power surge). Further information can be obtained by studying the contents of ”FC FAULT LOGGER”:

- OVERVOLTAGE 2 (specifies how many times error code 38 has been active)
- OVERVOLTAGE 1 (specifies how many times the voltage limit has been exceeded. The difference between overvoltage 1 and overvoltage 2 gives the number of times overvoltage 1 has occurred without it being confirmed when the motor has stopped).
- LAST FAULT CODE N/8 (shows the 8 latest error codes)

Overvoltage registrations can also occur if there is a bad contact in the tacho signal. Check also the following registers:

- TACHO CUT-OUT LOW RPM (number of short tacho interruptions during wash rpm)
- TACHO CUT-OUT HIGH RPM (number of short tacho interruptions during extraction rpm)

Action:

- Check the tacho cables if there are many registrations in the TACHO CUT-OUT registers.

Error code 42, NO PARAMET. SET IN MCU

This error code is generated by the motor control unit.

The motor controller (MCU) (inverter) contains several different parameter sets for different motors. During power up the timer checks that the correct parameter set digit is written into the MCU. If not, the timer will write down the parameter set digit defined in fixed config.
If the MCU discovers that no parameter set value is written down into the MCU, the error coce will be displayed

Switch off the machine for at least 30 seconds to ensure the motor controller (MCU) has been completely reset. Then try to start the machine again.

If the error returns, make sure that the timer system has the latest software version. If not, please update.

If the error still remains, replace the motor controller (MCU).

Error code 45, MOTOR NOT FOLLOWING

This error code is generated by the motor control. The motor control must always receive information on the rotation of the motor from the tacho sensor in order to rotate. If the tacho sensor is not working, the motor can rotate for max. 10 seconds during the starting process. After this period, the ”MOTOR NOT FOLLOWING” error code will be activated.

Reasons for this code being activated can be:

- Break in the cables between the tacho sensor and the motor control
- Break in connectors in tacho cables
- Break in one of the phases to the motor (cables or connectors). This error can be suspected if the motor does not rotate for 10 seconds (the motor will not start with only two phases).
- Error in tacho generator
- Error in tacho circuits in the motor control

Further information can be obtained by studying the contents of ”FC ERROR LOGGER”. Study the following:

- MOTOR NOT FOLLOWING (specifies how many times error code 45 has occurred)
- LAST ERROR CODE N/8 (shows the 8 latest error codes)
- TACHO CUT-OUT LOW RPM (can give a clue in case of intermittent errors)
- TACHO CUT-OUT HIGH RPM (can give a clue in case of intermittent errors)

Action:

- Replace the defective part when troubleshooting is complete.

Error codes from DLCU

Error code 51, CHECKSUM FROM CPU

DLCU has detected an error in the internal communication between DLCU and CPU. The DLCU processor will reset itself when the error has disappeared.

CPU reads the error message when the program starts and finishes and generates an error code, the error message is ignored between these two occasions.

Reason:

Strong interference from surrounding equipment etc. can cause error codes.

Action:

Re-set the error codes. If the error codes can not be re-generated or if they return, rectify the adjacent equipment that causes the interference. If this does not help, try changing the CPU board, since the interference sensitivity of different CPU boards can vary to some extent.

Error code 52, CHARGE CIRCUIT

DLCU contains an arming circuit that is charged when the door lock coil is to be activated. For safety reasons, this arming circuit must be discharged when the door lock coil is not to be activated.

If the arming circuit for operating the door lock is charged when it is not supposed to be, an error message will be sent to the CPU processor. If the error ceases, the message will not be sent to the CPU.

CPU reads the error message when the program starts and finishes and generates an error code, the error message is ignored between these two occasions.

Cause:

- The error can have been caused by overloads and/or defective components in the DLCU, or caused by defective components in the CPU.

Measure:

- If the error cannot be corrected, replace the CPU unit.

Error code 53, CPU/DLCU HIGHLEVELS

The DLCU contains a mechanical level monitor which ensures that there is no water in the machine when the door lock opens. To ensure that the level monitor functions correctly, the mechanical level monitor is compared with a nominal value generated by the CPU, which is compared with the electronic level check.

When a program starts or terminates, a check is made to ensure that the mechanical level monitor is switched off, and if this is not the case, an error code is generated.

Reason:

- The level controller can be damaged:
- Open circuit in the cables for the level controller.
- Blocked air hoses in the level controller system.

Action:

- Check the level controller function. (Switch-on level = 40 mm, switch-off level = 15 mm Wg)
- Check the cables and their connections. The voltage across the level controller should be 0 V when the water level is < 15 mm Wg and 5 V when water level is > 40 mm Wg.
- Check that the level hoses are not blocked. Blow clean all the hoses in the level system.

Error code 54, TACHO, NO SET SIGNAL

DLCU counts the tacho pulses from the motor in order to guarantee that the drum is stationary when the door is opened. To ensure that the signal from the tacho generator is working correctly, DLCU compares the tacho signal to a digital bit value from the CPU processor, which is due to the CPU having activated the motor. The tacho signal should always correspond to the digital bit value and if the tacho signal is present without the digital bit value, an error message will be generated to CPU.

The error message is filtered in such a way that the drum must rotate and stop twice without the ”should rotate” signal being present before an error message is sent to CPU.

The DLCU processor will reset itself when the error has disappeared.

CPU reads the error message when the program finishes and generates an error code, the error message is ignored between these two occasions.

Reason:

The error can be caused by cross talk in circuits in the CPU, or caused by damaged components in the CPU.

Action:

If the error returns after a reset, change the CPU.

Error code 56, SET SPEED DOOR OPEN

DLCU counts the tacho pulses from the motor in order to guarantee that the drum is stationary when the door is opened. To ensure that the signal from the tacho generator is working correctly, DLCU compares the tacho signal to a digital bit value from the CPU processor, which is due to the CPU having activated the motor.

If the digital bit value is on when the door lock is unlocked, an error message will be sent to CPU.

The DLCU processor will reset itself when the error has disappeared.

CPU reads the error message when the program finishes and generates an error code, the error message is ignored between these two occasions.

Reason:

The error can be caused by cross talk in circuits in the CPU, or caused by damaged components in the CPU.

Action:

If the error returns after a reset, change the CPU.

Error code 58, SET SIGNAL NO TACHO

DLCU counts the tacho pulses from the motor in order to guarantee that the drum is stationary when the door is opened. To ensure that the signal from the tacho generator is working correctly, DLCU compares the tacho signal to a digital bit value from the CPU processor, which is due to the CPU having activated the motor. The tacho signal should always correspond to the digital bit value and if the tacho signal is not present when the digital bit value is present, an error message will be generated to CPU.

The error message is filtered in such a way that the digital bit value should have been on for 2 seconds; if this is the case, a check is made that the pulses from the tacho sensor are present when the digital bit value ceases.

The DLCU processor will reset itself when the error has disappeared.

CPU reads the error message when the program finishes and generates an error code, the error message is ignored between these two occasions.

Reason:

- The error can be caused by breaks in the circuits for the tacho sensor, or caused by a error in the magnet in the tacho sensor.
- Collateral damage due to a error in the motor system.

Action:

- If there is no error in the tacho sensor or the motor system, and the error returns after a reset, change the CPU.

Error code 60, ACTUATOR CIRCUIT

The DLCU processor controls the door lock actuator coil. The DLCU processor checks continuously that the coil is engaged. DLCU can detect a break in the circuit (>50 kohm) (DLCU cannot detect a short in the circuit). If there is a break in the actuator circuit, CPU will be notified; the error message will disappear if the error ceases.

CPU reads the error message when the program starts and finishes and generates an error code, the error message is ignored between these two occasions.

Reason:

- The error can be caused by a break in the cables between the hatch lock and the CPU, or caused by a error in the hatch lock solenoid.
- Error or break in the CPU circuits.

Action:

- If the error returns after a reset, and is not caused by a error in the hatch lock or the cables for the hatch lock, change the CPU.

Only for WD4130, WD4240

Error codes from DRYER PROGRAM UNIT

***F**or more information see Service Manual for Selecta II*

Error code 73, SHORT TEMP INPUT SENSOR

The thermistor element measuring the air inlet temperature to the drum, or the wiring to the sensor has shorted.
(E 03 in the Service Manual for Selecta II).

Error code 74, SHORT TEMP OUTP. SENSOR

The thermistor element measuring the air outlet temperature from the drum, or the wiring to the sensor has shorted.
(E 04 in the Service Manual for Selecta II).

Error code 75, FAN MOTOR TOO HOT

The thermal protection switch in the motor, or its harness, is open.
(E 05 in the Service Manual for Selecta II).

Error code 76, DRUM MOTOR TOO HOT

The thermal protection switch in the motor, or its harness, is open.
(E 06 in the Service Manual for Selecta II).

Error code 77, EXTERNAL ERROR

External equipment connected to the machine has caused error on port P13.
(Not relevant for this machine).

Error code 78, MACHINE OVERHEATED

One of the proctection thermostats has opened due to overheating.
(E 08 in the Service Manual for Selecta II).

Error code 79, FILTER LID OPEN

The machine is started with the lint drawer open or the machine has been operating for more than 40 hours without the lint drawer being emptied.
Close the lint drawer if it is open.
Clean the filter. (Not relevant for this machine).

Error code 80, INCORRECT PROGRAMMING

Programming error/incorrect or missing parameter.
(E 10 in the Service Manual for Selecta II).

Error code 81, DRYING ERROR RMC PROGRAM

Maximum allowable RMC time exceeded (non-coin operated models only).
(E 11 in the Service Manual for Selecta II).

Error code 82, DRYING ERROR AUTOSTOP PR.

Maximum allowable Autostop time exceeded (non-coin operated models only).
(E 12 in the Service Manual for Selecta II).

Error code 83, DRYING ERROR TIME PROGRAM

Requested drying time is longer than maximum allowed (machine connected to a payment system). (E 13 in the Service Manual for Selecta II).

Error code 84, NO GAS FLAME DETEC.

A flame was not detected on gas heated machines.
(E 14 in the Service Manual for Selecta II).

Error code 85, NO VACUUM DETECTED

The vacuum switch/pressure switch does not shut within 12 seconds after the machine is started. (E 15 in the Service Manual for Selecta II).

Error code 86, SHORT IN VACUUM SENS.

The vacuum switch/pressure switch was already closed when an attempt to start the machine was made. (E 16 in the Service Manual for Selecta II).

Error code 87, OPEN CIRCUIT INPUT SENSOR

The inlet thermistor or wiring to the thermistor is open.
(E 17 in the Service Manual for Selecta II).

Error code 88, OPEN CIRCUIT OUTPUT SENS.

The outlet thermistor or wiring to the thermistor is open.
(E 18 in the Service Manual for Selecta II).

Thinking of you

Electrolux

Electrolux Laundry Systems Sweden AB
341 80 Ljungby, Sweden
www.electrolux.com/laundrysystems

Share more of our thinking at www.electrolux.com