Use & Care Manual

Over-the-Range
Microwave Oven

CGLMV169, GLMV169
CPLMV169, PLMV169

Welcome & Congratulation 2

Important Safety Instructions .. 2-6

Part Names 7

Before Operating 8

Manual Operation 8

Operating Instructions 9-17

Cleaning and Care 18-19

Specifications 20

Service Call Check 20

Warranty 21

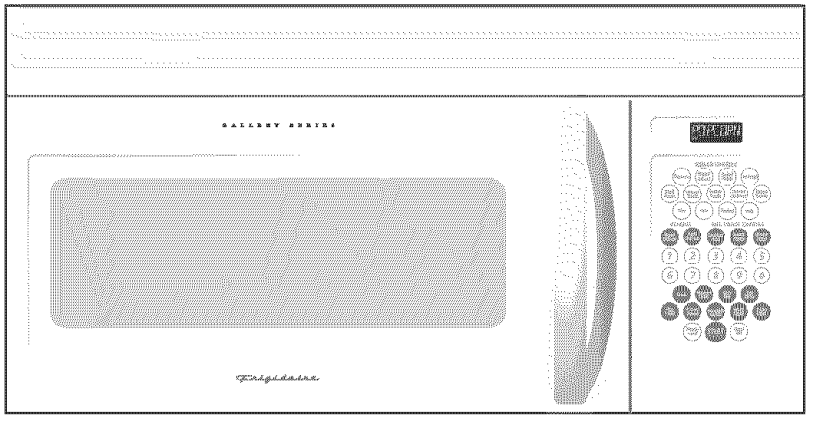

Visit the Frigidaire Web Site at:

http://www.frigidaire.com

READ AND SAVE THESE INSTRUCTIONS

p/n 316137231
TINSEB380MRR0

Welcome & Congratulations

Questions?

1-800-944-9044
(United States)

1-866-729-5199
(Canada)

Please attach sales receipt here for future reference.

Congratulations on your purchase of a new microwave oven! At **Electrolux Home Products,** we are very proud of our product and are completely committed to providing you with the best service possible. Your satisfaction is our number one priority.

We know you'll enjoy your new microwave oven and **Thank You** for choosing our product. We hope you consider us for future purchases.

PLEASE CAREFULLY READ AND SAVE THESE INSTRUCTIONS

This Use & Care Manual provides specific operating instructions for your model. Use your microwave oven only as instructed in this manual. These instructions are not meant to cover every possible condition and situation that may occur. Common sense and caution must be practiced when installing, operating and maintaining any appliance.

Please record your model and serial numbers below for future reference.

Model Number: _____

Serial Number: _____

Purchase Date: _____

NEED HELP?

Visit the Frigidaire Web Site at: http://www.frigidaire.com

Before you call for service, there are a few things you can do to help us serve you better.

Read this manual.

It contains instructions to help you use and maintain your microwave oven properly.

If you received a damaged Microwave Oven... immediately contact the dealer (or builder) that sold you the Microwave Oven.

Save time and money.

Check the section titled "Service Call Check". This section helps you solve common problems that might occur. If you do need service, you can relax knowing help is only a phone call away. A list of toll-free customer service numbers is included in the back of this manual. Or call Frigidaire Customer Services at 1-800-944-9044, 24 hours a day, 7 days a week.

Important Safety Instructions

PRECAUTIONS TO AVOID POSSIBLE EXPOSURE TO EXCESSIVE MICROWAVE ENERGY

For your safety the information in this manual must be followed to minimize the risk of fire or explosion or to prevent property damage, personal injury or loss of life.

- ***Do Not Attempt*** to operate this microwave oven with the door open since open-door operation can result in harmful exposure to microwave energy. It is important not to defeat or tamper with the safety interlocks.
- ***Do Not Place*** any object between the microwave oven front face and the door or allow soil or cleaner residue to accumulate on sealing surfaces.
- ***Do Not Operate*** the microwave oven if it is damaged. It is particularly important that the microwave oven door close properly and that there is no damage to the:
  1. door (bent)
  2. hinges and latches (broken or loosened)
  3. door seals and sealing surfaces.
- ***The Microwave Oven Should Not*** be adjusted or repaired by anyone except properly qualified service personnel.

Important Safety Instructions

WARNING This symbol will help alert you to situations that may cause serious bodily harm, death or property damage.

CAUTION This symbol will help alert you to situations that may cause bodily injury or property damage.

READ ALL INFORMATION BEFORE USING

WARNING To reduce the risk of fire, burns, electric shock, injury to persons, or exposure to excessive microwave energy when using your appliance, follow basic ***precautions, including the following sections.***

- Read all instructions before using the appliance.
- Read and follow the specific **"PRECAUTIONS TO AVOID POSSIBLE EXPOSURE TO EXCESSIVE MICROWAVE ENERGY"** on page 2.
- This appliance must be grounded. Connect only to properly grounded outlet. See **"ELECTRICAL GROUNDING INSTRUCTIONS"** on page 4.
- Install or locate this appliance only in accordance with the provided installation instructions.
- Some products such as whole eggs and sealed containers —for example, closed glass jars—are able to explode and should not be heated in this microwave oven.
- Use this appliance only for its intended use as described in this manual. Do not use corrosive chemicals or vapors in this appliance. This type of microwave oven is specifically designed to heat, cook or dry food. It is not designed for industrial or laboratory use.
- As with any appliance, close supervision is necessary when used by children.
- Do not operate this appliance if it has a damaged cord or plug, if it is not working properly or if it has been damaged or dropped.
- This appliance should be serviced only by qualified service personnel. Contact nearest Electrolux Authorized Servicer for examination, repair or adjustment.
- Do not cover or block any openings on the appliance.
- Do not store or use this appliance outdoors. Do not use this product near water—for example, near a kitchen sink, in a wet basement or near a swimming pool, or similar locations.
- Do not immerse cord or plug in water.
- Keep cord away from heated surfaces.
- Do not let cord hang over edge of table or counter.
- See door surface cleaning instructions on page 18.
- To reduce the risk of fire in the microwave oven cavity:
  - Do not overcook food. Carefully attend appliance when paper, plastic or other combustible materials are placed inside the microwave oven to facilitate cooking.
  - Remove wire twist-ties from paper or plastic bags before placing bag in microwave oven.
  - **If materials inside the microwave oven should ignite, keep microwave oven door closed, turn microwave oven off and disconnect the power cord or shut off power at the fuse or circuit breaker panel.**
  - Do not use the cavity for storage purposes. Do not leave paper products, cooking utensils or food in the cavity when not in use.
- Liquids, such as water, coffee or tea are able to be overheated beyond the boiling point without appearing to be boiling. Visible bubbling or boiling when the container is removed from the microwave oven is not always present. **THIS COULD RESULT IN VERY HOT LIQUIDS SUDDENLY BOILING OVER WHEN A SPOON OR OTHER UTENSIL IS INSERTED INTO THE LIQUID.**

  To reduce the risk of injury to persons:
  - Do not overheat the liquid.
  - Stir the liquid both before and halfway through heating it.
  - Do not use straight-sided containers with narrow necks. Use a wide-mouthed container.
  - After heating, allow the container to stand in the microwave oven at least for 20 seconds before removing the container.
  - Use extreme care when inserting a spoon or other utensil into the container.
- Clean ventilation openings and grease filters frequently. Grease should not be allowed to accumulate on ventilation openings, louver or grease filters.
- Use care when cleaning the louver and the grease filters. Corrosive cleaning agents, such as lye-based oven cleaners, may damage the louver and the grease filters.
- When flaming food under the hood, turn the fan on.
- This appliance is suitable for use above both gas and electric cooking equipment 36" wide or less.

SAVE THESE INSTRUCTIONS.

UNPACKING AND EXAMINING YOUR MICROWAVE OVEN

Open the bottom of the carton, bend the carton flaps back and tilt the microwave oven over to rest on plastic foam pad. Lift carton off microwave oven and remove all packing materials, Installation Instructions, Wall Template, Top Template, Charcoal Filter, Turntable and Turntable Support. SAVE THE CARTON AS IT MAY MAKE INSTALLATION EASIER.

- Remove the feature sticker from the outside of the door, if there is one.
- DO NOT REMOVE THE WAVEGUIDE COVER, which is located on the ceiling in the microwave oven cavity. Check to see that there are Installation Instructions, Wall Template, Top Template and Charcoal Filter, which is used when recirculating is chosen. Read enclosures and SAVE the Use and Care Manual.

Check the microwave oven for any damage, such as misaligned or bent door, damaged door seals and sealing surfaces, broken or loose door hinges and latches and dents inside the cavity or on the door. If there is any damage, do not operate the microwave oven and contact your dealer or ELECTROLUX SERVICER. See Installation Instructions for more details.

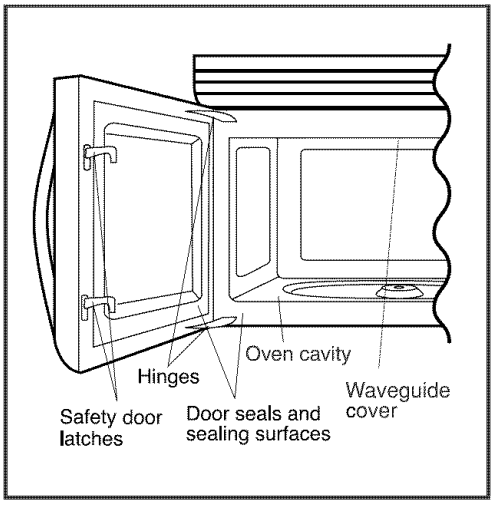

GROUNDING INSTRUCTIONS

This appliance must be grounded. This microwave oven is equipped with a cord having a grounding wire with a grounding plug. It must be plugged into a wall receptacle that is properly installed and grounded in accordance with the National Electrical Code and local codes and ordinances. In the event of an electrical short circuit, grounding reduces risk of electric shock by providing an escape wire for the electric current.

WARNING Improper use of the grounding plug can result in a risk of electric shock.

Electrical Requirements

Check Installation Instructions for proper location for the power supply.

The electrical requirements are a 120 volt 60 Hz, AC only, 15 amp. or more protected electrical supply. It is recommended that a separate circuit serving only the microwave oven be provided.

The microwave oven is equipped with a 3-prong grounding plug. It must be plugged into a wall receptacle that is properly installed and grounded. DO NOT UNDER ANY CIRCUMSTANCES CUT OR REMOVE THE GROUNDING PIN FROM THE PLUG.

NOTES:

1. If you have any questions about the grounding or electrical instructions, consult a qualified electrician or service person.
2. Neither Electrolux nor the dealer can accept any liability for damage to the microwave oven or personal injury resulting from failure to observe the correct electrical connection procedures.

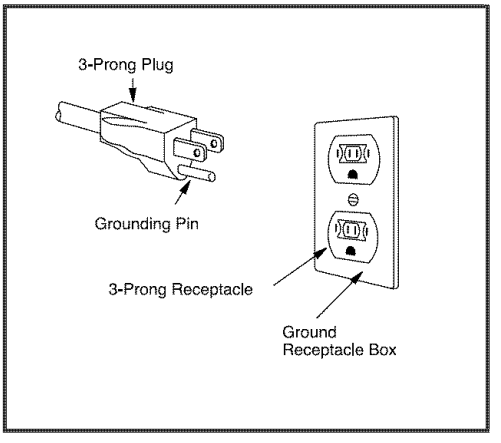

Radio or TV Interference

Should there be any interference caused by the microwave oven to your radio or TV, check that the microwave oven is on a different electrical circuit, relocate the radio or TV as far away from the microwave oven as feasible or check position and signal of receiving antenna.

ABOUT YOUR MICROWAVE OVEN

This Use and Care Manual is valuable: read it carefully and always save it for reference.

A good microwave cookbook is a valuable asset. Check it for microwave cooking principles, techniques, hints and recipes.

NEVER use the microwave oven without the turntable and support nor turn the turntable over so that a large dish could be placed in the microwave oven. The turntable will turn both clockwise and counterclockwise. See page 18 for complete instructions.

ALWAYS have food in the microwave oven when it is on to absorb the microwave energy.

When using the microwave oven at power levels below 100%, you may hear the magnetron cycling on and off. It is normal for the exterior of the microwave oven to be warm to the touch when cooking or reheating.

Condensation is a normal part of microwave cooking. Room humidity and the moisture in food will influence the amount of moisture that condenses in the microwave oven. Generally, covered foods will not cause as much condensation as uncovered ones. Ventilation openings must not be blocked.

The microwave oven is for food preparation only. It should not be used to dry clothes or newspapers.

Your microwave oven is rated 1000 watts by using the IEC Test Procedure. In using recipes or package directions, check food a minute or two before the minimum time and add time accordingly.

ABOUT MICROWAVE COOKING

- Arrange food carefully. Place thickest areas towards outside of dish.
- Watch cooking time. Cook for the shortest amount of time indicated and add more as needed. Food severely overcooked can smoke or ignite.
- Cover foods while cooking. Check recipe or cookbook for suggestions: paper towels, wax paper, microwave plastic wrap or a lid. Covers prevent spattering and help foods to cook evenly.
- Shield with small flat pieces of aluminum foil any thin areas of meat or poultry to prevent overcooking before dense, thick areas are cooked thoroughly.
- Stir foods from outside to center of dish once or twice during cooking, if possible.
- Turn foods over once during microwaving to speed cooking of such foods as chicken and hamburgers. Large items like roasts must be turned over at least once.
- Rearrange foods such as meatballs halfway through cooking both from top to bottom and from the center of the dish to the outside.
- Add standing time. Remove food from microwave oven and stir, if possible. Cover for standing time which allows the food to finish cooking without overcooking.
- Check for doneness. Look for signs indicating that cooking temperatures have been reached.

  Doneness signs include:

  - Food steams throughout, not just at edge.
  - Center bottom of dish is very hot to the touch.
  - Poultry thigh joints move easily.
  - Meat and poultry show no pinkness.
  - Fish is opaque and flakes easily with a fork.

ABOUT FOODS

- Do not pop popcorn in your microwave oven unless in a special microwave popcorn accessory or unless you use popcorn labeled for use in microwave ovens.
- Some products such as whole eggs and sealed containers—for example, closed jars—will explode and should not be heated in this microwave oven. Such use of the microwave oven could result in injury.
- Do not boil eggs in a microwave oven. Pressure will build up inside egg yolk and will cause it to burst, possibly resulting in injury.
- Operating the microwave with no food inside for more than a minute or two may cause damage to the microwave oven and could start a fire. It increases the heat around the magnetron and can shorten the life of the microwave oven.
- Foods with unbroken outer "skin" such as potatoes, hot dogs, sausages, tomatoes, apples, chicken livers and other giblets, and egg yolks should be pierced to allow steam to escape during cooking.
- Avoid heating baby food in glass jars, even with the lid off. Make sure all infant food is thoroughly cooked. Stir food to distribute the heat evenly. Be careful to prevent scalding when warming formula or breast milk. The container may feel cooler than the milk really is. Always test the milk before feeding the baby.
- Spontaneous boiling—Under certain special circumstances, liquids may start to boil during or shortly after removal from the microwave oven. To prevent burns from splashing liquid, we recommend the following: before removing the container from the microwave oven, allow the container to stand in the microwave oven for 30 to 40 seconds after the microwave oven has shut off. Do not boil liquids in narrownecked containers such as soft drink bottles, wine flasks and especially narrow necked coffee cups. Even if the container is opened, excessive steam can build up and cause it to burst or overflow.
- Do not defrost frozen beverages in narrow-necked bottles (especially carbonated beverages). Even if the container is opened, pressure can build up. This can cause the container to burst, possibly resulting in injury.
- Hot foods and steam can cause burns. Be careful when opening any containers of hot food, including popcorn bags, cooking pouches and boxes. To prevent possible injury, direct steam away from hands and face.
- Do not overcook potatoes. They could dehydrate and catch fire, causing damage to your microwave oven.
- Cook meat and poultry thoroughly—meat to at least an INTERNAL temperature of 160°F and poultry to at least an INTERNAL temperature of 180°F. Cooking to these temperatures usually protects against foodborne illness.

ABOUT UTENSILS AND COVERINGS

It is not necessary to buy all new cookware. Many pieces already in your kitchen can be used successfully in your new microwave oven. Make sure the utensil does not touch the interior walls during cooking.

Use these utensils for safe microwave cooking and reheating:

- glass ceramic (Pyroceram®), such as Corningware®.
- heat-resistant glass (Pyrex®)
- microwave-safe plastics
- paper plates
- microwave-safe pottery, stoneware and porcelain
- browning dish (Do not exceed recommended preheating time. Follow manufacturer's directions.)

These items can be used for short time reheating of foods that have little fat or sugar in them:

- wood, straw, wicker

DO NOT USE

- metal pans and bakeware
- dishes with metallic trim
- non-heat-resistant glass
- non-microwave-safe plastics (margarine tubs)
- recycled paper products
- brown paper bags
- food storage bags
- metal twist-ties

Should you wish to check if a dish is safe for microwaving, place the empty dish in the microwave oven and microwave on HIGH for 30 seconds. A dish which becomes very hot should not be used.

The following coverings are ideal:

- Paper towels are good for covering foods for reheating and absorbing fat while cooking bacon.
- Wax paper can be used for cooking and reheating.
- Plastic wrap that is specially marked for microwave use can be used for cooking and reheating. DO NOT allow plastic wrap to touch food. Vent so steam can escape.
- Lids that are microwave-safe are a good choice because heat is kept near kept near the food to hasten cooking.
- Microwave oven cooking bags are good for large meats or foods that need tenderizing. DO NOT use metal twist ties. Remember to slit bag so steam can escape.

How to use aluminum foil in your microwave oven:

- Small flat pieces of aluminum foil placed smoothly on the food can be used to shield areas that are either defrosting or cooking too quickly.
- Foil should not come closer than one inch to any surface of the microwave oven.

Should you have questions about utensils or coverings, check a good microwave cookbook or follow recipe suggestions.

ACCESSORIES There are many microwave accessories available for purchase. Evaluate carefully before you purchase so that they meet your needs. A microwave-safe thermometer will assist you in determining correct doneness and assure you that foods have been cooked to safe temperatures. Electrolux is not responsible for any damage to the microwave oven when accessories are used.

ABOUT CHILDREN AND THE MICROWAVE

Children below the age of 7 should use the microwave oven with a supervising person very near to them. Between the ages of 7 and 12, the supervising person should be in the same room.

As with any appliance, close supervision by an adult is necessary when used by children.

At no time should anyone be allowed to lean or swing on the microwave oven door.

Children should be taught all safety precautions: use potholders, remove coverings carefully, pay special attention to packages that crisp food because they may be extra hot.

Don't assume that because a child has mastered one cooking skill he/she can cook everything.

Children need to learn that the microwave oven is not a toy. See page 16 for Child Lock feature.

ABOUT SAFETY

- Check foods to see that they are cooked to the United States Department of Agriculture's recommended temperatures.

160°F	For fresh pork, ground meat, boneless white poultry, fish, seafood, egg dishes and frozen prepared food.
165°F	For leftover, ready-to-reheat refrigerated, and deli and carry-out "fresh" food.
170°F	White meat of poultry.
175°F	Dark meat of poultry.

To test for doneness, insert a meat thermometer in a thick or dense area away from fat or bone. NEVER leave the thermometer in the food during cooking, unless it is approved for microwave oven use.

- ALWAYS use potholders to prevent burns when handling utensils that are in contact with hot food. Enough heat from the food can transfer through utensils to cause skin burns.
- Avoid steam burns by directing steam away from the face and hands. Slowly lift the farthest edge of a dish's covering and carefully open popcorn and oven cooking bags away from the face.
- Stay near the microwave oven while it's in use and check cooking progress frequently so that there is no chance of overcooking food.
- NEVER use the cavity for storing cookbooks or other items.
- Select, store and handle food carefully to preserve its high quality and minimize the spread of foodborne bacteria.
- Keep waveguide cover clean. Food residue can cause arcing and/or fires.
- Use care when removing items from the microwave oven so that the utensil, your clothes or accessories do not touch the safety door latches.

Part Names

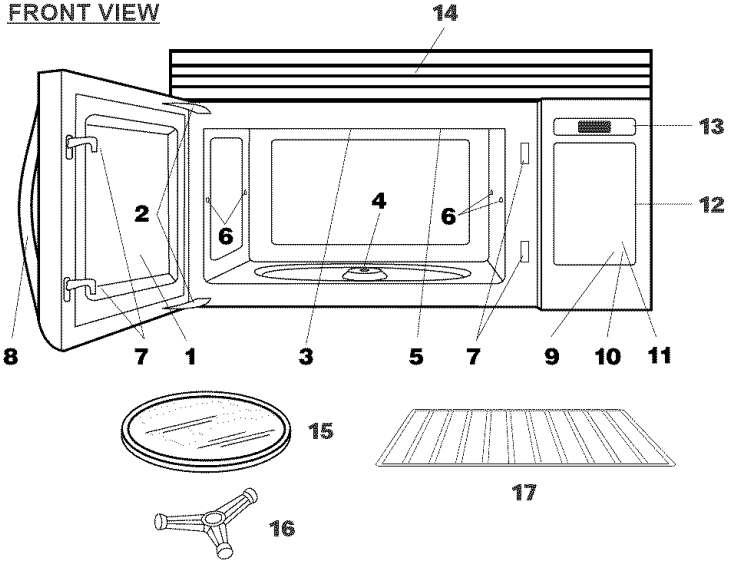

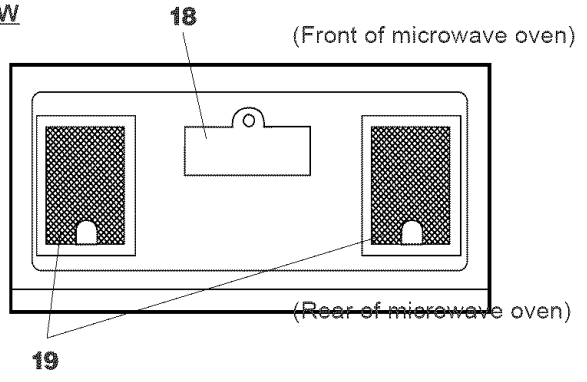

1 Microwave oven door with see-through window
2 Door hinges
3 Waveguide cover: DO NOT REMOVE.
4 Turntable motor shaft
5 Microwave oven light
It will light when microwave oven is operating or door is open.
6 Rack holders
7 Safety door latches
The microwave oven will not operate unless the door is securely closed.
8 Handle
9 Work light pad
Press the Work Light pad to turn light on or off.
10 Night light pad
Press the Night light pad to turn light on or off.
11 Fan Hi/Lo pad
Press the Fan Hi/Lo pad to turn on the fan. Press again for low speed. Press a third time to turn the fan off.
12 Auto-Touch control panel
13 Time display: Digital display, 99 minutes, 99 seconds
14 Ventilation openings
15 Removable turntable
The turntable will rotate clockwise or counterclockwise. Only remove for cleaning.
16 Removable turntable support
First, carefully place the turntable support in the motor shaft in the center of the microwave oven floor. Then, place the turntable on the turntable support securely.
17 Rack for 2-level cooking/reheating
18 Light cover
19 Grease filters

The 7-digit Interactive Display spells out operating steps and shows cooking hints. When HELP is lighted in the display, touch the **Help** pad to read a specific hint which may assist you.

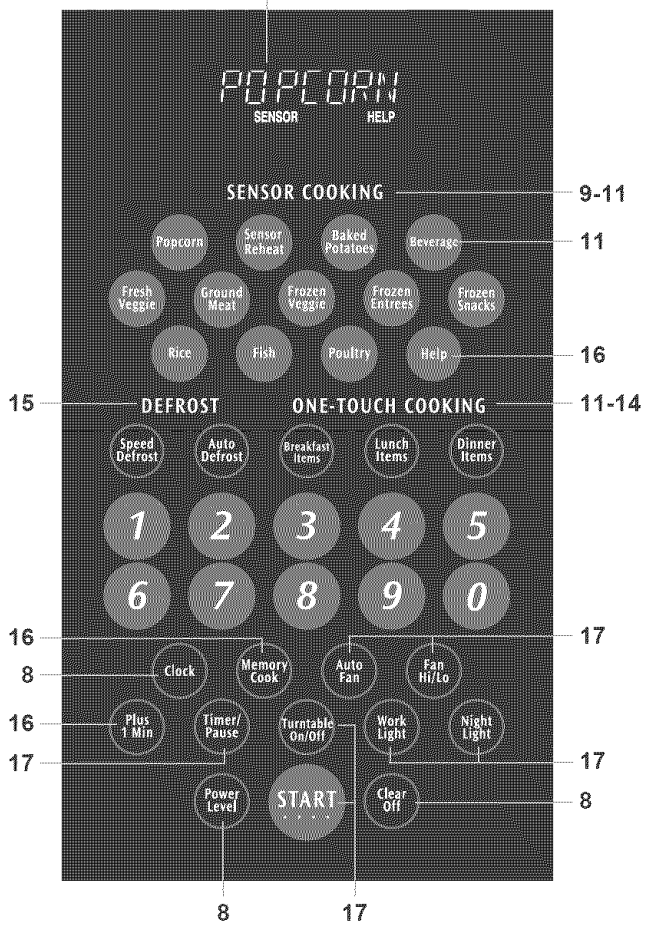

Number next to the control panel illustration indicates page on which there are a feature description and usage information.

Before Operating

- Before operating your new microwave oven make sure you read and understand this Use and Care manual completely.
- Before the microwave oven can be used, follow these procedures:

1. Plug in the microwave oven. Close the door. The microwave oven display will show *WELCOME PRESS CLEAR AND PRESS CLOCK.*
2. Touch the **Clear/Off** pad. : will appear.
3. Set clock.

TO SET THE CLOCK

- Suppose you want to enter the correct time of day 12:30 (A.M. or P.M.).

1. Touch **Clock** pad.
2. Enter time 1,2,3,0 and press **Clock** pad again.

This is a 12 hour clock. If you attempt to enter an incorrect clock time, *ERROR* will appear in the display. Touch the **Clear/Off** pad and re-enter the time.

- If the electrical power supply to your microwave oven should be interrupted, the display will inter-mittently show *WELCOME PRESS CLEAR AND PRESS CLOCK* after the power is reinstated. If this occurs during cooking, the program will be erased. The time of day will also be erased. Simply touch **Clear/Off** pad and reset the clock for the correct time of day.

NOTE: Your microwave oven can be programmed with the door open except for **SENSOR COOKING, START** and **Plus 1 Min.**

CLEAR/OFF

Touch the **Clear/Off** pad to:

1. Erase if you make a mistake during programming.
2. Cancel timer.
3. Stop the microwave oven temporarily during cooking.
4. Return the time of day to the display.
5. Cancel a program during cooking, touch twice.

Manual Operation

TIME COOKING

Your microwave oven can be programmed for 99 minutes 99 seconds (99.99). Always enter the seconds after the minutes, even if they are both zeros.

- Suppose you want to cook for 5 minutes at 100%.

1. Enter cooking time 5,0,0.
2. Touch **START** pad.

TO SET POWER LEVEL

There are eleven preset power levels.

Using lower power levels increases the cooking time, which is recommended for foods such as cheese, milk and long slow cooking of meats. Consult cookbook or recipes for specific recommendations.

TOUCH POWER LEVEL PAD NUMBER OF TIMES FOR DESIRED POWER	APPROXIMATE PERCENTAGE OF POWER	COMMON WORDS FOR POWER LEVELS
POWER LEVEL x 1	100%	High
POWER LEVEL x 2	90%	
POWER LEVEL x 3	80%	
POWER LEVEL x 4	70%	Medium High
POWER LEVEL x 5	60%	
POWER LEVEL x 6	50%	Medium
POWER LEVEL x 7	40%	
POWER LEVEL x 8	30%	Med Low/Defrost
POWER LEVEL x 9	20%	
POWER LEVEL x 10	10%	Low
POWER LEVEL x 11	0%	

- Suppose you want to defrost for 5 minutes at 30%.

1. Enter defrosting time 5,0,0.
2. Touch **Power Level** pad eight times or hold down until the desired power level appears.
3. Touch **START** pad.

When the defrost time is complete, a long tone will sound and *END* will appear in the display.

MANUAL DEFROST

If the food that you wish to defrost is not listed on the SPEED DEFROST or AUTO DEFROST CHART or is above or below the limits in the AMOUNT column on the SPEED DEFROST or AUTO DEFROST CHART, you need to defrost manually.

You can defrost any frozen food, either raw or previously cooked, by using **Power Level** for 30%. Follow the exact 3-step procedure found under TO SET POWER LEVEL. Estimate defrosting time and press **Power Level** pad eight times for 30%.

For either raw or previously cooked frozen food the rule of thumb is approximately 4 minutes per pound. For example, defrost 4 minutes for 1 pound of frozen spaghetti sauce.

Always stop the microwave oven periodically to remove or separate the portions that are defrosted. If food is not defrosted at the end of the estimated defrosting time, program the microwave oven in 1 minute increments on **Power Level** 30% until totally defrosted.

When using plastic containers from the freezer, defrost only long enough to remove from the plastic in order to place in a microwave-safe dish.

SENSOR COOKING

Electrolux's Sensor is a semi-conductor device that detects the vapor (moisture and humidity) emitted from the food as it heats. The sensor adjusts the cooking times and power level for various foods and quantities.

Using Sensor Settings:

1. After microwave oven is plugged in, wait 2 minutes before using SENSOR COOKING.
2. Be sure the exterior of the cooking container and the interior of the microwave oven are dry. Wipe off any moisture with a dry cloth or paper towel.
3. The microwave oven works with foods at normal storage temperature. For example, popcorn would be at room temperature.
4. Any SENSOR COOKING selection can be programmed with More or Less Time Adjustment. See page 17.
5. More or less food than the quantity listed in the chart should be cooked following the guidelines in any microwave cookbook.
6. During the first part of SENSOR COOKING, food name will appear on the display. Do not open the microwave oven door or touch **Clear/Off** during this part of the cooking cycle. The measurement of vapor will be interrupted. If this occurs, an error message will appear. To continue cooking, touch the **Clear/Off** pad and cook manually.

   When the sensor detects the vapor emitted from the food, remainder of cooking time will appear. Door may be opened when remaining cooking time appears on the display. At this time, you may stir or season food, as desired.
7. If the sensor does not detect vapor properly when popping popcorn, the microwave oven will turn off, and the correct time of day will be displayed. If the sensor does not detect vapor properly when cooking other foods, *ERROR* will be displayed, and the microwave oven will turn off.
8. Check food for temperature after cooking. If additional time is needed, continue to cook manually.
9. Each food has a cooking hint. Touch **HELP** pad when the HELP indicator is lighted in the display.
10. To use SENSOR COOKING, touch pad within 3 minutes after cooking, closing the door, touching the **Clear/Off** pad or during cooking.

Covering Foods:

Some foods work best when covered. Use the cover recommended in the SENSOR COOKING CHART for these foods.

1. Casserole lid.
2. Plastic wrap: Use plastic wrap recommended for microwave cooking. Cover dish loosely; allow approximately 1/2 inch to remain uncovered to allow steam to escape. Plastic wrap should not touch food.
3. Wax paper: Cover dish completely; fold excess wrap under dish to secure. If dish is wider than paper, overlap two pieces at least one inch to cover.

Be careful when removing any covering to allow steam to escape away from you.

SENSOR REHEAT

You can cook many foods by touching just one pad. You don't need to calculate cooking time or power level.

- Suppose you want to reheat canned chili.

1. Touch **Sensor Reheat** pad. When sensor detects the vapor emitted from the food, remainder of reheating time will appear.
2. At end, follow the directions in the display.

NOTE: The Turntable On/Off, Sensor Reheat, Popcorn, Fresh Veggie and Poultry settings have 2 choices. Follow directions in the Interactive Display to choose desired option.

USING THE RACK

The rack allows several foods to be cooked or reheated at one time. However, for the best cooking and reheating, use the turntable on and the automatic features.

When using the rack, set time and power level manually. Allow plenty of space around and between the dishes. Pay close attention to the cooking/reheating progress. Reposition the foods and reverse them from rack to turntable at least once during any cooking or reheating time. Using a lower power level will assist in better cooking/reheating uniformity.

AVOID:

- Storing the rack in the microwave oven when not in use.
- Popping popcorn on the turntable with the rack in the microwave oven.
- Using any browning dish on the rack.
- Using special features with the rack. Special features are designed to be used with foods only on the revolving turntable.
- Cooking directly on the rack—use microwave-safe cookware.

SENSOR REHEAT CHART

FOOD	AMOUNT	PROCEDURE
Sensor Reheat: Turntable On	4 - 36oz	Place in dish or casserole slightly larger than amount to be reheated. Flatten, if possible. Cover with lid, plastic wrap or wax paper. Use covers such as plastic wrap or lids with larger quantities of more dense foods such as stews. After reheating, stir well, if possible. Foods should be very hot. If not, continue to heat with variable power and time. After stirring, re-cover and allow to stand 2 to 3 minutes.
Turntable Off Stirrable	13 x 9 x 2 glass utility casserole	Ideal for reheating stirrable casseroles, such as macaroni and cheese or stew. Cover with vented plastic wrap or wax paper. Touch **Sensor Reheat** twice and at signal, stir casserole and rotate dish. Touch **START**. At end, stir and allow to stand, covered, for 5 to 10 minutes.
Non-stirrable	13 x 9 x 2 glass utility casserole	Ideal for reheating non-stirrable casseroles, such as lasagna. Cover with vented plastic wrap or wax paper. Touch **Sensor Reheat** three times and at signal, rotate dish. Touch **START**. At end, allow to stand, covered, for 10 to 15 minutes.

OTHER SENSOR COOKING SETTINGS

SENSOR COOKING will automatically compute the microwave power and cooking time for foods shown in the chart below. You don't need to enter the weight or quantity of the food.

• Suppose you want to cook fresh broccoli.

1. Touch **Fresh Veggie** pad once for soft vegetables.
   When sensor detects the vapor emitted from the food, remainder of cooking time will appear.
2. At end, follow the directions in the display.

SENSOR COOKING CHART

FOOD	AMOUNT	PROCEDURE
Popcorn	1 package 3.0 - 3.5 oz (Reg.) 1.5 - 1.75 oz (Snack)	Use only popcorn packaged for microwave oven use. Try several brands to decide which you like the best. Press **Popcorn** pad once for regular size bags. Press **Popcorn** pad twice for snack size bags. Do not try to pop unpopped kernels.
Baked Potatoes	1 - 6 med.	Pierce. Place on paper-towel-lined turntable. After cooking, remove from microwave oven, wrap in aluminum foil and let stand 5 to 10 minutes.
Fresh Veggie: Soft		Wash and place in casserole. Add no water if vegetables have just been washed. Cover with lid for tender vegetables. Use plastic wrap for tender-crisp vegetables. Touch **Fresh Veggie** pad once. After cooking, stir, if possible. Let stand, covered, for 2 to 5 minutes.
Broccoli	.25 - 2.0 lb	
Brussels sprouts	.25 - 2.0 lb	
Cabbage	.25 - 2.0 lb	
Cauliflower (flowerets)	.25 - 2.0 lb	
Cauliflower (whole)	1 med.	
Spinach	.25 - 1.0 lb	
Zucchini	.25 - 2.0 lb	
Baked apples	2 - 4 med.	
Fresh Veggie: Hard		Place in casserole. Add 1-4 tbsp water. Cover with lid for tender vegetables. Use plastic wrap cover for tender-crisp vegetables. Touch **Fresh Veggie** pad twice. After cooking, stir, if possible. Let stand, covered, for 2 to 5 minutes.
Carrots, sliced	.25 - 1.5 lb	
Corn on the cob	2 - 4	
Green beans	.25 - 1.5 lb	
Winter squash:		
diced	.25 - 1.5 lb	
halves	1 - 2	
Frozen Entrees	6 - 17 oz	Use this pad for frozen convenience foods. It will give satisfactory results for most brands. You may wish to try several and choose your favorite. Remove package from outer wrapping and follow package directions for covering. After cooking, let stand, covered, for 1-3 minutes.
Frozen Snacks	3 - 8 oz	Use for frozen French fries, cheese sticks, appetizers etc. Remove from outer package. Follow package directions for how to wrap or cover. Be careful when removing from the microwave oven as snack may be very hot.
Frozen Veggie	.25 - 1.25 lb	Add no water. Cover with lid or plastic wrap. After cooking, stir and let stand, covered, for 3 minutes.
Ground Meat	.25 - 2.0 lb	Use this setting to cook ground beef or turkey as patties or in a casserole to be added to other ingredients. Place patties on a microwave-safe rack and cover with wax paper. Place ground meat in a casserole and cover with wax paper or plastic wrap. When microwave oven stops, turn patties over or stir meat in casserole to break up large pieces. Re-cover and touch **START**. After cooking, let stand, covered, for 2 to 3 minutes.
Rice	.5 - 2.0 cups	Place rice into a deep casserole and add double quantity of water. Cover with lid or plastic wrap. After cooking, stir, cover and let stand 3 to 5 minutes or until all liquid has been absorbed.

SENSOR COOK CHART (CONT.)

FOOD	AMOUNT	PROCEDURE
Poultry		
Boneless	.5 - 2.0 lb	Use boneless breast of chicken or turkey. Cover with vented plastic wrap. Touch **Poultry** pad once. When microwave oven stops, rearrange. Re-cover and touch **START** pad. After cooking, let stand, covered, 3-5 minutes. Poultry should be 160°F.
With bone	.5 - 3.0 lb	Arrange pieces with meatiest portions toward outside of glass dish or microwave-safe rack. Cover with vented plastic wrap. Touch **Poultry** pad twice. After cooking, let stand, covered, 3-5 minutes. Dark meat should be 180°F and white meat should be 170°F.
Fish	.25 - 2.0 lb	Arrange in ring around shallow glass dish (roll fillet with edges underneath). Cover with vented plastic wrap. After cooking, let stand, covered for 3 minutes.

BEVERAGE

Beverage enables you to reheat coffee or tea to restore to a more suitable drinking temperature or to make instant coffee or tea.

• Suppose you want to make 2 cups of coffee.

1. Touch **Beverage** pad.
2. Touch **Beverage** pad once more and then touch number 1 pad 2 times for 2 cups
3. Touch **START** pad.

After cooking, follow the directions in display.

NOTE:

1. Beverage can be programmed with More or Less Time Adjustment. See page 17.
2. Touch **Help** pad when the HELP indicator is lighted in the display, for a helpful hint.
3. Should you attempt to enter more or less than the allowed amount, an error message will appear in the display.

   More or less than the quantity listed in the chart should be made following the guidelines in any microwave book.

BEVERAGE CHART

FOOD	AMOUNT	PROCEDURE
Make coffee/tea	1 - 4 cups	Use this setting for heating COLD TAP WATER to a temperature somewhat below the boiling point to make instant coffee or tea. Touch number 1 pad for 1 cup increase per touch. Stir liquid briskly before and after heating to avoid "eruption".
Reheat	.5 - 2.0 cups	This setting is good for restoring cooled beverage to a better drinking temperature. Touch number 2 pad for a 0.5 cup increase per touch. Stir after heating.

ONE-TOUCH COOKING

Your microwave oven has 3 convenient pads to assist with meal preparation. There are some foods in the Breakfast Items and Lunch Items that use the sensor. See the SENSOR COOKING information on page 9. For foods not using the sensor, follow the directions in the Interactive Display to enter quantity.

Breakfast Items

Breakfast Items is for preparing popular breakfast foods.

• Suppose you want to use Breakfast Items to cook 2 servings of hot cereal.

1. Touch **Breakfast Items** pad.
2. Touch **Breakfast Items** pad three more times to select hot cereal. If you want to cook 2 servings, touch number 2 pad.
3. Touch **START** pad.

After cooking, follow the directions in display.

NOTE:

1. Heat rolls/muffins setting has 2 choices. Follow directions in the Interactive Display to choose desired option.
2. Breakfast Items can be programmed with More or Less Time Adjustment. See page 17.
3. Each food has a cooking hint. Touch Custom **Help** pad when the HELP indicator is lighted in the display.
4. Should you attempt to enter more or less than the allowed amount, an error message will appear in the display.

   More or less than the quantity listed in the chart should be cooked following the guidelines in any microwave cookbook.
5. The final cooking result will vary according to the food condition (e.g. initial temperature, shape, quality). Check food for temperature after cooking. If additional time is needed, continue to cook manually.

BREAKFAST ITEMS CHART

*It is not necessary to enter AMOUNT.

FOOD	AMOUNT	PROCEDURE
1. Scrambled eggs	1 - 9 eggs	For each egg, use 1 teaspoon of butter or margarine and 1 tablespoon of milk. Place butter or margarine in dish, measuring cup or casserole large enough for the egg to expand. Mix egg and milk together. Pour on to butter or margarine in dish. Place in microwave oven and program. When audible signals are heard, stir egg mixture moving the cooked portion to the center of the dish and uncooked portion to the outside. After cooking, stir and let stand, covered, until set. Note that eggs will be slightly undercooked when removed from the microwave oven.
2. Bacon*	2 - 6 strips	Place bacon on paper plate, lined with paper towel. Bacon should not extend over the rim of plate. Cover with another paper towel. Allow bacon to stand a few minutes after removing from the microwave oven to complete the cooking.
3. Hot cereal	1 - 6 servings	Use individual packets or bulk cereal in your favorite variety: oatmeal, oat bran, cream of wheat, farina or wheatena. Follow package directions for the correct amount of water or milk. To prevent boilovers, it is very important to choose a large container because microwave cooking of cereal causes high boiling. When microwave oven stops, stir and touch **START**. After cooking, stir and let stand, covered, for 2 minutes.
4. Heat rolls/ muffins		Use this pad to warm rolls, muffins, biscuits, bagels etc. Large items should be considered as 2 or 3 regular size. Arrange on plate: cover with paper towel.
Fresh	1 - 8 pcs.	To warm fresh rolls and muffins, touch **Breakfast Items** pad 5 times and touch number 1 pad. Then enter desired quantity and touch **START** pad. For refrigerated rolls or muffins, it may be necessary to double the entered amount to ensure the proper serving temperature. For example, enter quantity of 2 for 1 refrigerated muffin.
Frozen	1 - 8 pcs.	For frozen rolls and muffins, touch **Breakfast Items** pad 5 times and touch number 2 pad. Then enter desired quantity and touch **START** pad.
5. Frozen breakfast foods*	1 (3 - 6 oz)	This setting works well for frozen breakfast entrees, pancakes, waffles, burritos etc. Follow manufacturer's directions for how to prepare for microwaving. Allow to stand 1 or 2 minutes after cooking.

Lunch Items

Lunch Items is for cooking/heating foods that take a short amount of time!

• Suppose you want to use Lunch Items to heat 2 cups of soup.

1. Touch **Lunch Items** pad.
2. Touch **Lunch Items** pad three more times to select soup.
3. Touch **START** pad.

After cooking, follow the directions in display.

NOTE:

1. Lunch Items can be programmed with More or Less Time Adjustment. See page 17.
2. Each food has a cooking hint. Touch **Help** pad when the HELP indicator is lighted in the display.
3. More or less than the quantity listed in the chart should be cooked following the guidelines in any microwave cookbook.
4. The final cooking result will vary according to the food condition (e.g. initial temperature, shape, quality). Check food for temperature after cooking. If additional time is needed, continue to cook manually.

LUNCH ITEMS CHART

It is not necessary to enter AMOUNT.

FOOD	AMOUNT	PROCEDURE
1. Meal in a cup	1 cup	This setting is ideal for individual portions of canned food packed in a small microwaveable container, usually 6 to 8 ounces. Remove inner metal lid and replace outer microwaveable lid. After cooking, stir food and allow to stand 1 or 2 minutes.
2. Hot dogs in buns	1 - 4	Place hot dog in bun. Wrap each with paper towel or napkin.
3. Soup	1 - 6 cups	Place in bowl or casserole. Cover with lid or plastic wrap. At end, stir, re-cover and let stand 1 to 3 minutes.
4. Microwave pizza	1 (6 - 8 oz)	Use for frozen microwave pizza. Remove from package and unwrap. Follow package directions for use of package and/or silver crisping disk.
5. Frozen sandwich	1 (3 - 6 oz)	Use for frozen microwaveable sandwiches. Remove from package and follow directions for placing in the microwave oven.

Dinner Items

Dinner Items will cook any of the dinners listed in the chart by simply following the directions in the Interactive Display. There are 2 recipes in each section. Choose one and follow ingredients and instructions.

- Suppose you want to use Dinner Items to cook Spicy Couscous Pockets in ground beef dinner.

1. Touch **Dinner Items** pad.
2. Touch **Dinner Items** pad once more to select ground beef.
3. Touch **START** pad.

NOTE:

1. Dinners Items can be programmed with More or Less Time Adjustment. See page 17.
2. Each food has a cooking hint. Touch **Help** pad when the HELP indicator is lighted in the display.

DINNERS ITEMS RECIPES (Recipes serve 6)

1. GROUND BEEF DINNER

Spicy Couscous Pockets

Place in a 3 quart casserole:

- 1 1/4 pounds lean ground beef (85% lean or better)
- 1 can (14.5 ounces) diced tomatoes
- 1 can (8 ounces) tomato sauce
- 1 cup water
- 1 large onion, chopped
- 1/4 cup chopped green pepper
- 3/4 cup couscous
- 1 clove garlic, minced
- 1 1/2 tablespoons chili powder
- 1 teaspoon ground cumin
- 1 teaspoon dried oregano leaves

Stir well and cover. Touch **Dinner Items** 2 times and touch **START**.
At pause, stir well and add:

- 1 cup raisins

Recover. Touch **START**.
Serve spooned into pita pockets.

Speedy Shepherd's Pie

Combine the following and spread evenly in a 11" x 7" rectangular casserole:

- 1 1/2 pounds lean ground beef (85% lean or better)
- 1 cup dry bread crumbs
- 1/2 cup catsup
- 1 onion, minced
- 1 egg

Touch **Dinner Items** 2 times and touch **START**.
At pause, top ground beef mixture with:

- 2 cups frozen peas and carrots

Top peas and carrots with:

- 4 cups prepared mashed potatoes (either freshly made or reconstituted from dry)

Touch **START**.
Serve with gravy (canned or made from a mix).

2. CHICKEN DINNER

Yellow Rice with Chicken

Place in a 3 quart casserole:

- 1 package (5 - 8 ounces) yellow rice mix with flavor packet
- 2 cups chicken broth

Stir well and cover. Touch **Dinner Items** 3 times and touch **START**.
At pause, stir well and add:

- 1 cup frozen peas
- 1 red pepper, diced
- 1 1/4 pounds boneless chicken cutlets, sliced into thin strips

Recover. Touch **START**.
At end, garnish with parsley.

Chicken with Fruited Stuffing

Place in a 3 quart casserole:

- 1 package (6 ounces) cornbread or apple and raisin stuffing mix with flavor packet
- 1 cup apple juice
- 1 1/2 cups chicken broth
- 3 tablespoons butter, cut into cubes
- 2 apples, peeled, cored and cut into cubes
- 1/3 cup raisins

Stir well and cover. Touch **Dinner Items** 3 times and touch **START**.
At pause, stir well and add:

- 3 cups string beans, cut into 1" pieces
- 1 1/4 pounds boneless chicken cutlets, sliced into thin strips

Recover. Touch **START**.
At end, garnish with toasted slivered almonds.

3. BEEF OR PORK DINNER

Sweet and Sour Pork with Rice

Place in a 3 quart casserole:
- 1 cup rice
- 2 cups pineapple juice
- 1/4 cup apricot/peach sauce, sweet and sour sauce or duck sauce
- 2 tablespoons soy sauce
- 1 tablespoon fresh ginger, minced

Stir well and cover. Touch **Dinner Items** 4 times and touch **START**.
At pause, stir well and add:
- 1/4 cup honey
- 1 1/4 pounds boneless, lean, pork loin, cut into thin strips
- 1 can (20 ounces) pineapple cubes, drained
- 3 cups fresh or frozen stir-fry vegetables (pea pods, celery, water chestnuts, carrots, peppers, etc.)

Recover. Touch **START**.
At end, garnish with toasted almonds.

Beef with Broccoli and Rice

Place in a 3 quart casserole:
- 1 cup white rice
- 3 tablespoons Teriyaki sauce
- 1 tablespoon Hoisin sauce
- 2 1/2 cups beef broth

Stir well and cover. Touch **Dinner Items** 4 times and touch **START**.
At pause, stir well and add:
- 1 1/4 pounds beef top round, sliced thin against the grain (1/4" thick)
- 4 scallions, diced
- 4 cups broccoli florets
- 1 large onion, sliced very thinly

Recover. Touch **START**.

4. SEAFOOD DINNER

Creamy Seafood Pasta

Place in a 3 quart casserole:
- 8 - 9 ounces fresh tortellini
- 2 cups water

Stir well and cover. Touch **Dinner Items** 5 times and touch **START**.
At pause, stir well and add:
- 1 jar (17 ounces) creamy Alfredo sauce or 1 3/4 cups of medium, white cheese sauce
- 1 1/4 pounds combination raw shellfish, fresh or thawed (shrimp, bay scallops, crabmeat)
- 3 cups mixed, fresh vegetables (sliced mushrooms, thinly julienned carrots, green beans)

Recover. Touch **START**.
At end, garnish with:
- 1/3 cup grated Parmesan cheese

Greek Fusilli with Eggplant and Shrimp

Place in a 3 quart casserole:
- 2 cloves garlic, minced
- 1 large onion, thinly sliced
- 1 jar (28 ounces) marinara sauce
- 1 cup water or dry white wine
- 2 cups (6 ounces) tricolor pasta
- 1 medium eggplant (approximately one pound), peeled and cut into large cubes

Stir well and cover. Touch **Dinner Items** 5 times and touch **START**.
At pause, stir well and add:
- 1 1/4 pounds raw shrimp (fresh or thawed), peeled and deveined

Recover. Touch **START**.
At end, top with:
- 3/4 -1 cup crumbled feta cheese

5. VEGETARIAN DINNER

Garden Au Gratin

Place in a 3 quart casserole:
- 1 1/2 pounds baking potatoes, cut into eighths, thinly sliced
- 1 can (14.5 ounces) diced tomatoes
- 1 tablespoon minced garlic
- 1 teaspoon thyme leaves

Stir well and cover. Touch **Dinner Items** 6 times and touch **START**.
At pause, stir well and add:
- 1 bag (16 ounces) frozen pepper stir fry mix or 4 cups thinly sliced fresh peppers and onions
- 3 cups thinly sliced summer squash or combination of broccoli, cauliflower and squash

Recover. Touch **START**.
At end, stir completely and garnish with:
- 6 ounces shredded Cheddar cheese

Orzo with Sun-Dried Tomatoes and Artichokes

Place in a 3 quart casserole:
- 1 cup orzo or other tiny shaped pasta
- 3 1/2 cups vegetable or chicken broth
- 1/4 cup pesto sauce (fresh or reconstituted from dry)
- 1/2 cup small pieces of sundried tomatoes
- 1 tablespoon minced garlic
- 1 tablespoon Italian seasoning

Stir well and cover. Touch **Dinner Items** 6 times and touch **START**.
At pause, stir well and add:
- 3 cups chopped green, red, orange or yellow peppers
- 1 onion, thinly sliced
- 1 can (14 ounces) artichoke hearts, drained and quartered
- 1 can (3 ounces) pitted, ripe olives, drained and halved

Recover. Touch **START**.
At end, stir and garnish top with:
- 1/2 cup freshly shredded Parmesan cheese
- 1/4 cup pine nuts

DEFROST

Speed Defrost

Speed Defrost rapidly defrosts specific foods and weights found in the SPEED DEFROST CHART below.

• Suppose you want to defrost 1.0 pound boneless poultry.

1. Touch **Speed Defrost** pad once.
2. Touch **Speed Defrost** pad two more times to select boneless poultry.
3. Touch **START** pad.

The microwave oven will stop so the food can be checked. Turn food over and separate into pieces.

4. Touch **START** pad.

After defrost cycle ends, let stand for 3-5 minutes.

NOTE:

1. To defrost foods above or below the weights allowed on the SPEED DEFROST CHART, use Auto Defrost or Manual Defrost. See Auto Defrost below or Manual Defrost on page 8.
2. Speed Defrost can be programmed with More or Less Time Adjustment. See page 17.
3. Touch **Help** pad when the HELP indicator is lighted in the display for a helpful hint.

SPEED DEFROST CHART

It is not necessary to enter AMOUNT.

FOOD	AMOUNT	PROCEDURE
1. Ground meat	1.0 lb	At pause, turn over, removed any thawed pieces and break remainder apart. At end, let stand, covered, for 3 to 5 minutes.
2. Boneless poultry	1.0 lb	At pause, turn over and separate into pieces. At end, let stand, covered, for 3 to 5 minutes.
3. Bone-in poultry	2.0 lb	At pause, turn over and separate into pieces. At end, let stand, covered, for 3 to 5 minutes.

NOTE: Speed Defrost provides just enough defrosting that the foods can be used in recipes or for cooking. There will be some ice crystals remaining.

Auto Defrost

Auto Defrost automatically defrosts all the foods found in the AUTO DEFROST CHART below.

• Suppose you want to defrost a 2.0 pound steak.

1. Touch **Auto Defrost** pad once.
2. Touch **Auto Defrost** pad two more times to select steak.
3. Enter weight 2,0 for 2.0 lb steak.
4. Touch **START** pad.

The microwave oven will stop so the food can be checked. Turn food over and cover edges.

5. After the 1st stage, open the door. Turn steak over and shield any warm portions. Close the door. Touch **START** pad.
6. After the 2nd stage, open the door. Shield any warm portions. Close the door. Touch **START** pad.

After defrost cycle ends, let stand, covered.

NOTE:

1. To defrost other food or foods above or below the weights allowed on the AUTO DEFROST CHART, use Manual Defrost.
2. Auto Defrost can be programmed with More or Less Time Adjustment. See page 17.
3. Touch **Help** pad when the HELP indicator is lighted in the display for a helpful hint.
4. If you attempt to enter more or less than the amount as indicated in the chart below, an error message will appear in the display.

AUTO DEFROST CHART

FOOD	AMOUNT	PROCEDURE
1. Ground meat	.5 - 3.0 lb	Remove any thawed pieces after each stage. Let stand, covered, for 5 to 10 minutes.
2. Steaks, chops or fish	.5 - 4.0 lb	After each stage, rearrange and if there are warm or thawed portions, shield with small flat pieces of aluminum foil. Remove any meat or fish that is almost defrosted. Let stand, covered, for 10 to 20 minutes.
3. Bone-in poultry	.5 - 3.0 lb	After each stage, rearrange pieces or remove portions should they become warm or thawed. Let stand, covered, for 10 to 20 minutes.
4. Roast	2.0 - 4.0 lb	Start defrosting with fat side down. After each stage, turn roast over and shield the warm portions with aluminum foil. Let stand, covered, for 30 to 60 minutes.
5. Casserole	2 - 6 cups	After audible signal, stir if possible. At end, stir well and let stand, covered, for 5 to 10 minutes.
6. Soup	1 - 6 cups	After audible signal, stir if possible. At end, stir well and let stand, covered, for 5 to 10 minutes.

HELP

Help provides 4 features that make using your microwave oven easy because specific instructions are provided in the interactive display.

1. Child Lock

The Child Lock prevents unwanted microwave oven operation such as by small children. The microwave oven can be set so that the control panel is deactivated or locked. To set, touch **Help**, the number 1 and then touch the **START** pad. Should a pad be touched, *CHILD LOCK ON* will appear in the display.

To cancel, touch **Help** and **Clear/Off** pad.

2. Audible Signal Elimination

If you wish to have the microwave oven operate with no audible signals, touch **Help**, the number 2 and **Clear/Off**.

To cancel and restore the audible signal, touch **Help**, the number 2 and **START**.

3. Auto Start

If you wish to program your microwave oven to begin cooking automatically at a designated time of day, follow this procedure:

- Suppose you want to start cooking a stew for 20 minutes on 50% at 4:30. Before setting, check to make sure the clock is showing the correct time of day.

1. Touch **Help** pad.
2. Touch number 3.
3. Enter numbers 4,3,0 for start time.
4. Touch **Clock** pad.
5. Enter cooking program by touching number 2,0,0,0 and **Power Level** pad 6 times.
6. Touch **START** pad.

NOTE:

1. Auto Start can be used for manual cooking if clock is set.
2. If the microwave oven door is opened after programming Auto Start, it is necessary to touch the **START** pad for Auto Start time to appear in the readout so that the microwave oven will automatically begin programmed cooking at the chosen Auto Start time.
3. Be sure to choose foods that can be left in the microwave oven safely until the Auto Start time. Acorn or butternut squash are often a good choice.
4. If you wish to know the time of day, simply touch the **Clock** pad. As long as your finger is touching the **Clock** pad, the time of day will be displayed.

4. Language/Weight Selection

The microwave oven comes set for English and U.S. Customary Unit-pounds. To change, touch **Help** and the number 4. Continue to touch the number 4 until your choice is selected from the table below. Then, touch **START**.

Touch number 4 once for English/LB.

Touch number 4 twice for English/KG.

Touch number 4 three times for Spanish/LB.

Touch number 4 four times for Spanish/KG.

MEMORY COOK

To set Memory Cook

Memory Cook allows you to set 1 set of cooking instructions in memory for quick recall.

- Suppose you want to program into Memory Cook your favorite cooking instructions for Nachos: 1 minute and 45 seconds at 70% power.

1. Touch **Memory Cook** pad.
2. Touch **Memory Cook** pad again to enter cooking time.
3. Touch numbers 1,4,5 to enter cooking time.
4. Touch **Power Level** pad 4 times for 70% power.
5. Touch **Memory Cook** pad.

NOTE: It is necessary to touch **Memory Cook** twice to enter the new program. Memory Cook cannot be programmed with turntable off.

To use Memory Cook

- Suppose you want to cook Nachos with Memory Cook.

1. Touch **Memory Cook** pad.
2. Touch **START** pad.

MULTIPLE SEQUENCE COOKING

Your microwave oven can be programmed for up to 4 automatic cooking sequences, switching from one power level setting to another automatically.

Sometimes cooking directions tell you to start on one power level and then change to a different power level. Your microwave oven can do this automatically.

- Suppose you want to cook roast beef for 5 minutes at 100% and then continue to cook for 30 minutes at 50%.

1. First enter cooking time. Then touch **Power Level** pad once for 100% power.
2. Then enter second cooking time. Touch **Power Level** pad 6 times for 50% power.
3. Touch **START** pad.

NOTE:

1. If **Power Level** pad is touched, *HIGH* will be displayed.
2. If 100% is selected as the final sequence, it is not necessary to touch the **Power Level** pad.

PLUS 1 MIN

Plus 1 Min allows you to cook for a minute at 100% by simply touching the **Plus 1 Min** pad. You can also extend cooking time in multiples of 1 minute by repeatedly touching the **Plus 1 Min** pad during manual cooking.

NOTE:

1. To use **Plus 1 Min**, touch pad within 3 minutes after cooking, closing the door, touching the **Clear/Off** pad or during cooking.
2. **Plus 1 Min** cannot be used with SENSOR COOKING, DEFROST or ONE-TOUCH COOKING.

DEMONSTRATION MODE

To demonstrate, touch **Clock**, the number 0 and touch **START** and hold for 3 seconds. *DEMO ON* will appear in the display. Cooking operations and specific special features can now be demonstrated with no power in the microwave oven. For example, touch **Clear/Off** and touch **Plus 1 Min**, and the display will show *1:00* and count down quickly to *END.*

To cancel, touch **Clock**, then the number 0 and **Clear/Off**. If easier, unplug the microwave oven from the electrical outlet, replug and set the clock.

MORE OR LESS TIME ADJUSTMENT

Should you discover that you like any of the SENSOR COOKING or ONE-TOUCH COOKING settings slightly **more** done, touch the **Power Level** pad once after touching your choice of pads and touch **START** pad. For slightly **less** done, touch the **Power Level** pad twice after touching your choice of pad and touch **START** pad.

START

START allows you to cook at 100% power by touching the **START** pad continuously. **START** is ideal for melting cheese, bringing milk to just below boiling etc. The maximum cooking time is 3 minutes.

• Suppose you want to melt cheese on a piece of toast.

1. Continuously touch **START** pad. The cooking time will begin counting up.
2. When the cheese is melted to desired degree, remove finger from **START** pad. Microwave oven stops immediately.

NOTE:

1. Note time it takes for frequently used foods and program that time in the future.
2. Touch **START** pad within 3 minutes after cooking, opening and closing the door or touching the **Clear/Off** pad.
3. **START** can only be used 3 times in a row. If more times are needed, open and close door or touch **Clear/Off** pad.

TURNTABLE ON/OFF

For most cooking, the turntable should be on; however the turntable can be turned off so that it does not rotate when extra large dishes, such as the popular 13 x 9 x 2 glass utility casserole, are used. The casserole should be placed on the turntable so that it is level.

• Suppose you want to cook lasagna in a 13 x 9 x 2 casserole for 45 minutes.

1. Enter cooking time 4,5,0,0.
2. Touch **Turntable On/Off** pad.
3. Touch **START** pad.

TIMER

• Suppose you want to time a 3 minute long distance phone call.

1. Touch **Timer/Pause** pad.
2. Touch 3,0,0 to enter time.
3. Touch **Timer/Pause** pad. The Timer will count down.

PAUSE

• Suppose you want to pause during multiple sequence cooking.

1. Enter cooking time and desired power level.
2. Touch **Timer/Pause** pad.
3. Enter second cooking time and desired power level.
4. Touch **START** pad.

Your microwave oven can be paused for up to 3 automatic cooking sequences.

AUTO FAN

The fan can be set to turn off automatically. Touch **Auto Fan** and enter the number of minutes you wish for the fan to operate. Touch **Auto Fan.** It is automatically set for the high fan speed. If you wish to have the low fan speed, touch **Auto Fan**, enter the number of minutes you wish for the fan to operate, touch **Auto Fan** and then touch **Fan Hi/Lo** once. Touch **Fan Hi/Lo** twice if you wish to stop the fan during operation.

FAN HI/LO

The fan will automatically start when heat rises from range surface units or burners. This protects the microwave oven from excessive temperature rise. The fan will stay on until the temperature decreases. It cannot be turned off manually during this time.

For other uses, touch **Fan Hi/Lo** pad to select fan speed or turn fan off.

WORK LIGHT

Touch the **Work Light** pad one time to turn on and again to turn the light off.

NIGHT LIGHT

Touch the **Night Light** pad one time to turn on and again to turn the light off. This setting assures enough light to move about in a darkened kitchen.

HELP (In display)

Whenever HELP is lighted in the Interactive Display, touch **Help** to read cooking and operating hints.

EXTERIOR

The outside surface is precoated steel and plastic. Clean the outside with mild soap and water; rinse and dry with a soft cloth. Do not use any type of household or abrasive cleaner.

DOOR

Wipe the window on both sides with a damp cloth to remove any spills or spatters. Metal parts will be easier to maintain if wiped frequently with a damp cloth. Avoid the use of spray and other harsh cleaners as they may stain, streak or dull the door surface.

TOUCH CONTROL PANEL

Care should be taken in cleaning the touch control panel. If the control panel becomes soiled, open the microwave oven door before cleaning. Wipe the panel with a cloth dampened slightly with water only. Dry with a soft cloth. Do not scrub or use any sort of chemical cleaners. Close door and touch **Clear/Off**.

INTERIOR

Cleaning is easy because little heat is generated to the interior surfaces; therefore, there is no baking and setting of spills or spattering. To clean the interior surfaces, wipe with a soft cloth and warm water. DO NOT USE ABRASIVE OR HARSH CLEANERS OR SCOURING PADS. For heavier soil, use baking soda or a mild soap; rinse thoroughly with hot water. The rack can be cleaned with hot soapy water, rinsed and dried.

WAVEGUIDE COVER

The waveguide cover is located on the ceiling in the microwave oven cavity. It is made from mica so requires special care. Keep the waveguide cover clean to assure good microwave oven performance. Carefully wipe with a damp cloth any food spatters from the surface of the cover immediately after they occur. Built-up splashes may overheat and cause smoke or possibly catch fire. DO NOT REMOVE THE WAVEGUIDE COVER.

ODOR REMOVAL

Occasionally, a cooking odor may remain in the microwave oven. To remove, combine 1 cup water, grated peel and juice of 1 lemon and several whole cloves in a 2-cup glass measuring cup. Boil for several minutes using 100% power. Allow to set in microwave oven until cool. Wipe interior with a soft cloth.

TURNTABLE/TURNTABLE SUPPORT

The turntable and turntable support can be removed for easy cleaning. Wash them in mild, sudsy water; for stubborn stains use a mild cleanser and non-abrasive scouring sponge. They are also dishwasher-proof. Use upper rack of dishwasher. The turntable motor shaft is not sealed, so excess water or spills should be wiped up immediately.

GREASE FILTERS

Filters should be cleaned at least once a month. Never operate the fan or microwave oven without the filters in place.

1. Pull down slightly on the tab toward the front of the microwave oven and remove the filter. Repeat for the other filter.
2. Soak the filters in a sink or dish pan filled with hot water and detergent. DO NOT use ammonia or other alkali; they will react with the filter material and darken it.
3. Agitate and scrub with a brush to remove embedded dirt.
4. Rinse thoroughly and shake dry.
5. Replace by fitting the filter back into the opening.

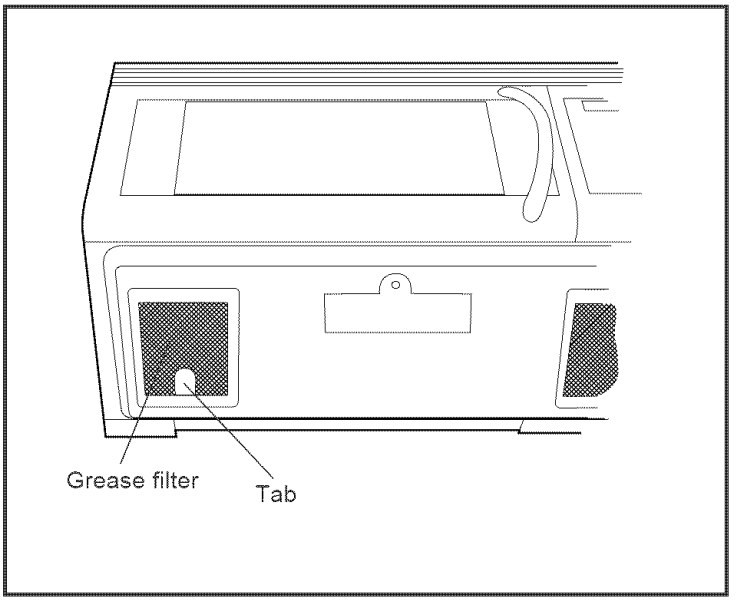

CHARCOAL FILTER

Charcoal Filter, which was enclosed with your microwave oven, is used for nonvented, recirculated installation. The filter should be changed every 6 to 12 months depending on use.

1. Disconnect power to the microwave oven at the circuit breaker panel or by unplugging.
2. Remove the louver mounting screws.
3. Pull the louver away from the unit.
4. Change the charcoal filter.
5. Carefully push the louver back into place and replace the screws removed in step 2.

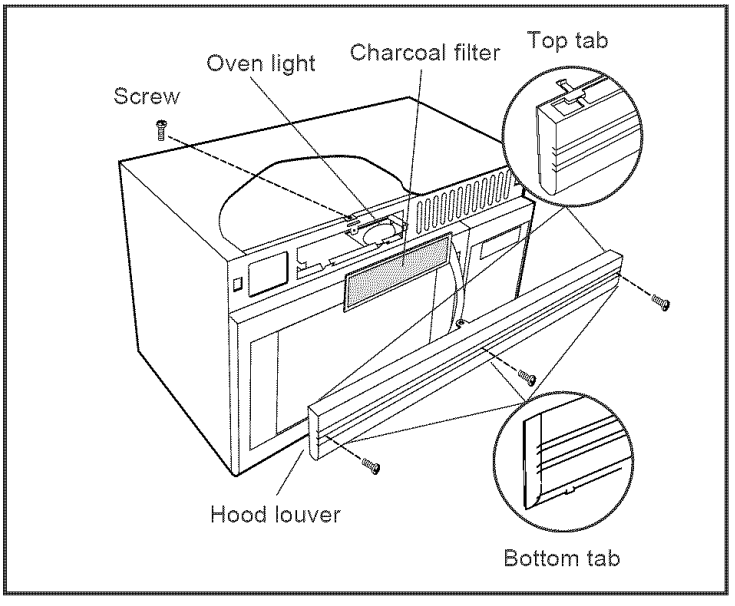

MICROWAVE OVEN LIGHT

Remove the louver per instructions 1-3 above and charcoal filter, if used.

1. To replace light bulb, first disconnect power to the microwave oven at the circuit breaker panel or by unplugging.
2. Open light cover located behind filter mounting by carefully pulling up on the front edge.
3. Remove old light bulb and replace only with equivalent watt bulb available from parts distributor. Bulbs are also available at most hardware stores or lighting centers. DO NOT USE BULB LARGER THAN 30 WATTS.
4. Replace the microwave oven light cover by carefully pushing into place. Replace the charcoal filter, if used. Push the louver back into place (engaging both the bottom and top tabs) and replace the louver mounting screw.

WORK LIGHT AND NIGHT LIGHT

1. To replace light bulbs, first disconnect power to the microwave oven at the circuit breaker panel or by unplugging.
2. To release cover, remove the screw on the light cover. (See illustration.)
3. Replace light bulbs with equivalent watt bulb available from parts distributor. Bulbs are also available at most hardware stores or lighting centers. DO NOT USE A BULB LARGER THAN 30 WATTS.
4. Close light cover and secure with screw removed in step 2.

CAUTION Light cover may become very hot. Do not touch glass when light is on.

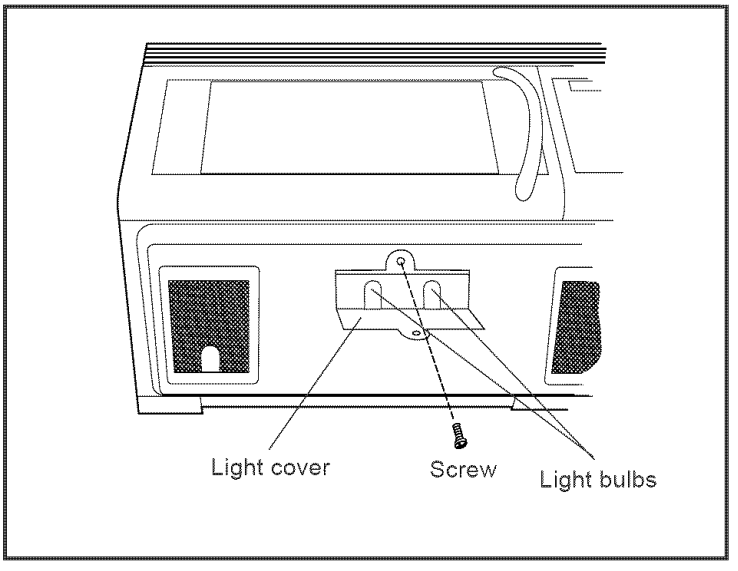

Specifications

CGLMV169, GLMV169, CPLMV169, PLMV169

AC Line Voltage:	UL Rating:	Single phase 120V, 60Hz, AC only
	CUL Rating:	Single phase 120V, 60Hz, AC only
AC Power Required:	UL Rating:	1640W 14.2 amps.
	CUL Rating:	1500W 13.0 amps.
Output Power*:	1000W	
Frequency:	2450 MHz	
Outside Dimensions (not including handle):	29 15/16"(W) x 16 3/8"(H) x 16 15/16"(D)	
Cavity Dimensions:	21"(W) x 8 7/8"(H) x 14 7/16"(D)	
Microwave oven Capacity**:	1.6 Cu.Ft.	
Cooking Uniformity:	Turntable / Stirrer Fan System	
Weight:	Approx. (net) 55 lb, (gross) 60 lb	
Work/Night Light:	2 bulbs 30w max. each (incandescent light bulbs)	

* The International Electrotechnical Commission's standardized method for measuring output wattage. This test method is widely recognized.

** Internal capacity is calculated by measuring maximum width, depth and height. Actual capacity for holding food is less.

In compliance with standards set by:

FCC – Federal Communications Commission Authorized.

DHHS – Complies with Department of Health and Human Services (DHHS) rule, CFR, Title 21, Chapter I, Subchapter J.

NHW – Department of National Health and Welfare of Canada.

– This symbol on the nameplate means the product is listed by Underwriters Laboratories, Inc.

– This symbol on the nameplate means the product is listed by Underwriters Laboratories, Inc. for use in USA or Canada.

These microwave ovens are listed by the Canadian Standard Association as certified (CGLMV169 and CPLMV169).

Service Call Check

Please check the following before calling for service:

Place one cup of water in a glass measuring cup in the microwave oven and close the door securely.
Operate the microwave oven for one minute at HIGH 100%.

A	Does the microwave oven light come on?	YES _____	NO _____
B	Does the cooling fan work? (Put your hand on the louver above the Interactive Display.)	YES _____	NO _____
C	Does the turntable rotate? (It is normal for the turntable to turn in either direction.)	YES _____	NO _____
D	Is the water in the microwave oven warm?	YES _____	NO _____

If "NO" is the answer to any of the above questions, please check electrical outlet, fuse and/or circuit breaker. If they are functioning properly, CONTACT YOUR NEAREST ELECTROLUX AUTHORIZED SERVICER.

A microwave oven should never be serviced by a "do-it-yourself" repair person.

NOTE:

1. If time appearing in the display is counting down very rapidly, check Demonstration Mode on page 17 and cancel.
2. If the oven is set for more than 40 minutes at 80, 90 or 100 percent power level, after the first 40 minutes the power level will automatically adjust itself to 70 percent power to avoid overcooking. (Not Applicable for Models CGLMV169 and CGPLMV169).

LIMITED WARRANTY

Your microwave is protected by this warranty

	WARRANTY PERIOD	THROUGH OUR AUTHORIZED SERVICERS, WE WILL:	THE CONSUMER WILL BE RESPONSIBLE FOR:
FULL ONE-YEAR WARRANTY	One year from original purchase date.	Pay all costs for repairing or replacing any parts of this appliance which prove to be defective in materials or workmanship.	Costs of service calls that are listed under **NORMAL RESPONSIBILITIES OF THE CONSUMER.***
LIMITED 2ND YEAR WARRANTY (Microwave Oven)	Two years from original purchase date.	Repair or replace any part of the microwave oven which proves to be defective in materials or workmanship.	Cost of shipping the replacement part to the nearest authorized servicer; and all labor and service charges.
LIMITED 2nd - 10th YEAR WARRANTY (Magnetron Tube)	Second through tenth years from original purchase date.	Provide a replacement for any magnetron tube which proves to be defective in workmanship or material.	Cost of shipping the replacement part to the nearest authorized servicer; and all labor and service charges.
LIMITED WARRANTY (Applicable to the State of Alaska)	Time periods listed above.	All of the provisions of the full and limited warranties above and the exclusions listed below apply.	Cost of the technician's travel to the home and any costs for pick up and delivery of the appliance required because of service.

In the U.S.A., your appliance is warranted by Electrolux Home Products, Inc. In Canada, your appliance is warranted by Electrolux Canada Corp. We authorize no person to change or to add to any of our obligations under this warranty. Our obligations for service and parts under this warranty must be performed by us or an authorized servicer.

***NORMAL RESPONSIBILITIES OF THE CONSUMER**

This warranty applies only to products in ordinary household use, and the consumer is responsible for the items listed below:

1. Proper use of the appliance in accordance with instructions provided with the product.
2. Proper installation by an authorized servicer in accordance with instructions provided with the appliance and in accordance with all local plumbing, electrical and/or gas codes.
3. Proper connection to a grounded power supply of sufficient voltage, replacement of blown fuses, repair of loose connections or defects in house wiring.
4. Expenses for making the appliance accessible for servicing, such as removal of trim, cupboards, shelves, etc., which are not a part of the appliance when it was shipped from the factory.
5. Damages to finish after installation.
6. Replacement of light bulbs and/or fluorescent tubes (on models with these features).

EXCLUSIONS

This warranty does not cover the following:

1. CONSEQUENTIAL OR INCIDENTAL DAMAGES SUCH AS PROPERTY DAMAGE AND INCIDENTAL EXPENSES RESULTING FROM ANY BREACH OF THIS WRITTEN OR ANY IMPLIED WARRANTY.
   Note: Some states do not allow the exclusion or limitation of incidental or consequential damages, so this limitation or exclusion may not apply to you.
2. Service calls which do not involve malfunction or defects in workmanship or material, or for appliances not in ordinary household use. The consumer shall pay for such service calls.
3. Damages caused by services performed by servicers other than Electrolux Home Products, Inc., Electrolux Canada Corp., or their authorized servicers; use of parts other than genuine Electrolux parts; obtained from persons other than such servicers; or external causes such as abuse, misuse, inadequate power supply or acts of God.
4. Products with original serial numbers that have been removed or altered and cannot be readily determined.

IF YOU NEED SERVICE

Keep your bill of sale, delivery slip, or some other appropriate payment record. The date on the bill establishes the warranty period should service be required. If service is performed, it is in your best interest to obtain and keep all receipts. This written warranty gives you specific legal rights. You may also have other rights that vary from state to state. Service under this warranty must be obtained by contacting Electrolux Home Products, Inc. or Electrolux Canada Corp.

This warranty only applies in the 50 states of the U.S.A., Puerto Rico, and Canada. Product features or specifications as described or illustrated are subject to change without notice. All warranties are made by Electrolux Home Products, Inc. or Electrolux Canada Corp.

2004_02

USA
800•944•9044
Electrolux Home Products, Inc.
P.O. Box 212378
Augusta, GA 30917

Canada
866•294•9911 (English or French)
Electrolux Canada Corp.
6150 McLaughlin Road
Mississauga, Ontario, Canada L5R 4C2