ES-A150204

Hisense

USER MANUAL

Before using the TV, please read this manual thoroughly and retain it for future reference.

English

Copyright Statement

© 2015 Hisense Company Ltd. All Rights Reserved.

All material in this User Manual is the property of Hisense Company Ltd. and its subsidiaries, and is protected under US, CANADA, MEXICO and International copyright and/or other intellectual property laws. Reproduction or transmission of the materials, in whole or in part, in any manner, electronic, print, or otherwise, without the prior written consent of Hisense Company Ltd. is a violation of Hisense Company Ltd. rights under the aforementioned laws.

No part of this publication may be stored, reproduced, transmitted or distributed, in whole or in part, in any manner, electronic or otherwise, whether or not for a charge or other or no consideration, without the prior written permission of Hisense Company Ltd.

Requests for permission to store, reproduce, transmit or distribute materials may be made to one of the following addresses:

USA: Hisense USA Corporation
PO Box 3289
Suwanee, GA 30024

CANADA: Hisense Canada Co., Ltd,
405 Britannia Rd E., Suite 11
Mississauga, Ontario,L4Z 3E6

MEXICO: Hisense Mexico S de RL de CV
Boulevard Miguel de Cervantes Saavedra No. 301, Torre Norte, Piso 2,
Colonia Ampliación Granada, C.P. 11520, en México Distrito Federal.

Hisense, and any and all other Hisense product names, logo's, slogans or marks are registered trademarks of Hisense Company Ltd. and its subsidiaries. All other trademarks are the property of their respective holders

Disclaimer Page

***Notwithstanding anything to the contrary, including in any or all descriptions, representations, statements or other communications related to this Hisense device (hereinafter "Device") made in any form whatsoever and at any time, some or all of the pre-installed, or subsequently installed Application Services may not be available or capable of functioning as intended by the provider of the Application Services in any or all usage areas for reasons outside of Hisense's control, including but not limited to, Internet access, local service limitations, etc. Any purchase or use of the Device, including any Application Services, is purely at the user's risk. Application Services are provided on an as-available basis without warranties of any kind, either expressed or implied, that the Application Service will be uninterrupted or error-free, including but not limited to vagaries of weather, disruption of Service, acts of God, warranties of title, local or regional limitations, no infringement, NOR IMPLIED WARRANTIES OF MERCHANTABILITY OR FITNESS FOR A PARTICULAR PURPOSE. No advice or information given by Hisense, providers, affiliates, or contractors or their respective employees shall create such a warranty. Hisense specifically disclaims responsibility for any or all Application Services from functioning at any time, and by purchasing the Device, you accept such disclaimer without any claim on Hisense. You are solely responsible for providing an active and working connection to the Internet, along with any and all hardware and/or software necessary to use the Hisense Device as intended.*

Table of Contents

Connecting Devices to your TV 3

Connecting an antenna, cable set-top box or satellite receiver 3

Connecting an AV device with a composite video cable 3

Connecting an AV device with a component video cable 4

Connecting an AV device with an HDMI cable 4

Connecting headphones 5

Connecting speakers (or other audio receivers) 5

Connecting a digital sound bar to use ARC (Audio Return Channel) 6

Connecting your TV to a Wired or Wireless Network 7

Connecting to a Wireless network 7

Connecting to an Wired (Ethernet) network 7

Using Your TV Remote Control 9

Completing the First-Time Setup Menu 11

Basic and Advanced TV Settings 13

Accessing the Quick Setup Menu 13

Picture Menu 13

Sound Menu 14

Channel Menu 14

Network Menu 14

System Menu 15

About TV Menu 16

Parental Controls 17

Getting familiar with the Home screen 19

Table of Contents

Live TV **20**
- Viewing channel information 20
- Viewing a channel list 20
- Creating a Favorites list 20
- Viewing your Favorites list 20
- Returning the previous channel 20

VOD **21**
- Netflix 21
- Amazon Instant Video 21
- Youtube and Viewster 21
- Vudu 21
- Dailymotion 21

Media **22**
- File formats that are supported 22
- Viewing videos 22
- Browsing content 22
- Viewing Pictures as a slideshow 22

Apps **23**

Mirroring content from your device to the TV **26**

Software updates for your TV **27**

Quick Problem-solving tips **28**

Connecting Devices to your TV

You have several options for connecting your TV to different devices. The method in which you connect will be based upon the type of cables you have and the available outputs on your device.

Connecting an antenna, cable set-top box or satellite receiver

To connect an antenna,cable set-top box or satellite receiver:

1. Connect one end of a coaxial cable (not included) to the **[RF OUT]** jack on the antenna, cable or satellite box. If you are using an antenna with twin-lead cable, you may need a 300-75 Ohm adapter (not provided) to connect it to the back of your TV. Likewise, if you are using several antennas, you may need a combiner (not provided).
2. Connect the other end of the cable to the **[ANT/CABLE]** jack on the side of TV.
3. Using your remote, press the [**INPUT**] button and select TV as the input source.

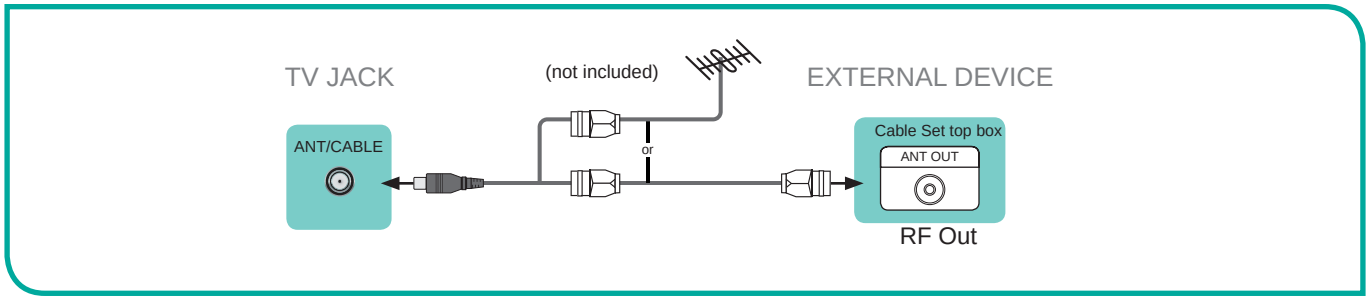

Figure 7. Antenna, cable set-top box or satellite receiver to the TV

Connecting a Satellite Receiver, DVD player (or other Audio Visual (AV) device with a composite video cable (yellow/red/white)

To connect an AV device with a composite video cable (not provided):

1. Use the audio and video cables to connect the composite video/audio jacks (of the external AV device) to the [**AV IN**] jacks of the TV. (Video = yellow, Audio Left = white, and Audio Right = red).
2. Plug the connected devices into the AV connectors on the TV before switching it on.
3. Using your remote, press the **[INPUT]** button and select **AV** as the input source.

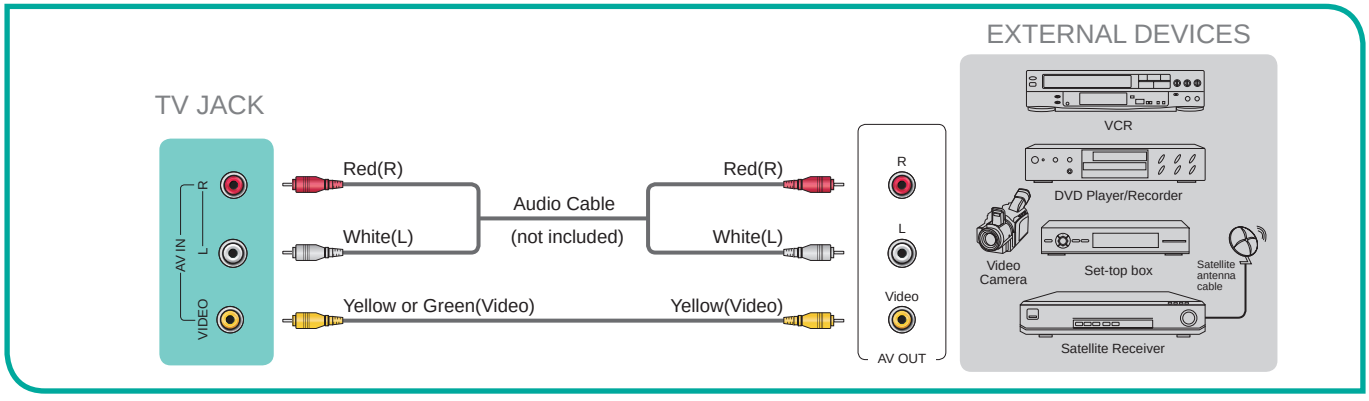

Figure 8. AV device with a composite video cable

Connecting an AV device with a component video cable (red/blue/green)

To connect an AV device with a component cable (which is red/blue/green):

1. Use a component video cable (not provided) to connect the component output jacks of the external device to the **YP_BP_R** jacks for the TV. Use an audio cable to connect the component audio jacks of the external device to the TV AUDIO (L/R) jacks.
2. Plug the connected devices into the YP_BP_R and L/R ports on the TV before switching it on.
3. Using your remote, press the [**INPUT**] button and select **Component** as the input source.

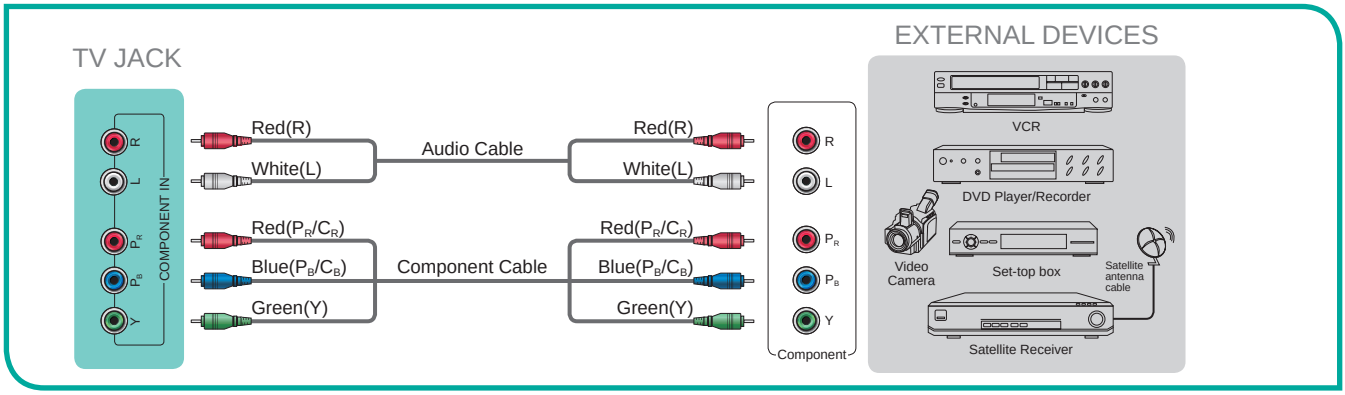

Figure 9. AV device with a component video cable

NOTE

One AV device can be connected to the TV using a component video or composite video cable.

Connecting an AV device with an HDMI cable

This 4K TV has two different software versions of HDMI ports to connect HDMI-enabled devices. The two high-powered HDMI version 2.0(HDMI 3, HDMI 4) inputs enable you to connect 4K Ultra-HD external devices that require more bandwidth to transmit to the TV screen. For example, if you have an X-box or Blu-ray player that supports the 2.0 standard. The two HDMI version 1.4 inputs are great for any of your external devices that support a standard full high-definition resolution of 1080p.

Please refer to the User Manual that came with your device for step-by-step instructions.

To connect an AV device with an HDMI cable:

1. Use an HDMI cable to connect the **[HDMI]** output port of the AV device to the **[HDMI]** jack of the TV.
2. Plug the connected devices into the power socket.
3. Using your remote, press the **[INPUT]** button and select the corresponding HDMI input.

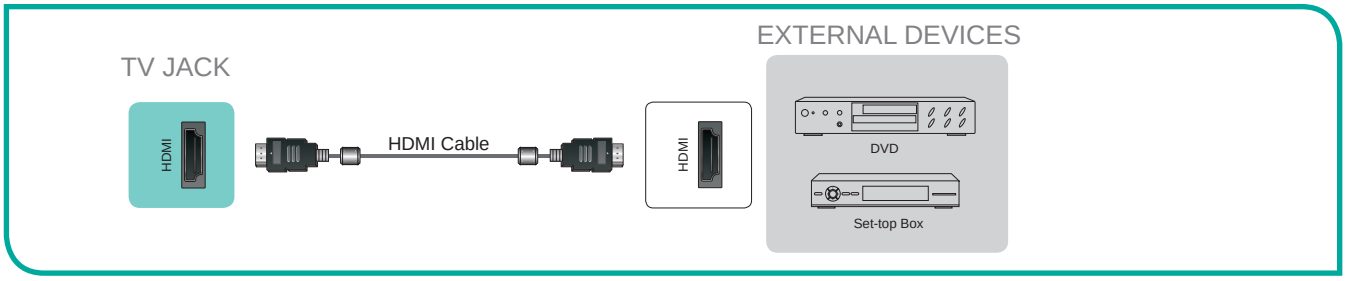

Figure 10. AV device with an HDMI cable

NOTES

- Because the HDMI connector provides video and audio signals, it is not necessary to connect an audio cable.
- The HDMI cable will not supplied with the product.
- We strongly recommend to use HDMI Cable with 2 cores as shown in the figure.

Connecting an MHL-enabled device

You can connect an MHL-enabled device, such as a cell phone, and view the screen of your device on the TV.

1. Connect one end of an HDMI-to-MHL cable to the micro USB port on the device.
2. Connect the other end of the cable to the HDMI / MHL jack.
3. Select the corresponding source from the TV.

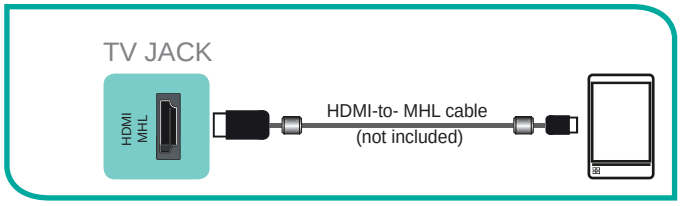

Figure 11. MHL-enabled device to the TV

NOTES

- This feature may be unavailable on some TV series.
- The MHL cable will not supplied with the product.
- We strongly recommend to use MHL Cable with 2 core as shown in the figure.

Connecting headphones

You can connect headphones to the **[AUDIO OUT]** port on your TV. While the headphone is connected, the sound from the built-in speakers will be disabled.

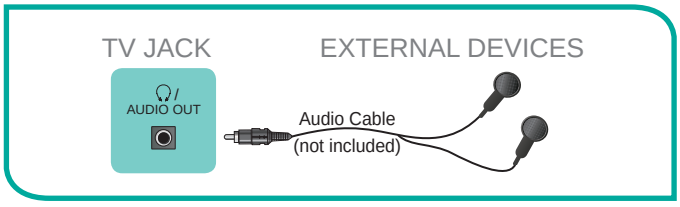

Figure 12. Headphones to the TV

Connecting speakers (or other audio receivers)

To connect speakers (or other audio receivers) with an audio cable:

1. Use an audio cable (not provided) to connect the [**DIGITAL AUDIO IN**] jack of the audio receiver device to the [**DIGITAL AUDIO OUT**] jack of the TV. Another option is to use an RCA Y-cable (1/8”-stereo mini to L/R phono) to connect an analog sound system to the [**AUDIO OUT**] jack of the TV.
2. Plug the connected devices into the main power socket before switching on the TV.

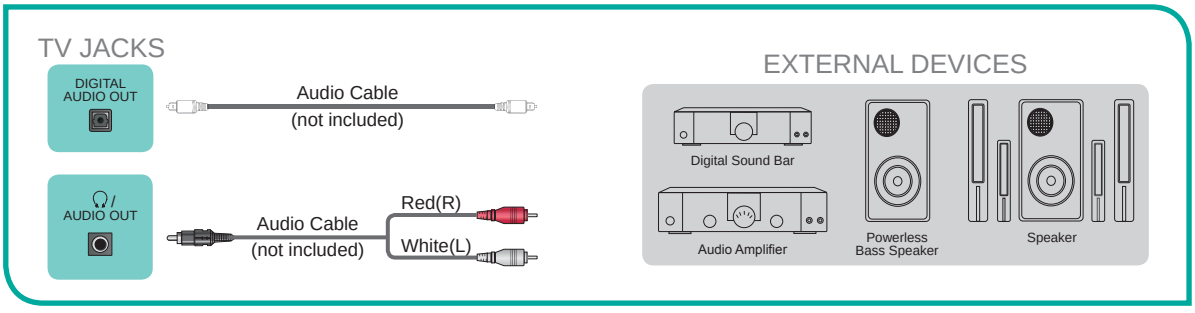

Figure 13. Audio receiver with audio cable

NOTE

If you prefer to use Audio Return Channel, then follow the steps on the next page under 'Connecting a digital sound bar to use Audio Return Channel'.

NOTES

- When a digital audio system is connected to the [**DIGITAL AUDIO OUT**] jack, decrease the TV and system volume.
- 5.1 CH (channel) audio is available when the TV is connected to an external device that supports a 5.1 channel surround sound
- You can receive 5.1 channel audio in one of two ways. The first way is to connect the [**DIGITAL AUDIO OUT**] jack from the device to the Amplifier. The second way is to connect the [**DIGITAL AUDIO OUT**] jack on the back of the TV to the [**Optical**] port on the Amplifier.After you've completed one of the two methods then be sure to go into the Advanced Audio Settings of the TV and select RAW to receive the 5.1 channel audio. You will need to also go into the sound or audio settings of your device to ensure it is set to 5.1 Channel output. It may read 'Bitstream', 'RAW' or 'Digital'.

Connecting a digital sound bar to use Audio Return Channel (ARC)

If you'd like to use the Audio Return Channel (ARC) feature to have sound sent from the TV back down an HDMI cable to a digital soundbar, then you will need to connect the cable to the [**HDMI / ARC**] port. By using this feature, you will also be able to control the soundbar with your TV remote instead of having to use multiple remotes for each device.

NOTE

Only digital sound bars that require a wired connection are compatible with the H7 Series Smart TV.

To connect a digital sound bar with an HDMI cable:

1. Connect the cable that's attached to the soundbar to the [**HDMI / ARC**] port on the TV.
2. Turn on the soundbar by pressing the Power button.
3. Press the **Quick Setup menu** button on your remote and press the right arrow on the [**D-pad**] of your remote to show the full menu settings and go to **System > HDMI Function**.
4. Turn on the **CEC&MHL Control** setting.
5. Press the **Quick Setup menu** button on your remote and press the right arrow on the [**D-pad**] of your remote to show the full menu settings.
6. Select **Sound > Advance Audio Settings**
7. Go to the section of the screen that reads **TV Speaker & ARC** and select **ARC First**.

   NOTE: If the device has an **Input** Selector feature then make sure to change it to **TV**.

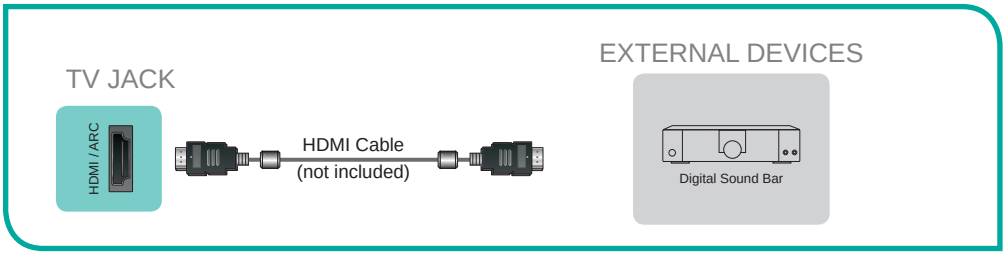

Figure 14. Digital Sound Bar to the HDMI / ARC port

Connecting Your TV to a Wired or Wireless Network

You have the option to connect your TV to a wireless or wired network to access the Internet.

Connecting to a Wireless Network

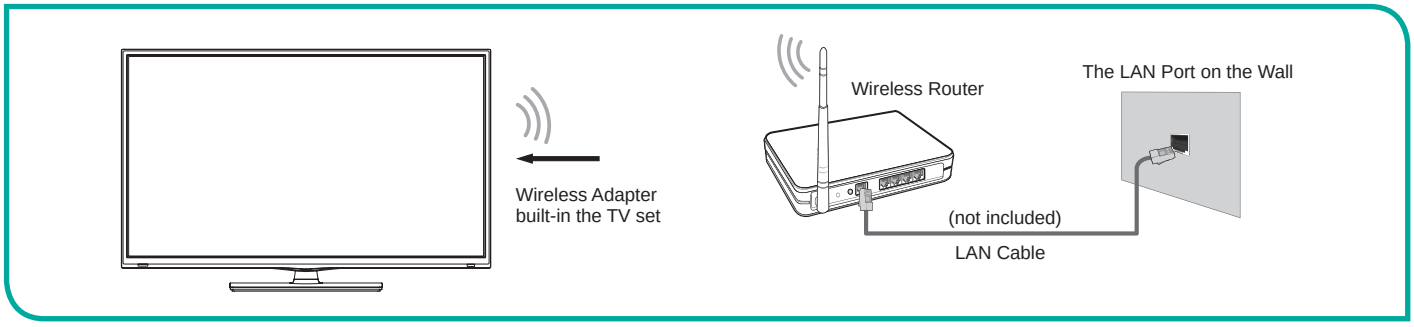

Figure 15. Connect the TV to a wireless network

Our built-in wireless LAN adapter supports the IEEE 802.11 ac/b/g/n communication protocols and we recommend that you use an IEEE 802.11n or IEEE 802.11ac router. When you play a video over an IEEE 802.11 b/g connection, the video may not play smoothly.

NOTES

- You must use the Hisense built-in Wireless LAN Adapter to use a wireless network because the set does not support an external USB network adapter.
- To use a wireless network, your TV must be connected to a wireless IP sharer. If the wireless IP sharer supports Dynamic Host Configuration Protocol (DHCP), your TV can use a DHCP or static IP address to connect to the wireless network.
- Select a channel for the wireless IP sharer that is not currently being used. If the channel set for the wireless IP sharer is currently being used by another device nearby, this will result in interference and communication failure.
- If you apply a security system other than the systems listed below, it will not work with the TV.
- If Pure High-throughput (Greenfield) 802.11N mode is selected and the Encryption type is set to WEP, TKIP or TKIP-AES (WPS2 Mixed) for your Access Point (AP), then the Hisense TV will not support a connection in compliance with these Wi-Fi certification specifications.
- If your access point (AP) supports Wi-Fi Protected Setup (WPS), you can connect to the network via Push Button Configuration (PBC) or PIN (Personal Identification Number). WPS will automatically configure the SSID and WPA key in either mode.

Connecting to a Wired (Ethernet) Network

You can attach your TV to your LAN in one of the three following ways:
Option 1.

- You can attach your TV to your LAN by connecting the LAN port on the back of your TV to an external modem using a Cat 5 LAN cable. See Figure 16.

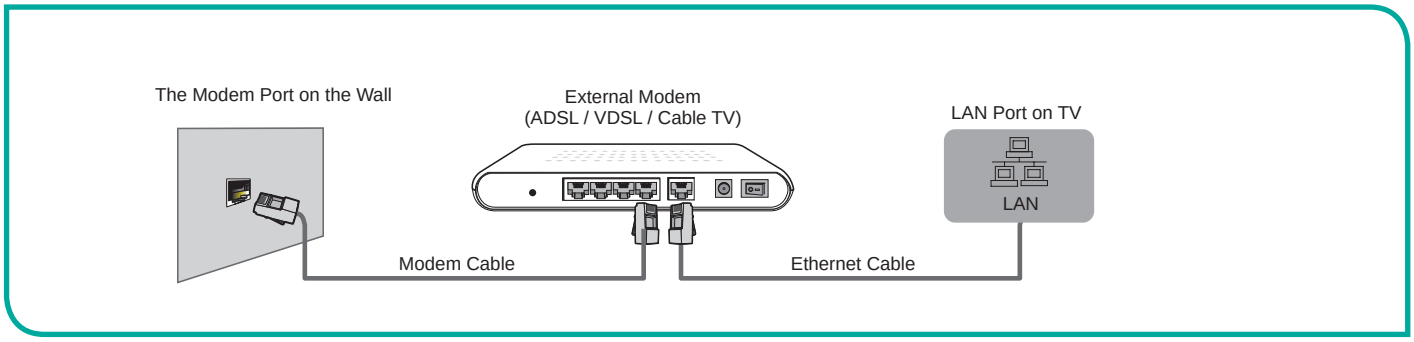

Figure 16. Connect a LAN port on the TV to an external modem

Option 2

- You can attach your TV to your LAN by connecting the [**LAN**] port on the back of your TV to an IP Sharer which is connected to an external modem. Use an Ethernet cable for the connection. See figure 17.

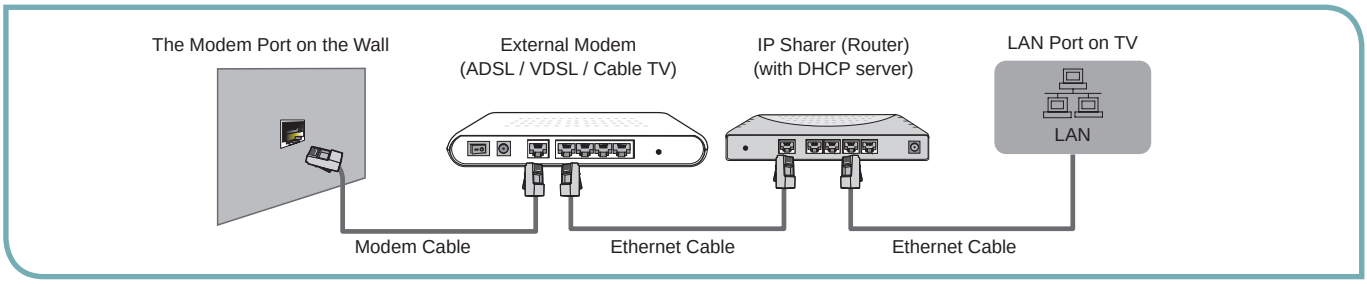

Figure 17. Connect a LAN port on the TV to an IP sharer

Option 3

- Depending on how your network is configured, you may be able to attach your TV to your LAN by connecting the [**LAN**] port on the back of your TV directly to a network wall outlet with an Ethernet cable. See the diagram below.

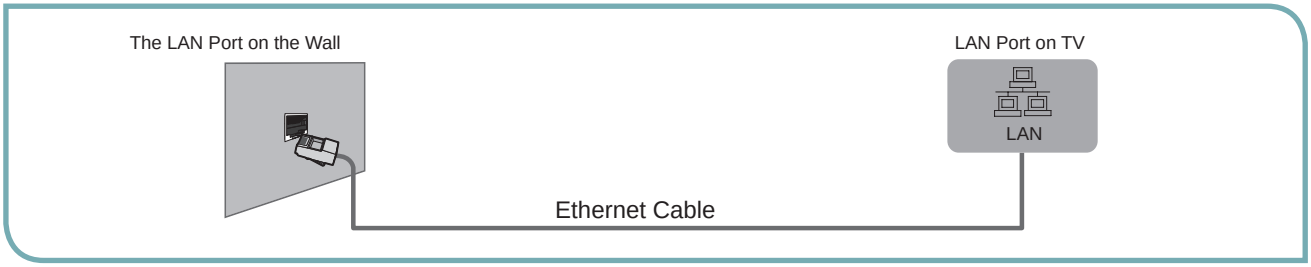

Figure 18. Connect a LAN port on the TV to a network wall outlet

If you have a Dynamic Network, you should use an ADSL modem or router that supports Dynamic Host Configuration Protocol (DHCP). Modems and routers that support DHCP automatically provide the IP address, subnet mask, gateway, and DNS, so you don't have to enter them manually. Most home networks are Dynamic Networks.

Some networks require a Static IP address. If your network requires a Static IP address, you must enter the IP address, subnet mask, gateway, and DNS values manually on your TV's Cable Setup Screen when you set up the network connection. To get the IP address, subnet mask, gateway and DNS values, contact your Internet Service Provider (ISP).

NOTE

You can use ADSL modems that support DHCP if your network requires a static IP address. ADSL modems that support DHCP also let you use static IP addresses.

Buttons on your TV remote

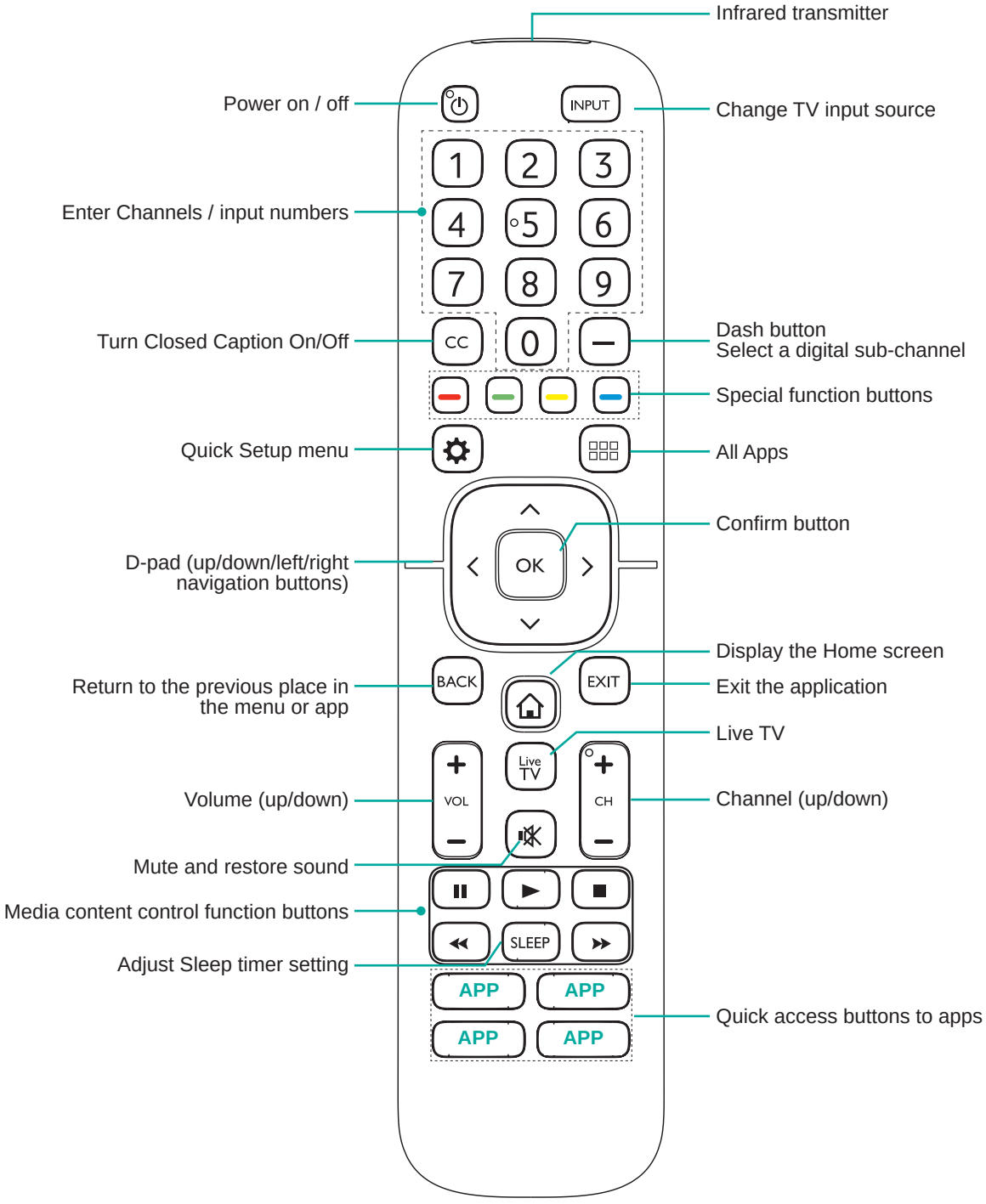

Begin using your remote

1. Slide the back cover to open the battery compartment of the remote control.

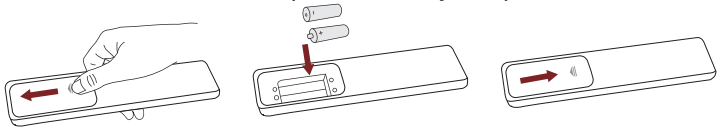

Gently push and slide Insert the batteries Gently push and slide

2. Insert two AAA size batteries. Make sure to match the (+) and (-) ends of the batteries with the (+) and (-) ends indicated in the battery compartment.
3. Replace the battery compartment cover.

Important Information about the remote and batteries:

- **Discard batteries in a designated disposal area. Do not throw them into a fire.**
- **Remove old batteries immediately to prevent them from leaking into the battery compartment.**
- **If you do not intend to use the remote control for a long time, remove the batteries.**
- **Battery chemicals can cause a rash. If the batteries leak, clean the battery compartment with a cloth. If chemicals touch your skin then wash it immediately.**
- **Do not mix old and new batteries.**
- **Do not mix alkaline, standard (carbon-zinc) or rechargeable (NiCd, NiMH, etc.) batteries.**
- **Do not continue using the remote if it gets warm or hot.**

  Call our Support Center immediately on the Hisense support website.

Remote Control Range Information

- The remote control can work at a distance of up to 26 feet in front of the TV set.
- It can work at a 30 degree horizontal or vertical angle.

Program Your Universal Cable or Satellite Remote Control to Operate Your New Hisense Television (only for USA)

If you would like to program your other household remote controls to your new Hisense television,please refer to the User's Manual supplied by your Cable or Satellite provider. The Cable or Satellite providers' User's Manuals should include instructions on how to program their remote to your television.

A list of Hisense codes for the most common Cable and Satellite providers are listed below. Use the Hisense code that is associated with your Cable or Satellite provider (if applicable).

DIRECTV.....0178, 10178, 10019, 10748, 11314, 11660, 11710, 11780, 12049, 10171, 11204, 11326, 11517, 11564, 11641, 11963, 12002, 12183
Time Warner Cable.....386, 0178, 10178, 400, 450, 461, 456, 0748, 1463, 0463, 10463
Comcast.....0178, 10178, 10463, 11463, 10748, 11314, 11660, 10171, 11204, 11326, 11517, 11641, 11780, 11785, 11892, 11963, 12002
Cox Communications.....0178, 10178, 1326, 1463
Dish Network.....505, 627, 538, 720, 659
If the Hisense code associated with your Cable or Satellite provider is not listed, does not work or you cannot locate the instructions to program your remote, call your local Cable or Satellite provider’s customer service center.

If your Cable or Satellite provider does not have a Hisense code available, please contact us.

Using Your Cable Set-top Box or Satellite Receiver Remote as a ‘Universal’ Remote

If you prefer to use your Cable Set-top Box or Satellite Receiver Remote as a ‘Universal Remote’, then visit the Support page to view a list of the codes.

Now that you have attached the TV stand and connected your external devices, it's time to complete the first-time setup menu.

Completing the First-Time Setup Menu

Press the [**Power**] button on the remote to turn on the TV.

A splash screen that shows the Hisense logo appears. Next, the First-Time Setup Menu begins by prompting you to choose your **Language, Country,** and **Time Zone.** After the splash screen that displays the Hisense logo appears, begin the first-time setup menu.

Screen	Task
Language and Location 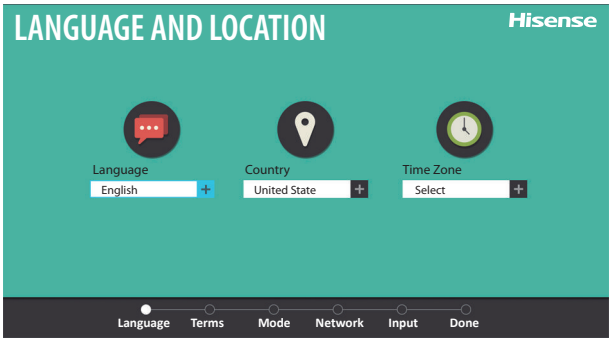 	1. Using the D-pad arrows of your remote, choose your **Language, Country** and **Time Zone**. 2. Next, navigate to the Forward arrow and press [**OK**]**.** **TIP:** The edge of the drop-down boxes and the back and forward arrows change to blue when you select them.
Terms of Service 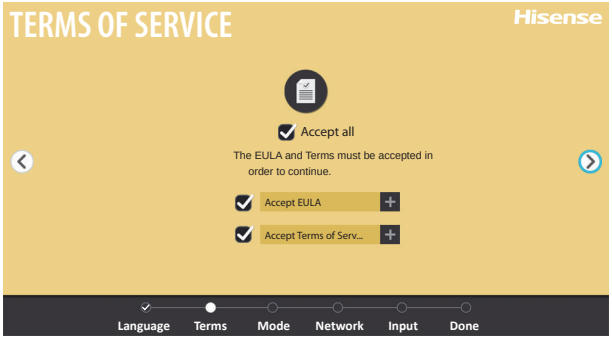 	1. Press [**OK**] on your remote to select **Accept All**. 2. When you're done, then navigate to the Forward arrow and press [**OK**].
TV Usage Mode 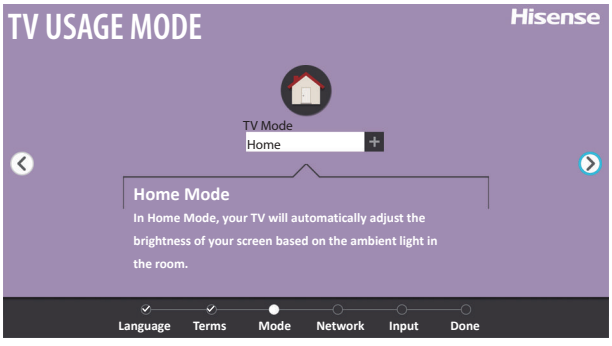 	Select **Home** (which appears by default) and then navigate to the Forward arrow to press [**OK**]. **Note:** 'Store mode' should only be selected by Retailers who plan to demonstrate the TV.

Disclaimer: ***Images throughout this document are for illustrative purposes only and may differ from the actual product.***

First-time Setup Menu (continued)

Screen	Task
Network Connection 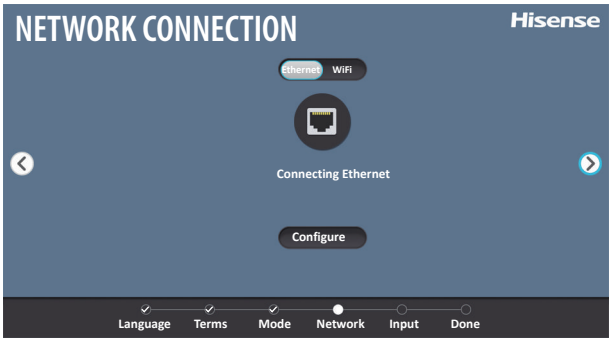 	If your TV does not automatically detect an Ethernet connection, then select **Wi-Fi.** When you're done, select your network from the list that displays and move to the next screen.
TV Input Source 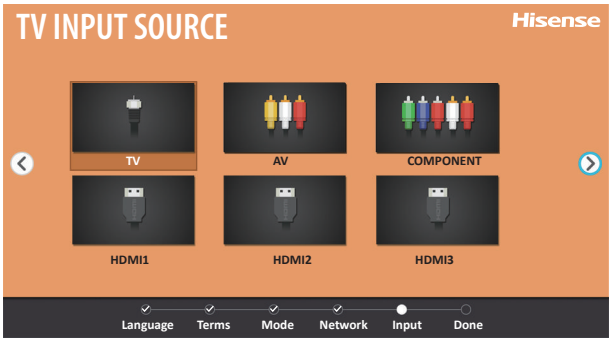 	Select how you receive your TV channels. Choose from one of the following sources below and then move to the next screen. • TV • AV • Component • HDMI **NOTE:** If you use an antenna to receive channels, then you must complete the first-time setup menu in order to run a channel scan.

Congratulations! Your TV is now ready to use.

Press [**OK**] on your remote if you are fine with the selections that appear on the screen. Otherwise, navigate to the back arrow on the screen to change your selection.

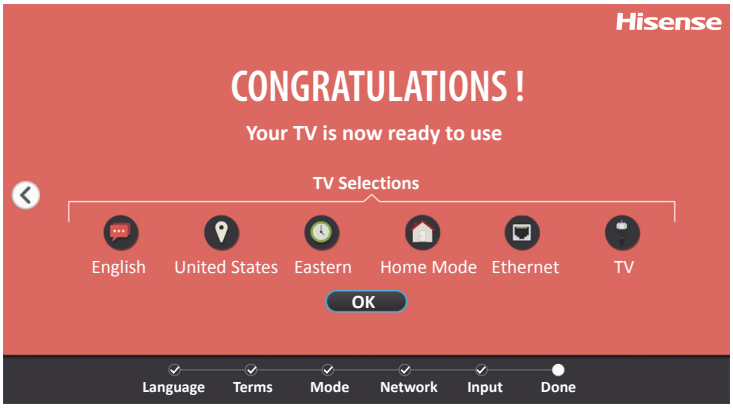

Your Hisense TV comes with many TV setting features to allow you to customize the picture based on your viewing preference and environment. As you navigate throughout different screens to access settings, some of the indicators appear as words ‘On’ and ‘Off’ and some are open [o] and closed [I] symbols. An [o] indicator signifies a feature that is disabled.

Accessing the Quick Setup Menu

You can press the [**Quick Setup**] menu button [⚙] and press the right arrow on the D-pad to view the full menu settings.

The **Quick Setup** menu consists of the following settings:

- **Picture**
- **Sound**
- **Channel**
- **Network**
- **System**
- **About TV**

Picture Menu

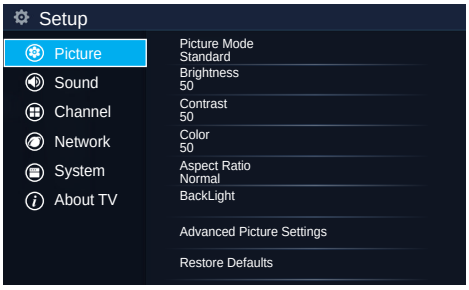

If you’d like to configure the settings for your picture, then there are six types of picture modes available: **Vivid, Standard, Theater, Energy Saving, Game and Sport**.

Once you choose the mode, you can adjust the picture based on the following settings:

- **Brightness:** Adjust the Brightness level to generate lighter or darker images.
- **Contrast:** Adjust the Contrast level to increase or decrease how bright images appear.
- **Color:** Adjust the color intensity of the picture for a more vibrant image.
- **Aspect Ratio:** Adjust the Aspect Ratio to stretch or zoom in on your picture. You can choose from the following settings: **Auto, Direct, Panoramic, Cinema, Wide, Zoom or Normal**.
- **Backlight:** This TV has a **Dynamic Backlight Control** setting that you can turn ‘On’ and set to high or low. The Backlight setting enables you to adjust how bright you want images to appear. In addition, an **Eco Sensor** setting is available that will enable the TV to automatically adjust the picture settings according to the amount of ambient light in your room. This is a money-saving feature because it reduces power consumption.
- **Advanced Picture Settings:** Adjust advanced picture settings based on your viewing preference.
  - **Display:** Adjust advanced picture settings in the component source.
  - **OverScan:** Disable the overscan for PC inputs to fully display all menu items at the edges of the screen.
  - **Tint:** Adjust the colors from a green to magenta tint to view the natural skin tones of people on the screen.
  - **Sharpness:** Adjust how sharp or soft edges of images appear.
  - **Ultra Smooth Motion:** This setting removes motion judder. You can adjust it from high, medium or low. A high setting will produce a smoother picture whereas a low setting will result in a picture that has less judder (shaking).
  - **Noise Reduction:** Improve how clear the picture appears by reducing noise.
  - **Adaptive Contrast:** Automatically darken dark areas and lighten light areas of images to see more details.
  - **Color Temperature:** Select a preset color temperature.
  - **White Balance:** Adjust the intensity of red, green and blue lights to view the true colors of all images in the picture.
  - **Color Tuner:** Adjust the Hue, Saturation and Brightness of color settings.
- **Restore Defaults :** Restore all the picture settings in the current picture mode to the factory default values.

Sound Menu

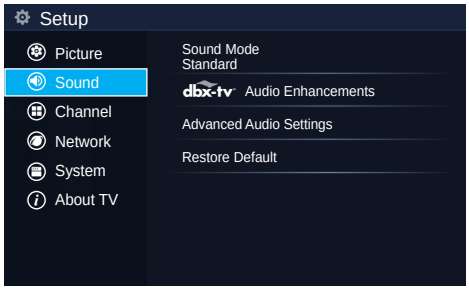

- **Sound Mode:** Select a preset sound mode to suit the type of content you are listening to: **Standard**, **Theater**, **Music** , **Speech** and **Late Night**.

Set the sound effects to suit your preference:

Configure your audio settings for your sound preferences. Once you choose the mode, you can adjust the audio based on the following settings:

- dbx-tv **Audio Enhancements:** dbx-tv's Total Technology delivers the best possible TV sound for your TV.
- Total Sonics **Total Sonics:** Optimizes overall sound quality by increasing bass, making dialog clear and natural, and widening the sound field.
  - Total Surround **Total Surround:** Provides surround sound experience with psycho-acoustic processing to place sounds beside, behind, and above the viewer. For best results use with Total Sonics.
  - Total Volume **Total Volume:** Maintains consistent loudness levels from wide dynamic range programs, too-loud commercials, and channel or input changes.
- **Advanced Audio Settings:** Tune the audio settings and quality of the TV.
  - **Equalizer:** Boost the volume at different frequencies.
  - **Lip Sync:** Synchronize the displayed image with the audio output.
  - **Balance:** Adjust the left and right speaker strength to optimize audio for a specific location.
  - **Digital Audio Out:** Select the digital audio output format that best suits the audio device type. For example, choose RAW (which is uncompressed audio in RAW form) if you have 5.1 Channel Surround Sound Speaker set up. Choose PCM if you have an amplifier that does not support Dolby Digital technology.
  - **Digital Audio Delay:** Adjust the digital audio output delay time to sync sound from an external speaker with the images on the TV.
  - **TV Speaker & ARC:** Select the TV speaker or an external speaker for sound output.
  - **Audio Out:** Change the way audio is sent through the type of device that's connected to your TV Audio Out port.
- **Restore Defaults :** Restore all of the audio settings in current audio mode to the factory default values.

Channel Menu

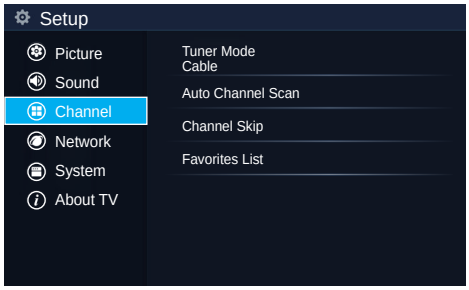

- **Tuner Mode:** Select Tuner Mode if you receive TV channels over the air (antenna) or directly through a cable connection without using a set top box. The input will be used during a channel scan.
- **Auto Channel Scan:** Automatically scan for channels to view programming from your TV source.
- **Channel Skip:** Skip a channel that your TV picked up during a previous channel scan search.
- **Favorites List:** Quickly access your most-watched channels by creating a Favorites list.

Network Menu

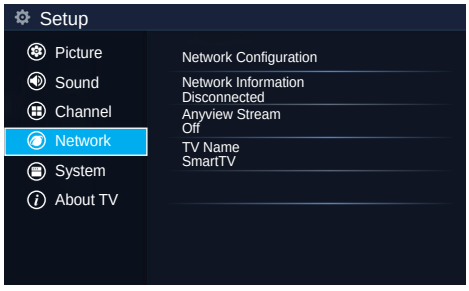

- **Network Configuration:** Set up the network to gain full access of Smart TV features.
  - **Internet Connection:** Turn the Internet connection On or Off.
  - **Connection Type:** Choose between a wired or wireless network connection to access the Internet.
  - **Wireless Settings:** Configure the advanced wireless network settings for the TV.
  - **IP Setting:** Configure the IP setting for your network connection.
  - **Connection Test:** Start a network connection test.

- **Network Information:** View information about your network connection.
- **Anyview Stream:** Share video, music or other content files from another device to your TV screen.
- **TV Name:** Choose a name for your TV. The name will be shown to devices that are available for sharing data.

System Menu

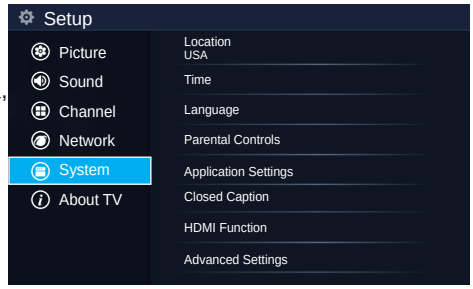

- **Location:** Choose the location from where you will watch your TV.
- **Time:** Set the current time based on your location.
  - **Time Zone:** Select your time zone: Eastern, Indiana, Central, Mountain, Arizona, Pacific, Alaska and Hawaii.
  - **Time Format:** Set the time to display in a 12 or 24-hour format.
  - **Date/Time:** Set the Date and Time.
  - **Daylight Savings:** Select whether to apply Daylight Savings Time to the TV.
  - **Power On Timer:** Enable the Power On Timer to Off, Once or Daily.
  - **Power Off Timer:** Enable the Sleep Timer to Off, Once or Daily.
  - **Sleep Timer:** Set the sleep timer to automatically turn the TV Off within a specified time: Off, 10 Minutes, 20 Minutes, 30 Minutes, 40 Minutes, 50 Minutes, 60 Minutes, 90 Minutes and 120 Minutes.
- **Language:** Adjust the default language settings for the TV.
- **Parental Controls:** Turn On Parental Controls to block children from being able to view certain programs. The default password is 0000.
  - **Locks:** Enable or disables all locks. All selected locks can be turned off for parental viewing and easily turned on again.
  - **Block Time:** Block certain channels and programs during certain periods of time.
  - **Channel Block:** Block programs by channels when you turn On the Parental Controls feature.
  - **Program Block:** Blocks programs according to their TV or MPAA (movie) rating when you have turned on the Parental Controls feature and selected that rating to be blocked.
  - **Input Block :** Block content from devices that are connected to certain TV ports.
  - **Change PIN:** Change your PIN that you use to access Parental Controls. If you want to change your parental control password, first enter the new password then enter the same password again.

NOTE

If you forget your password, call the **Hisense Consumer Electronics Care Center** or reset your TV back to the factory settings.

  - **Restore Parental Control Defaults:** Restore Parental Control back to the factory default setting.
- **Application Settings:** Set settings for apps on your TV.
  - **Netflix :** Remove this TV from your Netflix account. Please contact Netflix if you want to stop being billed for you service.
  - **ESN :** Display the Netflix Electronic Serial Number.
  - **VUDU :** Remove this TV from your VUDU account. Please contact VUDU if you want to stop being billed for you service.
- **Closed Caption:** Adjust Closed Captioning settings.
  - **Analog Caption:** Select an Analog Caption setting from Off, CC1-CC4, Text 1-TEXT4.

CC1-CC4: Closed captioning appears in a small banner across the bottom of the screen. CC1 is usually the “printed” version of the audio.

CC2-CC4 display content are provided by the broadcaster.Text1-Text4: Closed

captioning that covers half or all of the screen. Text1-Text4 display content are provided by the broadcaster.

Off: To turn off the Analog Caption.

- **Digital Caption:** Select a Digital Caption setting: Off,CS1-CS6.
- **Digital CC Settings:** There are two caption styles. One is the automatic function set as the broadcaster, while the other is the custom style where you can adjust the Style, Size, Font, Text Color, Text Opacity, Background Color etc.

HDMI Function : Configure how to control CEC-enabled devices with your TV remote.

- **CEC & MHL Control:** Allow HDMI devices to control each other.
- **Device Auto Power Off:** Automatically turn off HDMI CEC devices when the TV is turned off .
- **TV Auto Power On:** Allow the TV to turn On with CEC-enabled devices.
- **Device Connect:** Allow CEC-enabled devices to communicate with each other when connected through an HDMI cable.
- **CEC Device Lists:** View a list of all CEC-enabled devices.

NOTE

HDMI cables must be used to connect HDMI CEC-compatible devices to your TV.

The HDMI CEC feature of the connected device must be turned on.

If you connect an HDMI device that is not HDMI CEC-compatible, all the HDMI-CEC Control features do not work.

Depending on the connected HDMI device, the HDMI-CEC Control feature may not work.

Advanced Settings: Access the Advanced Settings menu.

- **Menu Timeout :** Set the amount of time that you'd like for the menu to display : 10s, 20s , 30s , 60s or Off.
- **Use Mode:** Set the TV to use in Home or Store Mode.
- **Input Labels:** Edit the input labels.
- **Default LiveTV Source:** Select the default input selected by the remote control Live TV button.
- **Setup Wizard:** Use the Setup Wizard for instructions to help you set up your TV.
- **Power Indicator:** Set the Power Indicator light to stay On or Off when watching TV.

About TV Menu

About TV

- **System Information:** View system information.
- **Hisense Legal Disclaimer:** Read the Hisense Legal Disclaimer.
- **Auto Firmware Upgrade:** Set your TV to automatically receive the latest firmware.
- **Check Firmware Upgrade:** Check to ensure that your TV has received the latest firmware.
- **Restore To Factory Default:** Restore your TV back to the factory default.

Parental Controls

The **Parental Controls** setting allows you to block content that is not appropriate for children to watch. You can do this by creating a 4-digit passcode. The factory-default passcode is 0000.

Turning Parental Controls 'On'

To access **Parental Controls**:

1. Press the [**Quick Setup**] menu button on your remote.
2. Press the right arrow button to display the full menu settings.
3. Select **System > Parental Controls**.
4. Press [**OK**] on your remote.

An **Enter PIN** window displays.

Using the numerical keypad on your remote, enter the factory-default passcode 0000 and press [**OK**].

Press the right arrow button on the D-pad to turn the locks 'On'.

You will see the other Parental Control settings change from a greyed out state and become highlighted. When this occurs, begin adding other settings to the Block Time, Channel Block, Program Block, Input Block, Change PIN or Restore Parental Control Defaults features.

NOTE

All ratings that are higher than those you select are also blocked. For example, if you choose to block the PG-13 rating, then the higher ratings (R and NC-17) are automatically blocked too.

Channel Block

Block programs by channels when you turn on the **Parental Controls** feature.

Block Time

Choose a time of day that you'd like to start blocking certain programs.

Program Block

Block programs according to their TV or MPAA (movie) rating when you have turned on the Parental Controls feature and selected that rating to be blocked.

Input Block

Block content from devices that are connected to certain TV ports.

Change PIN

Change your PIN that you use to access Parental Controls.

Restore Parental Control defaults

Restore Parental Controls back to the factory setting.

Description of U.S. TV Ratings

Content	Defined as
FV	Fantasy Violence
D	Suggestive dialog
L	Course or crude language
S	Sexual situations
V	Violence

Description of Age-based Ratings

TV-Y	All children
TV-Y7	Directed to older children
TV-G	General audience
TV-PG	Parental Guidance Suggested
TV-14	Parents strongly cautioned
TV-MA	Mature Audiences Only

U.S. Movie Ratings

Rating	Defined as
G	General audience
PG	Parental Guidance suggested
PG-13	Parents strongly cautioned
R	Restricted
NC-17	No one 17 and under permitted
X	A rating that has now been superseded by NC-17

Canadian English Ratings

Rating	Defined as
C	Children
C8+	Children 8 years and older
G	General programming that is suitable for all audiences
PG	Parental Guidance
14+	Viewers 14 years and older
18+	Adult Programming

Canadian French Ratings

Rating	Defined as
G	General (appropriate for all ages and must contain little to no violence or sexual content)
8ans+	General but inadvisable for young children(could contain scenes disturbing to children under eight). Recommended for viewing with parent.
13ans+	Programming is appropriate for children 13 and older and may contain moderate violence, language and some sexual situations.
16ans+	Recommended for children 16 and older and may contain strong violence, language and sexual content.
18ans+	Programming intended for viewers that are 18 and older. Programming may contain extreme violence and graphic sexual content/pornography.

NOTE

If you forget your passcode, call the **Hisense Consumer Electronics Care Center** or choose **Restore Parental Control defaults** from the **Parental Controls** settings menu.

Getting familiar with the Home screen

The simple design of the **Home** screen menu makes it easy to navigate. It serves as the central location to access **Live TV**, **VOD, Media** or **Apps** and inputs on the back of the TV that you've connected external devices to.

To access the **Home** screen, press the **[Home]** button on your remote control and use the arrows on the D-pad to make your selection.

Indicators and Icons on the top of the Home screen

You can always view the current time in the top right corner of the **Home** screen.

If your TV is connected to the Internet through a wireless connection, then an icon will display in the top right corner of the screen. This location makes it very convenient for you to determine if you still have Internet connectivity as you use the TV.

In addition, if you have connected a device (such as a thumb drive) to a USB port and your TV recognizes it, then a device icon will also display in the same area.

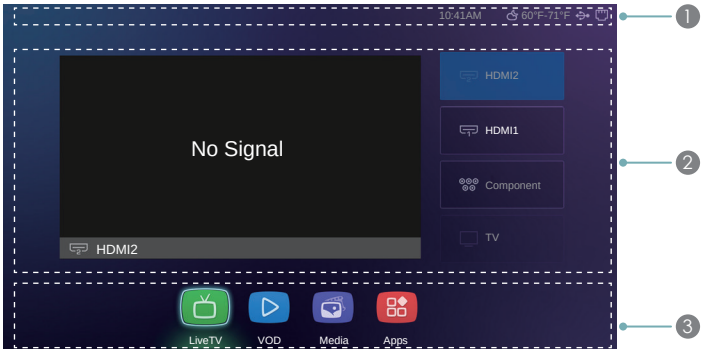

Figure 19. Home screen

Names of icon images that appear on the side of the Home screen

The following icon names represent the inputs on the back of the TV:

- **TV**
- **AV**
- **Component**
- **HDMI 1**
- **HDMI 2**
- **HDMI 3**
- **HDMI 4**

Each time you access the **Home** screen, the icons for your inputs will display on the right side of the screen. Inputs that you have connected an external device to will be highlighted. Inputs that do not have an external device connected to are greyed out.

Names of icon images that appear on the bottom of the Home screen

The bottom of the **Home** screen displays the following icon names:

- Live TV
- VOD
- Media
- Apps

LiveTV

To view broadcast programs, select the **Live TV** icon on the screen or press the [**Live TV**] button on your remote.

Viewing Channel information

As you use the [**Channel**] button on your remote to scroll through channels, an information banner appears on the top of the screen.

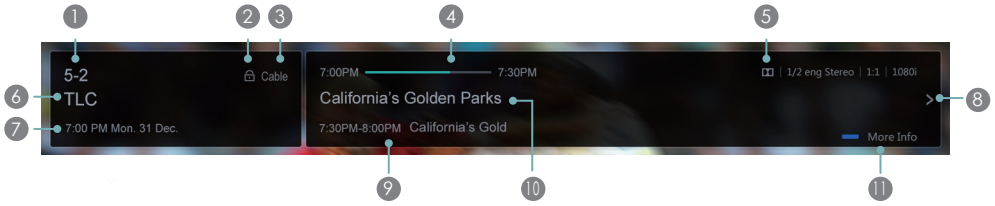

Figure 20. Information banner

The information banner displays the following information:

- Channel number (1)
- Lock status (2)
- Input (3)
- Start/Stop time progress bar of the current program (4)
- Show identification (5)
- Television Network identifier (6)
- Current date and time (7)
- Prompt (8)
- Beginning and end time of the next program (9)
- Program name (10)
- More info (11)

If you are watching a particular channel, you can also press the up arrow on the [**D-pad**] of your remote to view channel information.

Viewing a channel list

After you have done an automatic channel scan (if you're using an Antenna) or are receiving your channels through a cable provider, you can view your list of channels by pressing [**OK]** on your remote.

You will see the channel list display on the right side of the screen.

Creating a 'Favorites' list

To quickly access your most-watched channels, you can create a '**Favorites**' list.

To create your 'Favorites' list:

1. Press the [**Quick Setup**] menu button on your remote.
2. Select **Channel> Favorites List**
3. Using the up/down arrows on the [**D-pad**] of your remote, select a channel and press [**OK**].

   A heart-shaped indicator will appear beside the channel as confirmation that it has been successfully added.

Viewing your 'Favorites' list

To view channels that you've added to your Favorites list simply press [**OK**] on your remote to call out the Channel list.

The channel list appears on the right side of the screen and heart-shaped icons are shown next to the channels that make up your Favorites list.

VOD

If you want to view content through Video-on-demand, then select the **VOD** icon to launch the main screen of the menu. Two rows of logos for the following pre-installed Video-on-demand apps appear:

- Netflix
- Amazon Instant Video
- YouTube
- Vudu
- Dailymotion
- Viewster

These logos are fixed elements of the **VOD** menu screen design to provide a convenient way to launch the apps from the TV. To the left of the logos, a thumbnail image of a movie poster is also shown. The poster is for a Vudu-recommended movie to rent or purchase.

The thumbnails of the movie poster images that appear on this page are dynamic (meaning they will change) as long as your TV is connected to the Internet. The poster image of the movie (or TV show) will change based on the latest movies that have been released or popular TV shows.

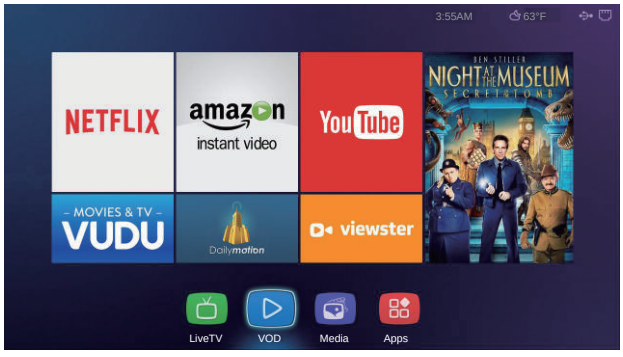

Figure 21. VOD Screen (as it appears for the USA market)

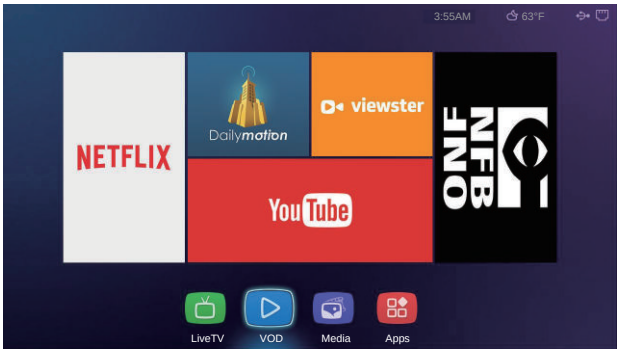

Figure 22. VOD screen (as it appears for Canada and Mexico markets)

Netflix®

Netflix is a streaming media company that provides movies and TV shows for you to view online or stream right to your TV. If you are a Netflix member, simply enter your email address and password to sign in to your Netflix account. If you don't already have an account, then you can try the service (FREE) for one month by creating an account. If you enjoy your trial membership, then you don't have to do anything. Your membership will automatically continue for as long as you choose to remain a member. Once you click on the Netflix icon to launch the application, you can register for the service directly from your TV. Simply follow the prompts to get started.

NOTE

Netflix is available in select countries. Streaming membership required.

Amazon Instant Video

In North America Amazon Instant Video is Only Available to Customers Residing in the United States.

YouTube and Viewster

You can use the YouTube and Viewster apps to view videos on the TV.

Vudu

Vudu is a video streaming service that enables you to rent or purchase High-Definition movies and TV shows. If you are not a Vudu subscriber yet, then you will need to create an account to use the service. Once you click on the Vudu icon to launch the application, you can register for the service directly from your TV. Simply follow the on-screen prompts to get started.

NOTE

VUDU is currently available in the U.S. only.

Dailymotion

You can use the Dailymotion app to view videos on the TV.

Media

Media is a central location for you to upload and view or listen to different types of content (for example, your photos, music and movies) through the following methods:

- A USB thumb drive or hard drive
- Your mobile phone, tablet or other personal device: You can stream movies, pictures and photos that are stored on your personal device and play or view the content on your TV.

When you connect your thumb drive or other personal device to the TV, the **TV** automatically detects it and displays a device icon in the top right corner of the screen. Our company-developed HiMedia technology is what this Media feature is developed upon.

Panels that appear on the Media screen

The **Media** screen displays three panels: **Picture, Video, Music.**

File formats that may be supported

NOTE: Due to differences in programming tools and other factors, some of the file formats that are listed may or may not be supported.

Medium	File Format
Videos	.avi(MPEG2, Divx), .mkv(Divx), .mpeg(MPEG2), .wmv(Divx, XviD)
Picture	.JPG
Music	.avi(mp3, WMA, ac3), .mp3

Viewing Videos

While viewing videos you will see a number of icons appear at the bottom of the screen. You can use the [**D-pad**] button of your remote to select these icons that will control the video.

Browsing Content

To browse through content based on the type that you wish to access:

1. Navigate to the appropriate menu tab on the left side of the screen and select **Music, Video** or **Picture.** The library of items displays on the right side of the screen.
2. Navigate to the right side of the screen and click on the name of the folder that contains your content.
3. Make your selection to play or view the content.

If you want to close out of the Media center, then press the [**Exit**] button on your remote.

Viewing Pictures as a Slideshow

To view pictures in a slideshow:

1. Navigate to the **Pictures** tab.
2. Click on **Start the Slideshow**.

The slideshow of your pictures begins to play. To stop the slideshow, press the [**OK**] button on your remote and press it again to restart it.

An **Edit Picture** window displays.

Apps

Numerous factory-installed apps are available for you to choose from for your entertainment preferences.

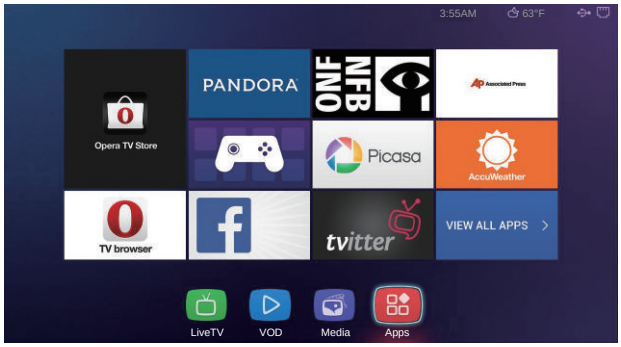

Figure 23. Apps screen

'Hot Apps' section

The most popular apps appear at the top of the **Apps** Home screen in the 'Hot App's section. The second part of the screen (under the 'All apps' section) provides a collective view of them to browse and select from.

Netflix®

Netflix is a streaming media company that provides movies and TV shows for you to view online or stream right to your TV. If you are a Netflix member, simply enter your email address and password to sign in to your Netflix account. If you don't already have an account, then you can try the service (FREE) for one month by creating an account. If you enjoy your trial membership, then you don't have to do anything. Your membership will automatically continue for as long as you choose to remain a member. Once you click on the Netflix icon to launch the application, you can register for the service directly from your TV. Simply follow the prompts to get started.

NOTE

Netflix is available in select countries. Streaming membership required.

Vudu™

Vudu is a video streaming service that enables you to rent or purchase High-Definition movies and TV shows. If you are not a Vudu subscriber yet, then you will need to create an account to use the service. Once you click on the Vudu icon to launch the application, you can register for the service directly from your TV. Simply follow the on-screen prompts to get started.

NOTE

VUDU is currently available in the U.S. only.

Amazon Instant Video™

Amazon is an Internet video on demand service that offers television shows and movies for rent or purchase. If you are not an Amazon subscriber yet, then you will need to create an account to use the service. Once you click on the Amazon icon to launch the application, you can register for the service directly from your TV. Simply follow the on-screen prompts to get started.

NOTE

In North America Amazon Instant Video is Only Available to Customers Residing in the United States.

YouTube™

YouTube allows you to upload, view and share videos. You must create an account to use the service.

AccuWeather™

The AccuWeather app provides accurate local and national weather forecasts every minute and hour to help you plan. This app also delivers up-to-date reports, video presentations and much more content.

To navigate through the AccuWeather center, press the left/right buttons on the [**D-pad**] of your remote to move the cursor and make your selection.

Pandora®

Pandora is a service that streams various genres of music and provides recommendations.

NOTE

Pandora is available in select countries.

Pandora, the Pandora logo, and the Pandora trade dress are trademarks or registered trademarks of Pandora Media, Inc. Used with permission.

All Apps

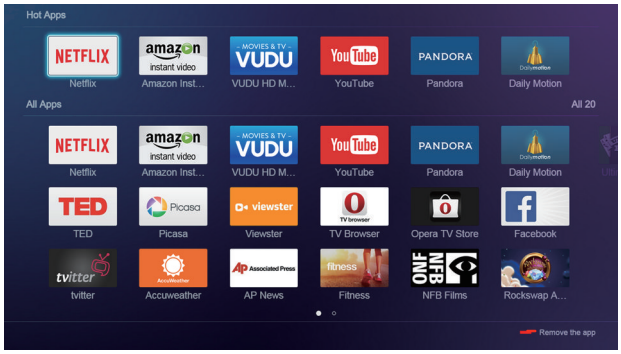

Figure 24. Collective view of all the factory-installed apps

Opera TV Store™

Opera TV Store contains cloud-based apps optimized for your TV. The apps range from Video, Music, Social Networking, Games and News Information.

To begin using Opera TV Store, you simply need to accept the End-User License Agreement and then select the app that you want to use.

Opera TV Browser

The Opera TV Browser allows you to surf the Internet on your TV and provides quick access to the Google™ search engine.

To view a website or search using the Opera TV Browser:

1. Using the [**D-pad**] on your remote, navigate to the **Opera** web browser icon underneath the **Opera Store** icon.
2. Press [**OK**] on your remote.
   The browser window displays.
3. Using the [**D-pad**] on your remote, navigate up to the URL bar to place your cursor there.
4. Press [**OK**] on your remote to bring up the onscreen keyboard.
5. Type the website address or search term on the text field.
6. Press the [**Blue**] special function button towards the top of the remote (under the number pad).
   The website address or search term you've typed populates in the URL bar window.
7. Select the forward arrow (to the right of the URL bar) and press [**OK**] on your remote to load the page or start the search.

Installing an App

Even though your TV has numerous factory-installed apps, there may be others that you'd like to download.

To install an app:

1. From the **Home** screen, click on the **Opera TV Store** icon.
2. Navigate to the **Search** tab at the top of the screen.
3. Begin typing the name of the app. As you begin typing the first two to three letters the Opera Store suggests words to quicken your search time.
4. Use the [**D-pad**] of your remote to select the app.
   A page displays that shows a written description of the app.
5. Click on **Open** or **Add to Favorites.**

Removing an App

You can only delete apps that you've downloaded to the TV. Factory-installed apps can not be deleted.

To delete an app:

1. From the **Apps** screen, use the directional arrows on the [**D-pad**] button of your remote to select the app that you want to remove.
2. Press the [**Red**] special function button underneath the numerical keypad of your remote.
   A dialog message displays that asks if you're sure you want to remove the app.

3. Press [**OK]** on your remote.
   A confirmation message displays and the icon is removed from the **Apps** list screen.

NOTE

If an app is deleted,the information related to that app is also removed.

Moving App Icons around

Apps can not be moved around on the screen.

Customizing the name of your TV

If you have several TV's in your home then you may want to customize the name of your TV**.** By giving your TV a name, it will make it easier for you to identify it when connecting devices to the TV to stream or mirror content.

To customize the name of your TV:

1. Press the [**Quick Setup**] menu button on your remote.
2. Go to **Network>TV Name.**
3. Select **User Input** to bring up the keyboard and begin typing the name.
4. When you are finished, power off the TV and power it back on for the change to take effect.

Using Anyview Cast to mirror content from your device to the TV screen

The Hisense Anyview Cast is an app that enables you to share (or cast) a video, audio or image from your Android-based device to the TV.

From your tablet or phone

To mirror content from your tablet to the TV:

1. From the TV Settings, go to **Network** and turn on the **Anyview Stream** setting.
2. Press the [**All Apps]** button on your remote and select the **Anyview Cast** app.
3. Turn on your Android-based device and go to **Settings > Display > Cast Screen**.
   NOTE: Some Android-based devices may not support casting.
4. Find your TV in the list of devices that displays and select it.
5. Wait for the ‘Creating Connection’ progress bar to complete on the TV screen and the video or image will display in a moment.

Software updates for your TV

The software (also referred to as firmware) is part of what powers your TV. Hisense will provide software updates to continuously enhance your TV and correct any issues that may impact your user experience; therefore, we recommend that you keep your TV connected to the Internet to automatically receive updates when they are available.

You can choose to receive updates automatically or check for software updates and install them manually.

Checking for updates automatically

In order for your TV to receive software notification updates automatically, it must be turned '**On**' and connected to the Internet. The **Auto Firmware Upgrade** setting (which enables your TV to receive the updates automatically) is turned to '**On**' by factory default. If you turn the **Auto Firmware Upgrade** setting '**Off**', it will disable this functionality of your TV.

Note: While your TV is on and checking for updates, the program that you are watching will not be interrupted.

Disabling the Auto Firmware Upgrade feature

If you do not want your TV to automatically check for updates and to receive notifications when they are available, then:
1. Using your remote, press the [**Quick Setup**] menu button.
2. Go to **About TV > Auto Firmware Upgrade** and turn the feature **'Off'**

By doing this, you will have to manually check to see if you have the latest software update.

Checking for the latest firmware

To manually check for the latest firmware*:*

1. Using your remote, press the [**Quick Setup**] menu button.
2. Go to **About TV > Check Firmware Upgrade.**

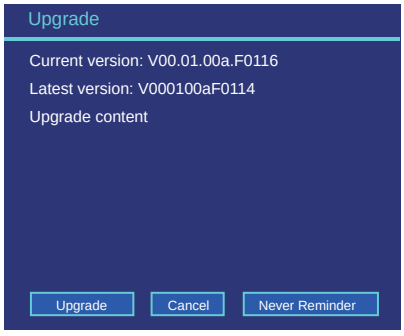

Figure 25. Check Firmware screenshot

Manually installing software updates

If you have not kept your TV connected to the Internet or you turned the **Auto Firmware Upgrade** feature '**Off**' then you'll need to manually install the software.

If the **Check Firmware Upgrade** screen shows that an updated package is available, then:
1. From the Check Firmware submenu, select **Download upgrade pack.**
2. Follow the rest of the steps that display

Quick Problem-Solving Tips

When you experience an issue with your TV, turn it off and on again. If this does not resolve the problem, then refer to the tips below. If the problem is still not resolved, then contact us.

ISSUES	POSSIBLE SOLUTIONS
There is no sound or picture from the TV	• Check to see if the power cord is plugged into a power outlet. • A power switch on the right side bottom edge of the front panel must be turned on. Press the ⏻ **Power button** on the remote control to activate the unit from 'Standby' mode. • Check to see if the LED light is on or not. If it is, then the TV is receiving power.
I have connected an external source to my TV and do not see a picture and/or hear any sound	• Check for the correct output connection on the external source and for the correct input connection on the TV. • Make sure you have made the correct selection for the input mode for the incoming signal.
When I turn on my TV, there is a delay for a few seconds before the picture appears. Is this normal?	• Yes, this is normal. The TV is initializing and searching for previous setting information.
The picture is normal but there is no sound	• Check the volume settings. • Check if 'Mute' mode is set to **On**.
Sound but no picture or black and white picture	• If the picture is black and white, unplug the TV from the AC outlet and replug it after 60 seconds. • Check that the Color is set to 50 or higher. • Try different TV channels.
The sound and/or picture is distorted or appears wavy	• An electric appliance may be affecting the TV. Turn off any appliances that are nearby and move it farther away from the TV. • Insert the power plug of the TV set into another power outlet.
The sound and picture is blurry or cuts out	• If using an external antenna, check the direction, position and connection of the antenna. • Adjust the direction of your antenna or reset or fine tune the channel.
A horizontal or vertical stripe appears on the picture and/or the picture is shaking	• Check to see if there is an appliance or electric tool nearby that is causing interference.
The plastic cabinet makes a "clicking" type of sound	• The 'click' sound can occur when the temperature of the television changes. This change causes the television cabinet to expand or contract, which makes the sound. This is normal and the TV is OK.
The remote control does not work	• Confirm that TV still has power and is operational. • Change the batteries in the remote control. • Check if the batteries are correctly installed.

NOTE

For usage in Mexico , operation of this equipment is subject to the following two conditions : 1) it is possible that this device doesn't cause any detrimental interference and 2) this device must take any kind of interference, including that which may cause its malfunctioning.

Disclaimer: Images throughout this document are for illustrative purposes only and may differ from the actual product.