Honeywell

Installation manual

SmartVFD HVAC

Variable Frequency Drives for Variable Torque Applications

By using this Honeywell literature, you agree that Honeywell will have no liability for any damages arising out of your use or modification to, the literature. You will defend and indemnify Honeywell, its affiliates and subsidiaries, from and against any liability, cost, or damages, including attorneys' fees, arising out of, or resulting from, any modification to the literature by you.

38-00007-01

INDEX

Document: DPD00323D
Version release date: 2.5.14

1. Safety 2
1.1 Danger 2
1.2 Warnings 3
1.3 Grounding and ground fault protection 3
1.4 Running the motor 4
2. Receipt of delivery 5
2.1 'Product modified' sticker 5
2.2 Unpacking and lifting the drive 5
2.2.1 Lifting frames MR8 and MR9 6
2.3 Type designation code 7
2.4 Accessories 8
3. Mounting 9
3.1 Dimensions 9
3.1.1 Wall mount, MR4-MR7 9
3.1.2 Wall mount, MR8 and MR9 11
3.1.3 Flange mount 12
3.2 Cooling 17
4. Power cabling 19
4.1 UL standards on cabling 20
4.1.1 Cable dimensioning and selection 20
4.2 Brake resistor cables 22
4.3 Control cables 22
4.4 Cable installation 23
4.4.1 Frames MR4 to MR7 23
4.4.2 Frames MR8 and MR9 30
4.4.3 Cable and motor insulation checks 38
4.5 Installation in corner-grounded network 38
5. Commissioning 39
5.1 Commissioning of the SmartVFD HVAC 40
5.2 Changing EMC protection class 41
5.2.1 Frames MR4 to MR6 41
5.2.2 Frames MR7 and MR8 43
5.2.3 Frame MR9 45
6. Control unit 47
6.1 Control unit cabling 48
6.1.1 Control cable sizing 48
6.1.2 Control terminals and DIP switches 49
6.2 Fieldbus connection 52
6.2.1 Prepare for use through ethernet 52
6.2.2 Prepare for use through MS/TP 54
6.2.3 RS485 cable data 57
6.3 Battery installation for Real Time Clock (RTC) 58
6.4 Galvanic isolation barriers 59
7. Product data 60
7.1 Power ratings 60
7.1.1 Mains voltage 208-240 V 60

7.1.2 Mains voltage 380-480V 61
7.1.3 Definitions of overloadability 62
7.2 SmartVFD HVAC - technical data 63
7.2.1 Technical information on control connections 66

1. SAFETY

This manual contains clearly marked cautions and warnings which are intended for your personal safety and to avoid any unintentional damage to the product or connected appliances.

Please read the information included in cautions and warnings carefully.

The cautions and warnings are marked as follows:

	= DANGEROUS VOLTAGE!
	= WARNING or CAUTION

Table 1. Warning signs

1.1 Danger

	The **components of the power unit of the Smart VFD HVAC are live** when the drive is connected to mains potential. Coming into contact with this voltage is **extremely dangerous** and may cause death or severe injury.
	The **motor terminals U, V, W and the brake resistor terminals are live** when the drive is connected to mains, even if the motor is not running.
	After disconnecting the drive from the mains, **wait** until the indicators on the keypad go out (if no keypad is attached see the indicators on the cover). Wait 5 more minutes before doing any work on the connections of the drive. Do not open the cover before this time has expired. After expiration of this time, use a measuring equipment to absolutely ensure that no voltage is present. **Always ensure absence of voltage before starting any electrical work!**
	The control I/O-terminals are isolated from the mains potential. However, the **relay outputs and other I/O-terminals may have a dangerous control voltage** present even when the drive is disconnected from mains.
	Before connecting the drive to mains make sure that the front and cable covers of the drive are closed.
	During a ramp stop (see the Application Manual), the motor is still generating voltage to the drive. Therefore, do not touch the components of the drive before the motor has completely stopped. Wait until the indicators on the keypad go out (if no keypad is attached see the indicators on the cover). Wait additional 5 minutes before starting any work on the drive.

1.2 Warnings

⚠	The Honeywell Smart VFD HVAC is meant for **fixed installations only**.
⚠	**Do not perform any measurements** when the drive is connected to the mains.
⚠	The **touch current** of the Honeywell Smart VFD HVAC exceeds 3.5mA AC. According to standard EN61800-5-1, **a reinforced protective ground connection** must be ensured. See chapter 1.3.
⚠	If the drive is used as a part of a machine, the **machine manufacturer is responsible** for providing the machine with a **supply disconnecting device** (EN 60204-1).
⚠	Only **spare parts** delivered by Honeywell can be used.
⚠	At power-up, power brake or fault reset **the motor will start immediately** if the start signal is active, unless the pulse control for Start/Stop logic has been selected. Futhermore, the I/O functionalities (including start inputs) may change if parameters, applications or software are changed.Disconnect, therefore, the motor if an unexpected start can cause danger.
⚠	The **motor starts automatically** after automatic fault reset if the autoreset function is activated. See the Application Manual for more detailed information.
⚠	**Prior to measurements on the motor or the motor cable**, disconnect the motor cable from the drive.
⚠	**Do not touch the components on the circuit boards**. Static voltage discharge may damage the components.
⚠	Check that the **EMC level** of the drive corresponds to the requirements of your supply network. See chapter 5.2.
⚠	In a domestic environment, this product may cause radio interference in which case supplementary mitigation measures may be required.

1.3 Grounding and ground fault protection

⚠ **CAUTION!**

The Honeywell Smart VFD HVAC AC drive must always be grounded with an grounding conductor connected to the grounding terminal marked with ⏚.

The touch current of the drive exceeds 3.5mA AC. According to EN61800-5-1, one or more of the following conditions for the associated protective circuit shall be satisfied:

1. A fixed connection and
   a) the **protective earthing conductor** has a cross-sectional area of at least 10 mm² Cu or 16 mm² Al through its total run.
   b) an automatic disconnection of the supply in case of loss of continuity of the protective conductor. See chapter 4.

c) provision of an additional terminal for a second **protective earthing conductor** of the same cross-sectional area as the original **protective earthing conductor**.

OR

2. Connection with an industrial connector according to IEC 60309 and a minimum **protective earthing connector** cross-section of 2.5mm² as part of a multi-conductor power cable. Adequate strain relief shall be provided.

NOTE: Due to the high capacitive currents present in the drive, fault current protective switches may not function properly.

⚠	**Do not perform any voltage withstand tests** on any part of the drive. There is a certain procedure according to which the tests shall be performed. Ignoring this procedure may result in damaged product.

1.4 Running the motor

MOTOR RUN CHECK LIST

⚠	**Before starting the motor**, check that the motor is **mounted properly** and ensure that the machine connected to the motor allows the motor to be started.
⚠	Set the maximum motor speed (frequency) according to the motor and the machine connected to it.
⚠	**Before reversing the motor** make sure that this can be done safely.
⚠	Make sure that no power correction capacitors are connected to the motor cable.
⚠	Make sure that the motor terminals are not connected to mains potential.

NOTE! You can download the English and French product manuals with applicable safety, warning and caution information from **https://customer.honeywell.com/en-US/Pages/default.aspx**.

REMARQUE Vous pouvez télécharger les versions anglaise et française des manuels produit contenant l'ensemble des informations de sécurité, avertissements et mises en garde applicables sur le site **https://customer.honeywell.com/en-US/Pages/default.aspx**.

2. RECEIPT OF DELIVERY

Check the correctness of delivery by comparing your order data to the drive information found on the package label. If the delivery does not correspond to your order, contact the supplier immediately. See chapter 2.3.

2.1 'Product modified' sticker

In the small plastic bag included with delivery you will find a silver *Product modified* sticker. The purpose of the sticker is to notify the service personnel about the modifications made in the drive. Attach the sticker on the side of the drive to avoid losing it. Should the drive be later modified mark the change on the sticker.

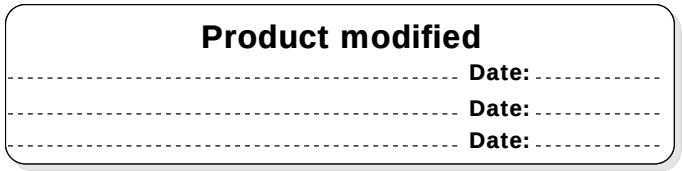

Figure 1. 'Product modified' sticker

2.2 Unpacking and lifting the drive

The weights of the drives vary greatly according to the size. You may need to use a piece of special lifting equipment to remove the drive from its package. Note the weights of each individual frame size in Table 2 below.

Frame	Weight [kg]	Weight [lb.]
MR4	6.0	13.2
MR5	10.0	22.0
MR6	20.0	44.1
MR7	37.5	82.7
MR8	70.0	154.3
MR9	108.0	238.1

Table 2. Frame weights

If you decide to use a piece of lifting equipment see picture below for recommendations to lift the drive.

2.2.1 Lifting frames MR8 and MR9

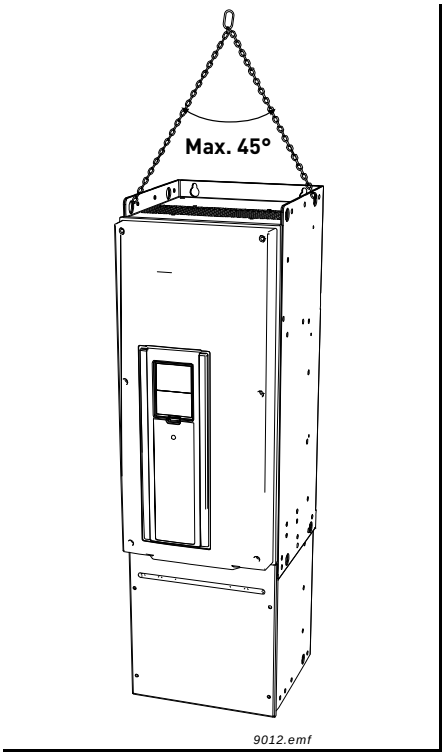

NOTE: Place the lifting hooks symmetrically in at least two holes.The lifting device must be able to carry weight of the drive.

NOTE: The maximum allowed lifting angle is 45 degrees.

Figure 2. Lifting bigger frames

The Honeywell Smart VFD HVAC undergoes scrupulous tests and quality checks at the factory before it is delivered to the customer. However, after unpacking the product, check that no signs of transport damages are to be found on the product and that the delivery is complete.

Should the drive have been damaged during the shipping, please contact primarily the cargo insurance company or the carrier.

2.3 Type designation code

Honeywell type designation code is formed of a four-segment code. Each segment of the type designation code uniquely corresponds to the product and options you have ordered. The code is of the following format:

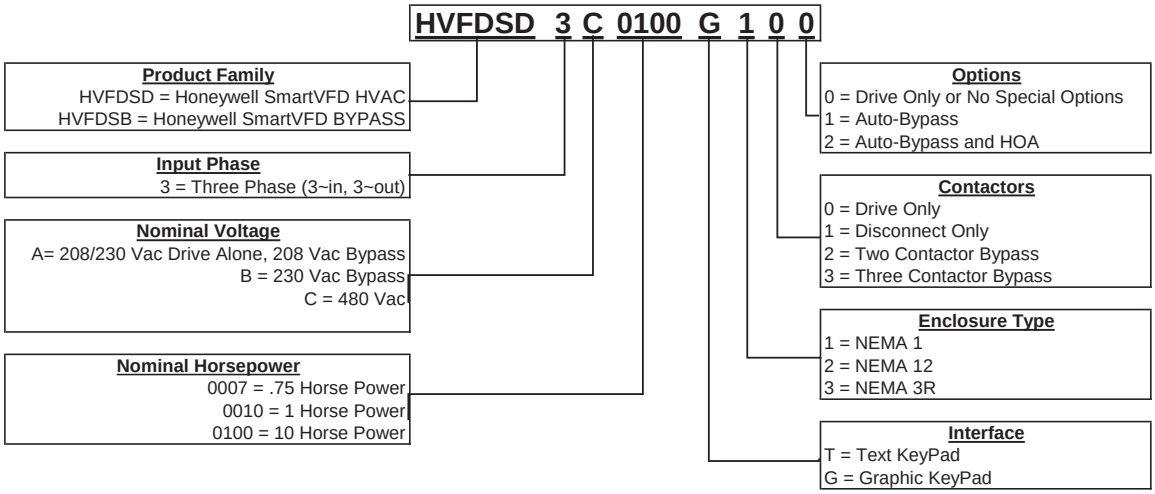

11447_uk

2.4 Accessories

After having opened the transport package and lifted the converter out, check immediately that these various accessories were included in the delivery:

- Rubber grommets (sizes vary according to frame)
- Power cable clamps for EMC grounding
- Screws for fixing the power cable clamps
- Control cable grounding clamps
- M4 screw for EMC level change in frame MR7
- Additional grounding screw (if necessary, see chapter 1.3)
- Ferrite holder
- Optional plastic shield to prevent unintended contact with live parts from front (MR8 and MR9, IP00)

3. MOUNTING

The drive must be mounted in vertical position on the wall. Ensure that the mounting plane is relatively even.

The drive shall be fixed with four screws (or bolts, depending on the unit size).

3.1 Dimensions

3.1.1 Wall mount, MR4-MR7

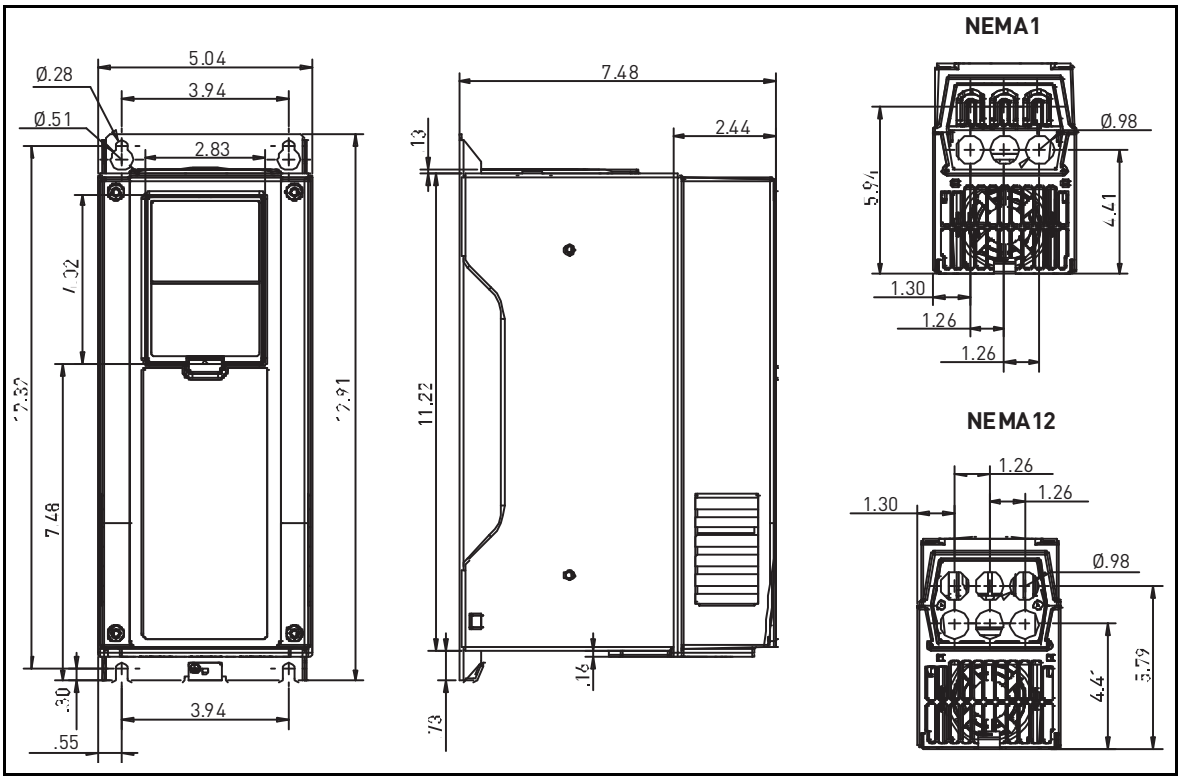

Figure 3. SmartVFD HVAC dimensions, MR4, wall mount

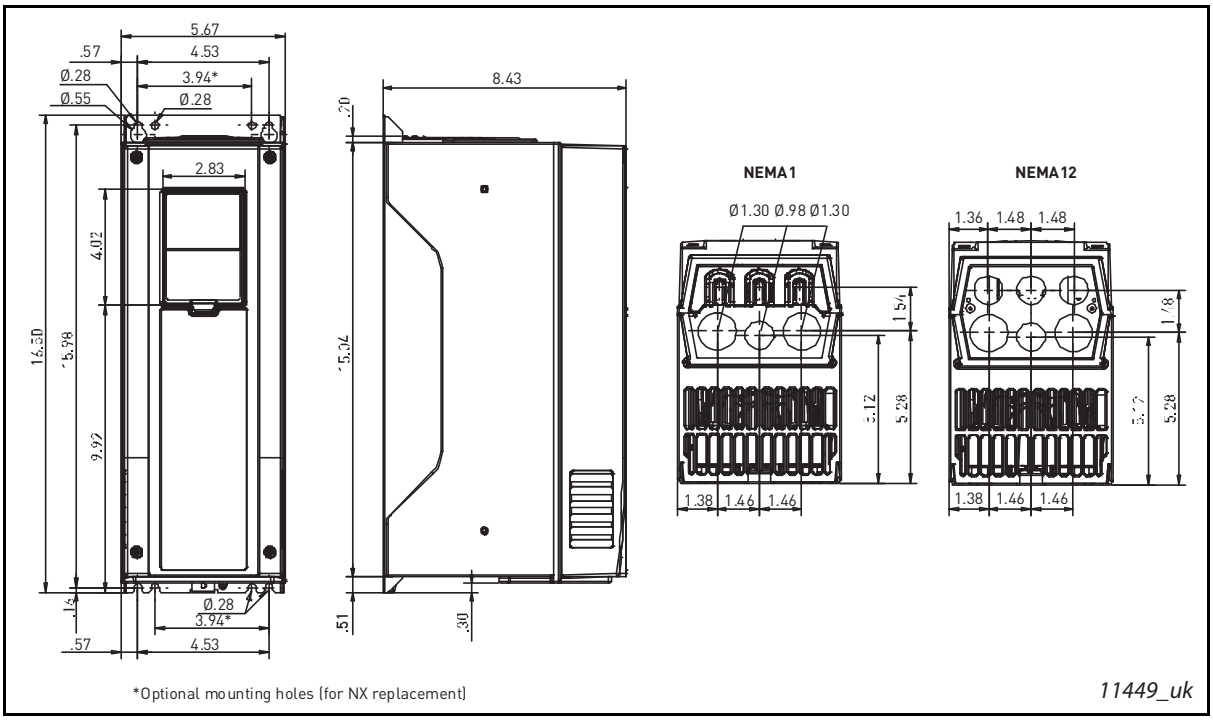

Figure 4. SmartVFD HVAC dimensions, MR5, wall mount

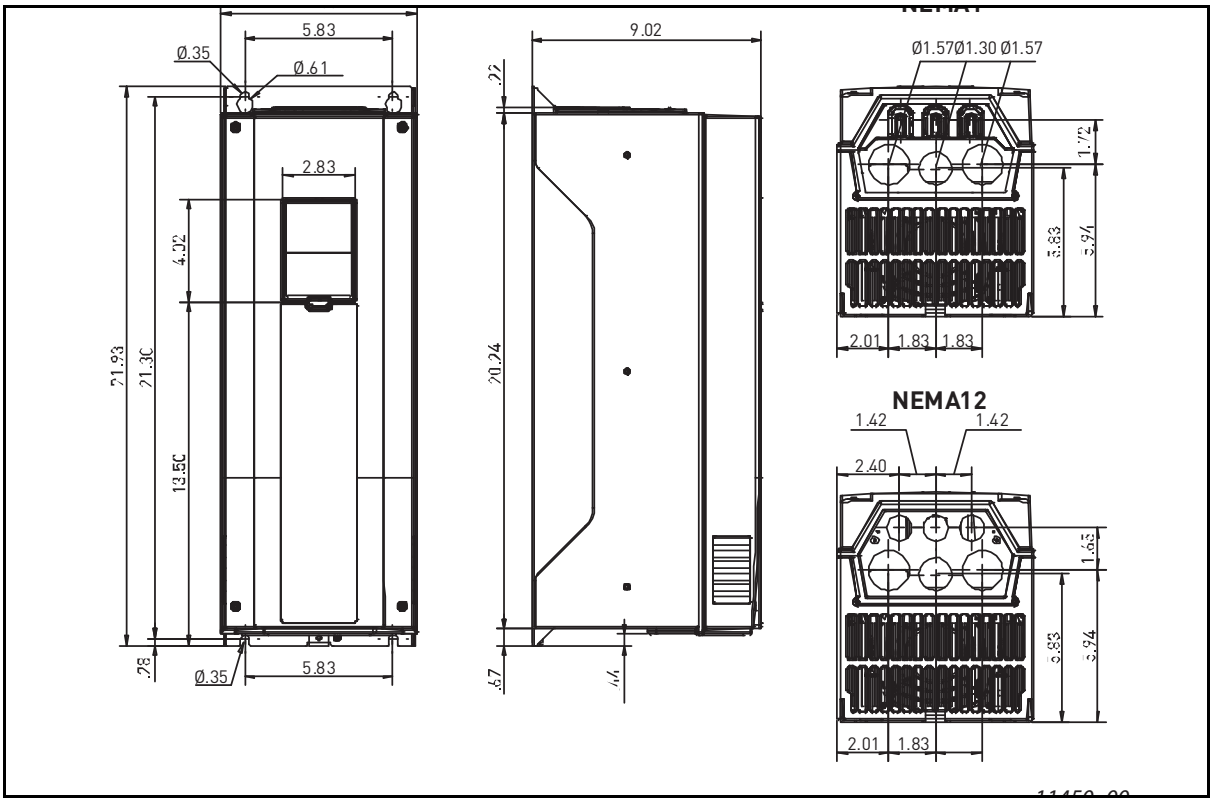

Figure 5. SmartVFD HVAC dimensions, MR6, wall mount

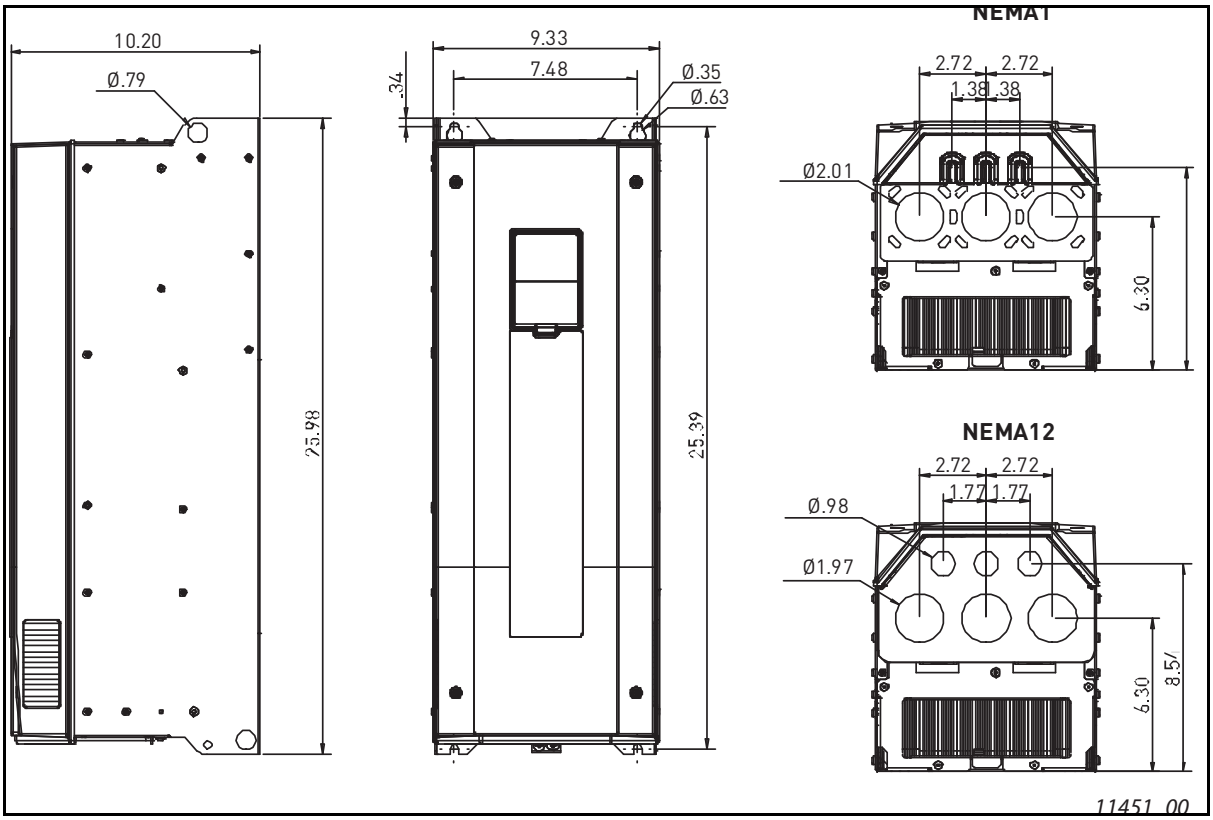

Figure 6. SmartVFD HVAC dimensions, MR7, wall mount

3.1.2 Wall mount, MR8 and MR9

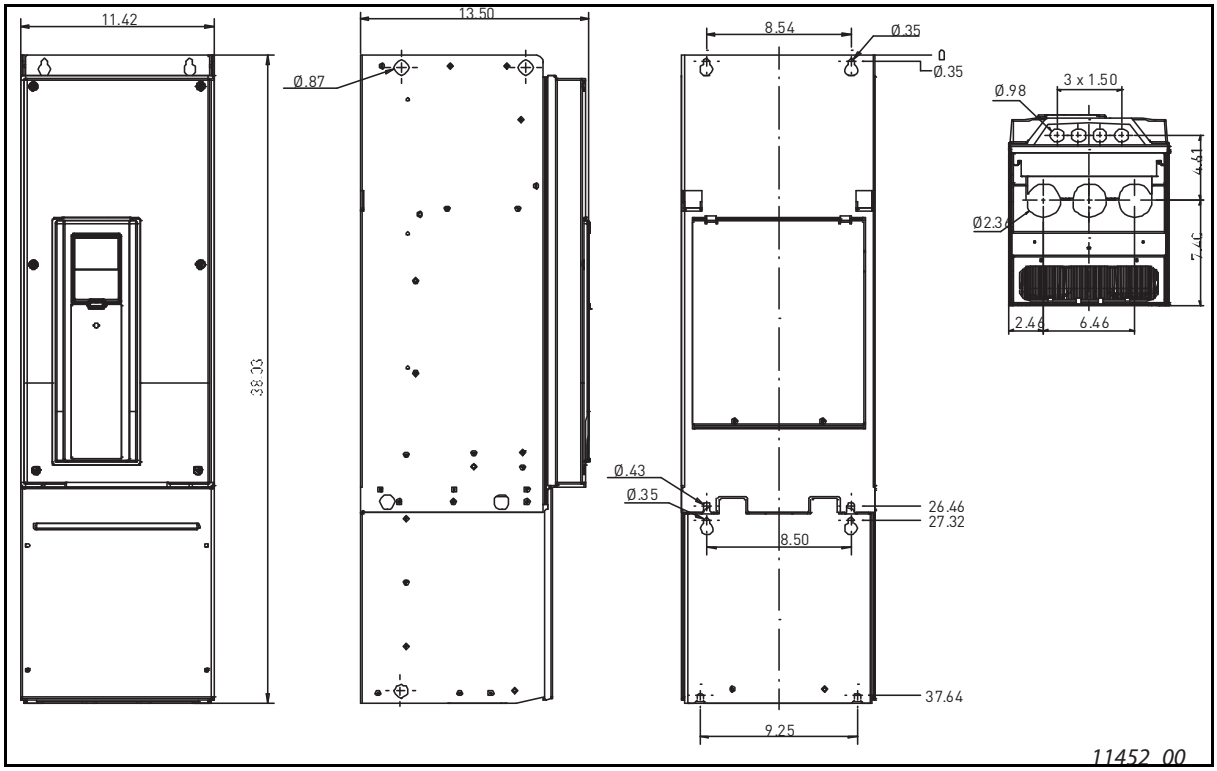

Figure 7. AC drive dimensions, MR8 NEMA1 and NEMA12

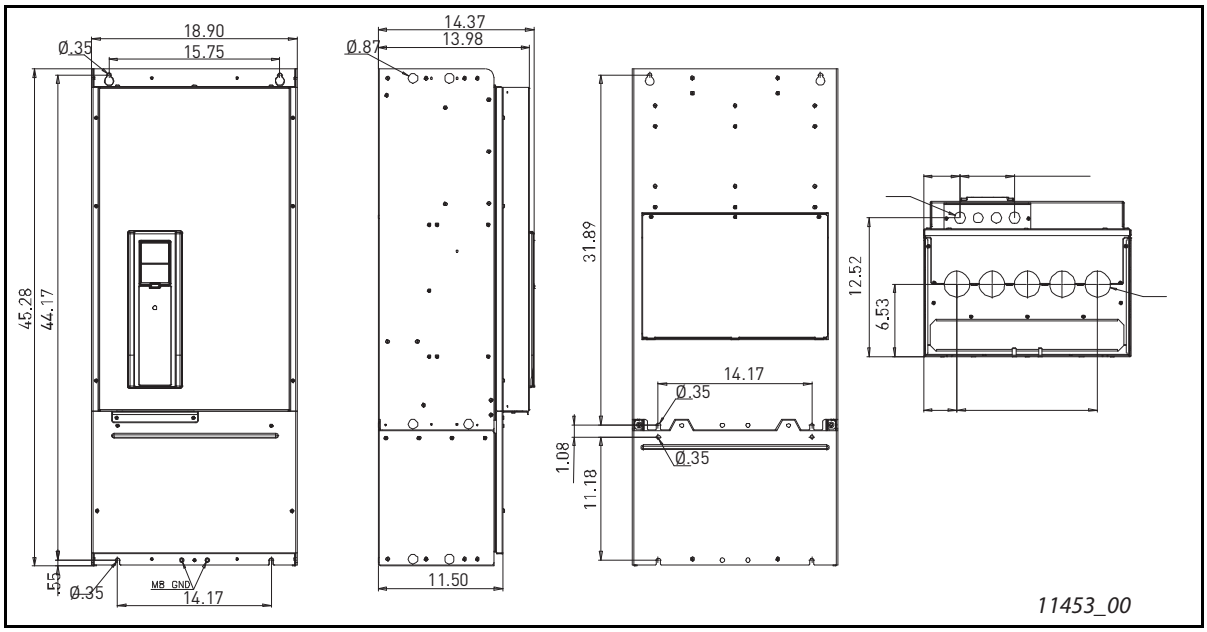

Figure 8. AC drive dimensions, MR9 NEMA1 and NEMA12 (preliminary)

3.1.3 Flange mount

The AC drive can also be recessed into the cabinet wall or similar surface. A special flange mount option is available for this purpose. For an example of a flange-mounted drive, see Figure 9.

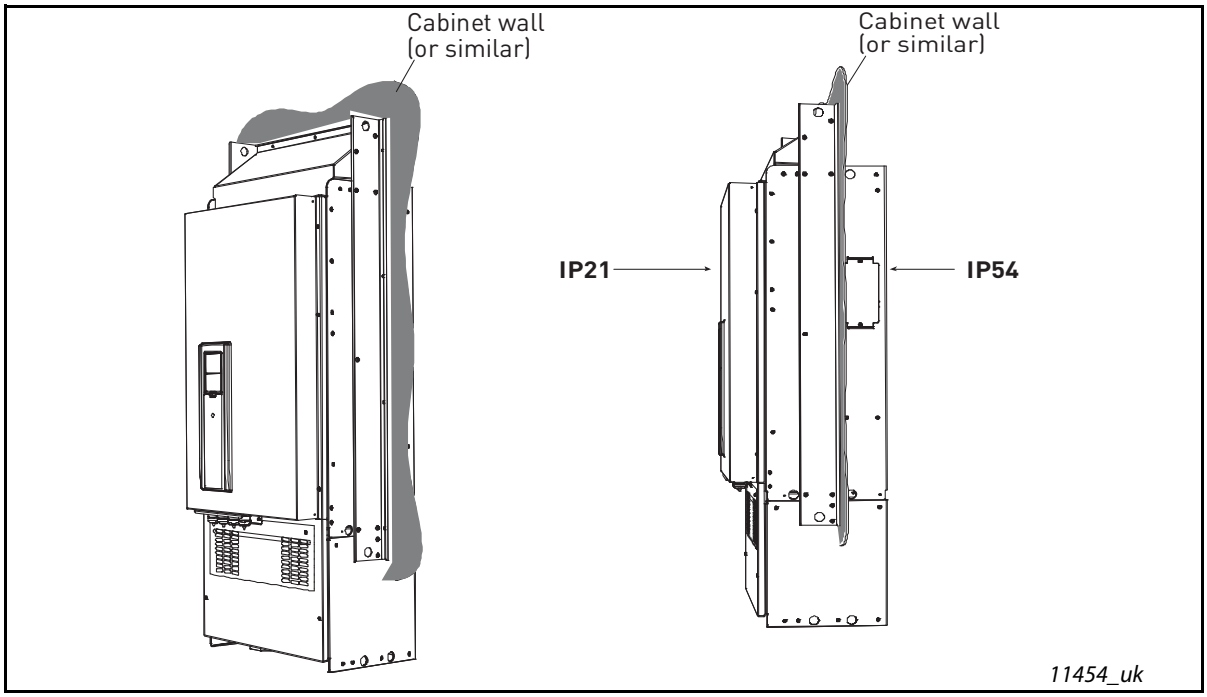

Figure 9. Example of flange mount (frame MR9)

3.1.3.1 Flange mount - Frames MR4 to MR6

Figure 10. presents the dimensions of the mounting opening and Figure 11. the depth dimensions of the drives with the flange mount option.

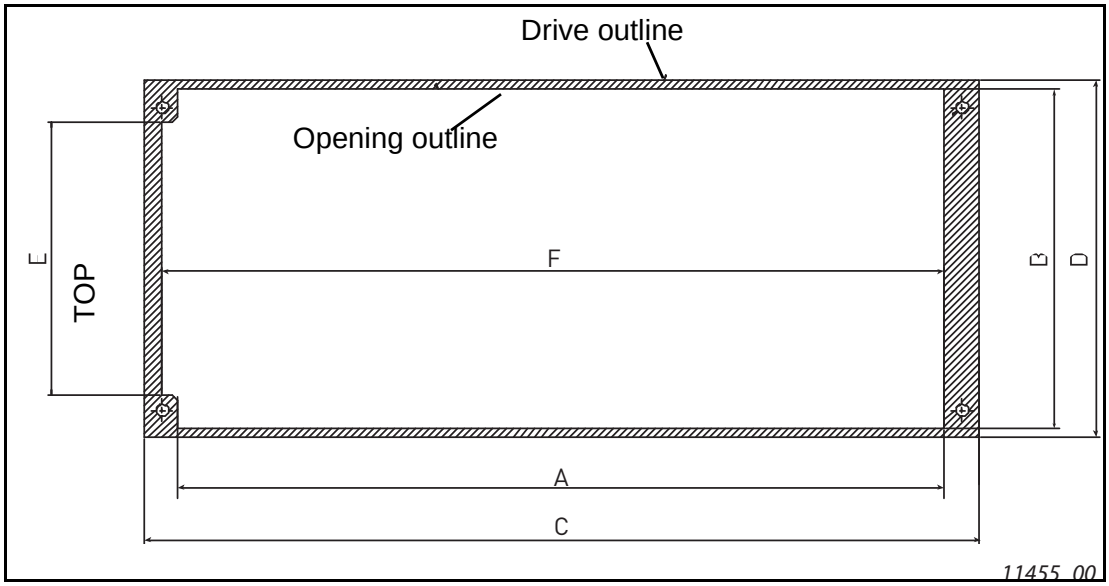

Figure 10. Flange mount cutout dimensions for MR4 to MR6

Frame	A	B	C	D	E	F
MR4	12.20	5.39	13.27	5.67	4.33	12.44
MR5	16.06	5.98	17.09	6.30	5.20	16.30
MR6	21.02	7.99	22.05	8.31	7.24	21.30

Table 3. Flange mount cutout dimensions for MR4 to MR6 [in]

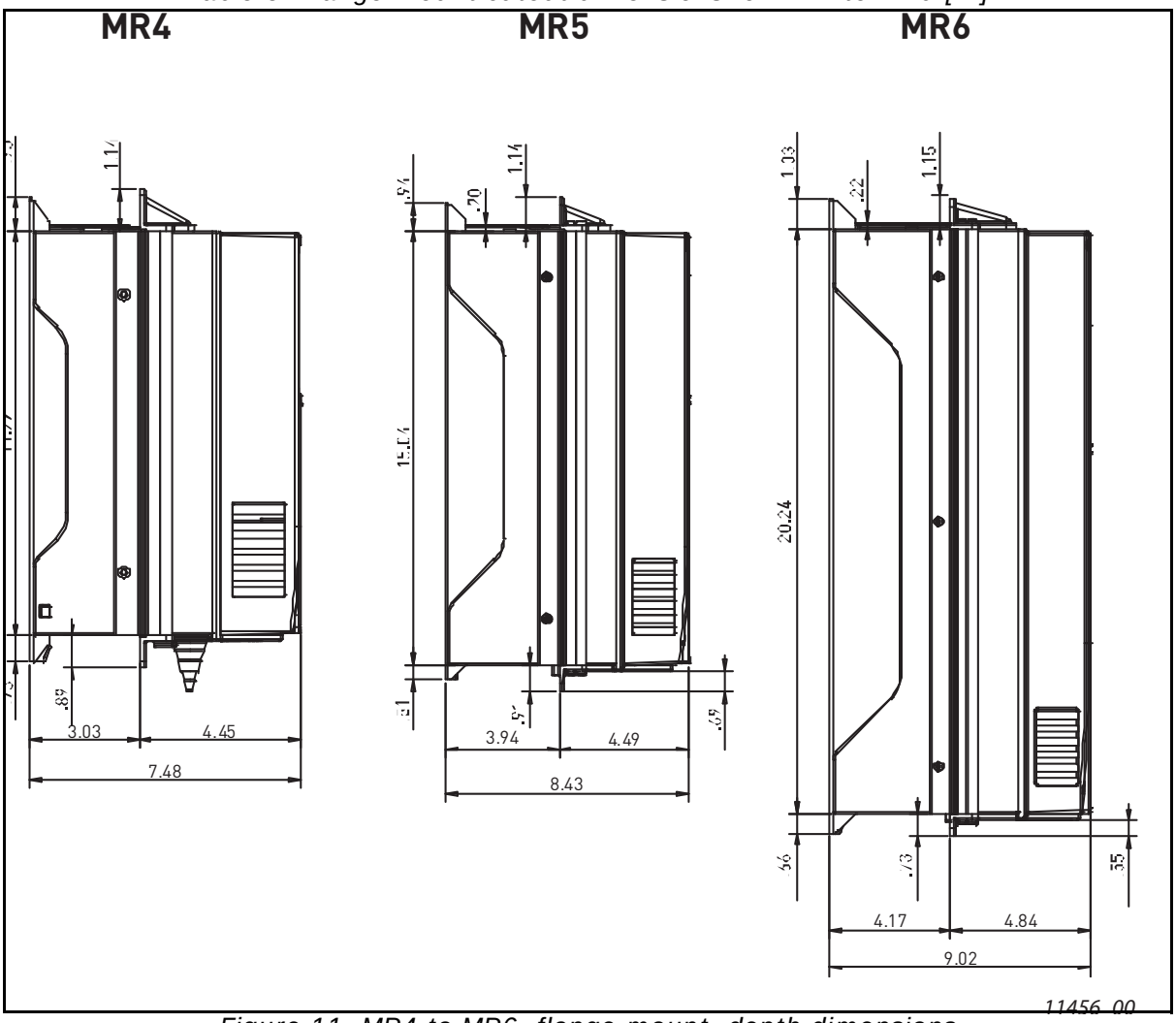

Figure 11. MR4 to MR6, flange mount, depth dimensions

3.1.3.2 Flange mount MR7 to MR9

Figure 12. presents the dimensions of the mounting opening and Figure 13. the dimensions of the drives with the flange mount option.

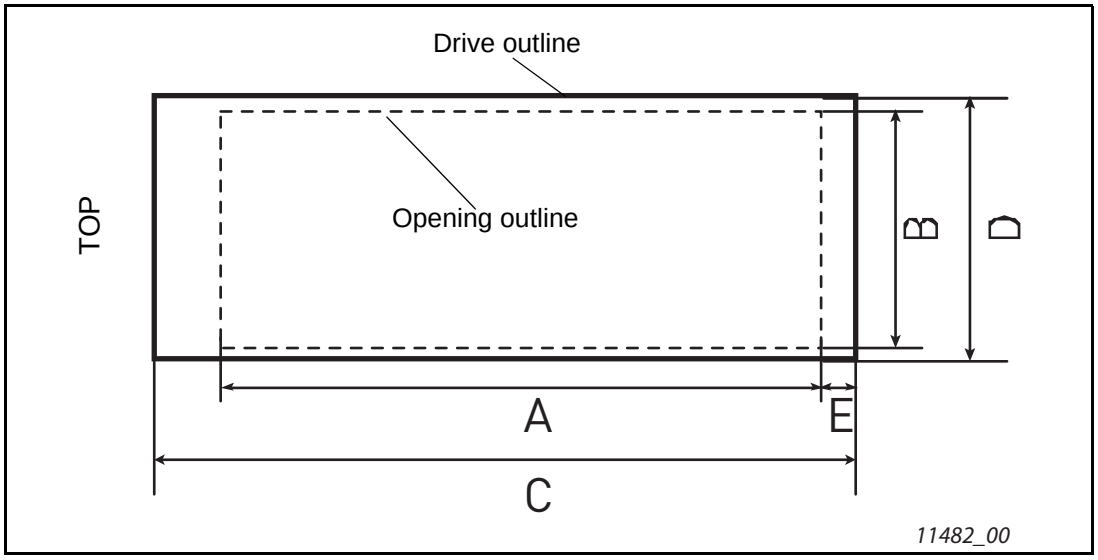

Figure 12. Flange mount cutout dimensions for MR7 to MR9

Frame	A	B	C	D	E
MR7	25.79	9.45	26.85	10.55	.53
MR8	33.82	11.73	34.96	14.13	.67
MR9	38.39	19.09	41.34	20.87	2.13

Table 4. Flange mount cutout dimensions for MR7 to MR9 [in]

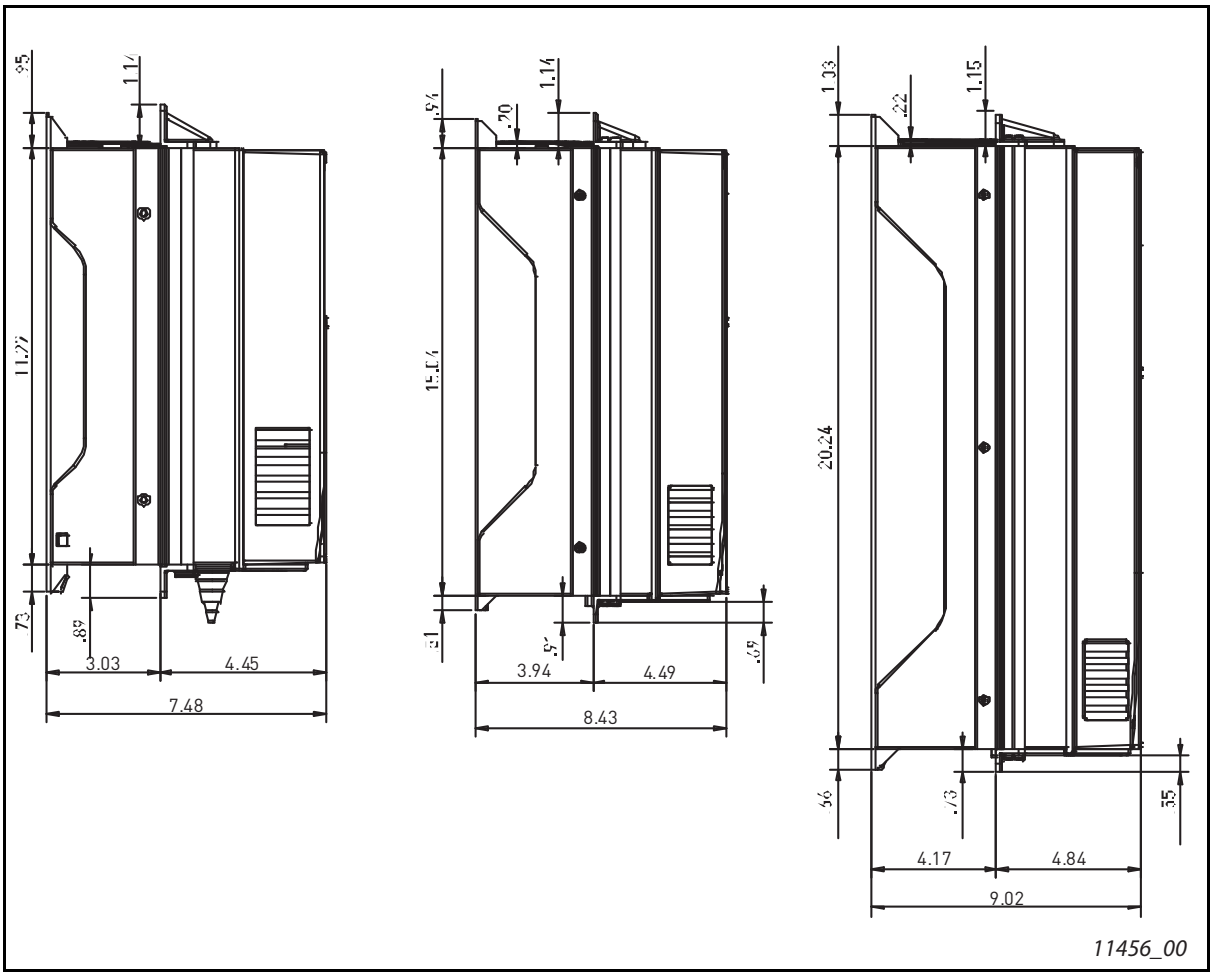

Figure 13. MR7 to MR9, flange mount, depth dimensions

3.2 Cooling

The drive produces heat in operation and is cooled by air circulated by a fan. Enough free space needs to be left around the drive to ensure sufficient air circulation and cooling. Different acts of maintenance also require a certain amount of free space.

Make sure that the temperature of the cooling air does not exceed the maximum ambient temperature of the converter.

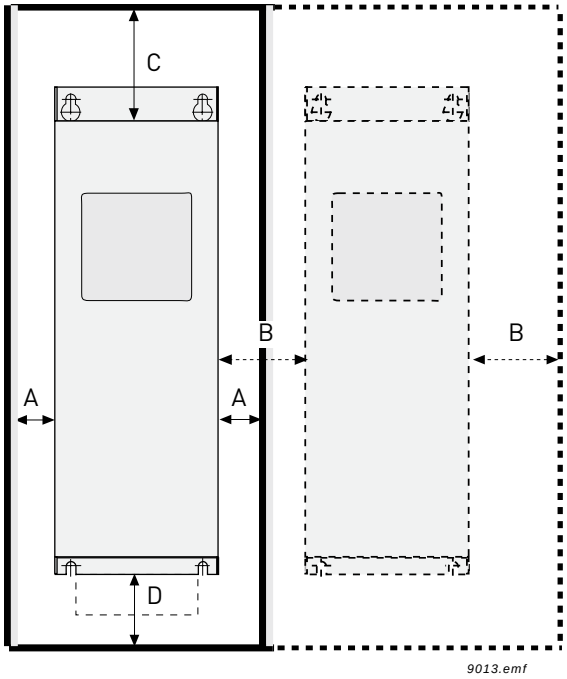

Min clearance [in], NEMA1				
Type	**A***	**B***	**C**	**D**
MR4	.79	.79	3.94	1.97
MR5	.79	.79	4.72	2.36
MR6	.79	.79	6.30	3.15
MR7	.79	.79	9.84	3.94
MR8	.79	.79	11.8	5.91
MR9	.79	.79	13.78	7.87

*. Min clearances A and B for drives with IP54 enclosure is 0 in.

Table 5. Min. clearances around drive

Figure 14. Installation space

A = clearance around the drive (see also B)
B = distance from one drive to another or distance to cabinet wall
C = free space above the drive
D = free space underneath the drive

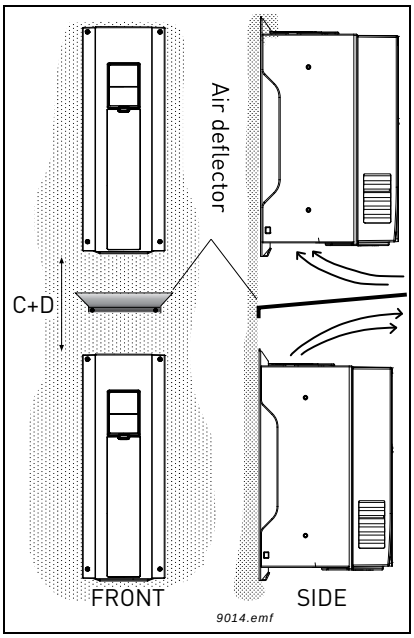

Note that if several units are mounted above one another the required free space equals C + D (see Figure 15.). Moreover, the outlet air used for cooling by the lower unit must be directed away from the air intake of the upper unit.

Figure 15. Installation space when drives are mounted on top of each other

Type	Cooling air required [cfm]
MR4	26
MR5	44
MR6	112
MR7	109
MR8	197
MR9	366

Table 6. Required cooling air

4. POWER CABLING

The mains cables are connected to terminals L1, L2 and L3 and the motor cables to terminals marked with U, V and W. See Table 7 for the cable recommmendations for different EMC levels.

Use cables with heat resistance of at least +158°F. The cables and the fuses must be dimensioned according to the drive nominal OUTPUT current which you can find on the rating plate.

Cable type	1st environment 2nd environment EMC levels According to EN61800-3 (2004)		
	Category C2	Category C3	Level T
Mains cable	1	1	1
Motor cable	3*	2	2
Control cable	4	4	4

Table 7. Cable types required to meet standards

1 = Power cable intended for fixed installation and the specific mains voltage. Shielded cable not required. (MCMK or similar recommended).
2 = Symmetrical power cable equipped with concentric protection wire and intended for the specific mains voltage. (MCMK or similar recommended). See Figure 16.
3 = Symmetrical power cable equipped with compact low-impedance shield and intended for the specific mains voltage. [MCCMK, EMCMK or similar recommended; Recommended cable transfer impedance (1...30MHz) max. 100mohm/m]. See Figure 16.
*360º grounding of the shield with cable glands in motor end needed for EMC level C2.
4 = Screened cable equipped with compact low-impedance shield (JAMAK, SAB/ÖZCuY-O or similar).

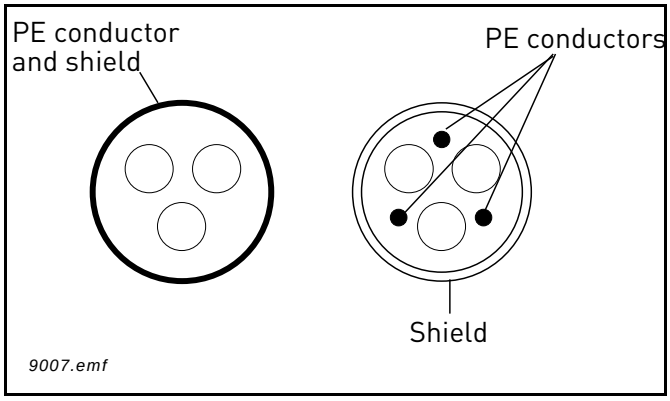

Figure 16.

NOTE: The EMC requirements are fulfilled at factory defaults of switching frequencies (all frames).
NOTE: If safety switch is connected the EMC protection shall be continuous over the whole cable installation.

4.1 UL standards on cabling

To meet the UL (Underwriters Laboratories) regulations, use a UL-approved copper cable with a minimum heat-resistance of +140/167°F. Use Class 1 wire only.

The units are suitable for use on a circuit capable of delivering not more than 100,000 rms symmetrical amperes, 600V maximum.

4.1.1 Cable dimensioning and selection

Table 8 shows the minimum dimensions of the Cu/Al-cables and the corresponding fuse sizes. Recommended fuse types are gG/gL.

These instructions apply only to cases with one motor and one cable connection from the drive to the motor. In any other case, ask the factory for more information.

4.1.1.1 Cable and fuse sizes, frames MR4 to MR6, North America

The recommended fuse types are gG/gL (IEC 60269-1) or class T (UL & CSA). The fuse voltage rating should be selected according to the supply network. The final selection should be made according to local regulations, cable installation conditions and cable specification. Bigger fuses than what is recommended below shall not be used.

Check that the fuse operating time is less than 0.4 seconds. Operating time depends on used fuse type and impedance of the supply circuit. Consult the factory about faster fuses. Honeywell offers recommendations also for high speed J (UL & CSA), aR (UL recognized, IEC 60269-4) and gS (IEC 60269-4) fuse ranges.

Frame	Type*	I_L [A]	Fuse (class T) [A]	Mains, motor and ground cable Cu	Terminal cable size	
					Main terminal	Ground terminal
MR4	C 0015	3.4	6	AWG14	AWG24-AWG10	AWG17-AWG10
	C 0020	4.8	6	AWG14	AWG24-AWG10	AWG17-AWG10
	C 0030	5.6	10	AWG14	AWG24-AWG10	AWG17-AWG10
	C 0050	8.0	10	AWG14	AWG24-AWG10	AWG17-AWG10
	C 0075	12.0	20	AWG14	AWG24-AWG10	AWG17-AWG10
MR5	C 0100	16.0	25	AWG10	AWG20-AWG5	AWG17-AWG8
	C 0150	23.0	30	AWG10	AWG20-AWG5	AWG17-AWG8
	C 0200	31.0	40	AWG8	AWG20-AWG5	AWG17-AWG8
MR6	C 0250	38.0	50	AWG4	AWG13-AWG0	AWG13-AWG2
	C 0300	46.0	60	AWG4	AWG13-AWG0	AWG13-AWG2
	C 0400**	61.0	80	AWG4	AWG13-AWG0	AWG13-AWG2

*. For more information on type code, see page 7.
**. The 460V models require 90-degree wire to meet UL regulations

Table 8. Cable and fuse sizes for Honeywell Smart VFD HVAC (MR4 to MR6)

The cable dimensioning is based on the criteria of the Underwriters' Laboratories UL508C:Cables must be PVC-isolated; Max ambient temperature +86°F, max temperature of cable surface +158°F; Use only cables with concentric copper shield; Max number of parallel cables is 9.
When using cables in parallel, **NOTE HOWEVER** that the requirements of both the cross-sectional area and the max number of cables must be observed.
For important information on the requirements of the grounding conductor, see standard Underwriters' Laboratories UL508C.

For the correction factors for each temperature, see the instructions of standard Underwriters' Laboratories UL508C.

4.1.1.2 Cable and fuse sizes, frames MR7 to MR9, North America

The recommended fuse types are gG/gL (IEC 60269-1) or class T (UL & CSA). The fuse voltage rating should be selected according to the supply network. The final selection should be made according to local regulations, cable installation conditions and cable specification. Bigger fuses than what is recommended below shall not be used.

Check that the fuse operating time is less than 0.4 seconds. Operating time depends on used fuse type and impedance of the supply circuit. Consult the factory about faster fuses. Honeywell offers recommendations also for high speed J (UL & CSA), aR (UL recognized, IEC 60269-4) and gS (IEC 60269-4) fuse ranges.

Frame	Type	I_L [A]	Fuse (class T) [A]	Mains, motor and ground cable Cu	Terminal cable size	
					Main terminal	Ground terminal
MR7	C 0500	72,0	100	AWG2	AWG9-AWG2/0	AWG9-AWG2/0
	C 0600	87,0	110	AWG1	AWG9-AWG2/0	AWG9-AWG2/0
	C 0750	105,0	150	AWG1/0	AWG9-AWG2/0	AWG9-AWG2/0
MR8	C 1000	140,0	200	AWG3/0	AWG1-350 kcmil	AWG1-350 kcmil
	C 1250	170,0	225	250 kcmil	AWG1-350 kcmil	AWG1-350 kcmil
	C 1500	205,0	250	350 kcmil	AWG1-350 kcmil	AWG1-350 kcmil
MR9	C 2000	261,0	350	2*250 kcmil	AWG1-350 kcmil	AWG1-350 kcmil
	C 2500	310,0	400	2*350 kcmil	AWG1-350 kcmil	AWG1-350 kcmil

Table 9. Cable and fuse sizes for Honeywell Smart VFD HVAC (MR7 to MR9)

The cable dimensioning is based on the criteria of the Underwriters' Laboratories UL508C:Cables must be PVC-isolated; Max ambient temperature +86°F, max temperature of cable surface +158°F; Use only cables with concentric copper shield; Max number of parallel cables is 9.
When using cables in parallel, **NOTE HOWEVER** that the requirements of both the cross-sectional area and the max number of cables must be observed.
For important information on the requirements of the grounding conductor, see standard Underwriters' Laboratories UL508C.

For the correction factors for each temperature, see the instructions of standard Underwriters' Laboratories UL508C.

4.2 Brake resistor cables

The SmartVFD HVAC is equipped with terminals for an optional external brake resistor. These terminals are marked with R+ and R- (MR4-MR6) or DC+/R+ and R- (MR7 and bigger).

4.3 Control cables

For information on control cables see chapter Control unit cabling.

4.4 Cable installation

- Before starting, check that none of the components of the drive is live. Read carefully the warnings in chapter 1.
- Place the motor cables sufficiently far from other cables
- Avoid placing the motor cables in long parallel lines with other cables.
- If the motor cables run in parallel with other cables note the minimum distances between the motor cables and other cables given in table below.

Distance between cables, [in]	Shielded cable, [ft]
11.8	≤ 164
39.4	≤ 656

- The given distances also apply between the motor cables and signal cables of other systems.
- The maximum lengths of motor cables are 328 ft. (MR4), 492 ft. (MR5 and MR6) and 656 ft. (MR7 to MR9).
- The motor cables should cross other cables at an angle of 90 degrees.
- If cable insulation checks are needed, see chapter Cable and motor insulation checks.

Start the cable installation according to the instructions below:

4.4.1 Frames MR4 to MR7

1	Strip the motor and mains cables as advised below.

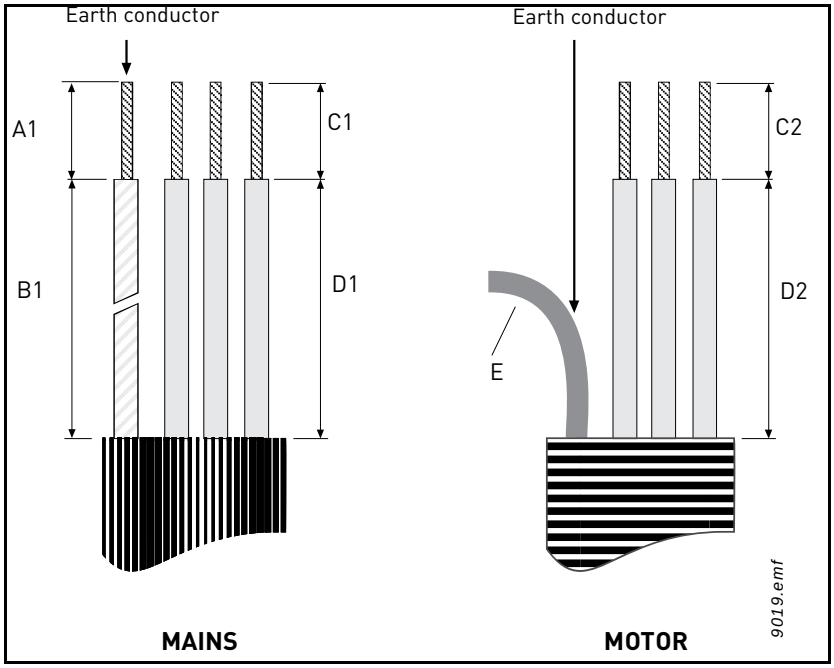

Figure 17. Stripping of cables

Frame	A1	B1	C1	D1	C2	D2	E
MR4	.59	1.38	.39	.79	.28	1.38	Leave as short as possible
MR5	.79	1.57	.39	1.18	.39	1.57	
MR6	.79	3.54	.59	2.36	.59	2.36	
MR7	.79	3.15	.79	3.15	.79	3.15	

Table 10. Cables stripping lengths [in]

2	Open the cover of the drive.

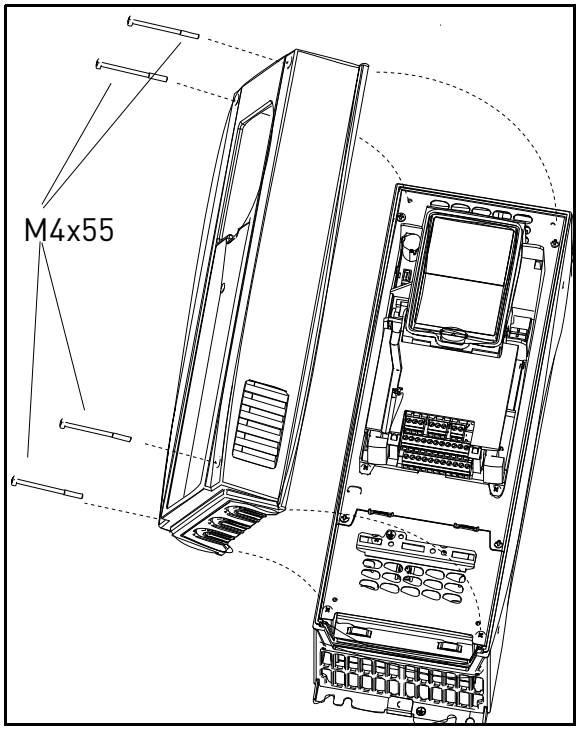

Figure 18.

3	**Remove the screws** of the cable protection plate. Do not open the cover of the power unit!

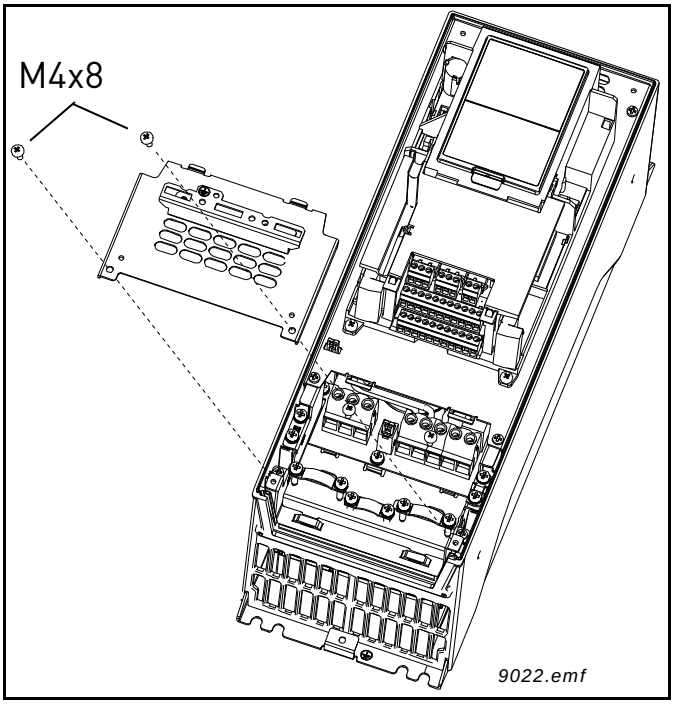

Figure 19.

4	Insert the cable grommets (included in the delivery) in the openings of the cable entry plate (included) as shown in the picture.

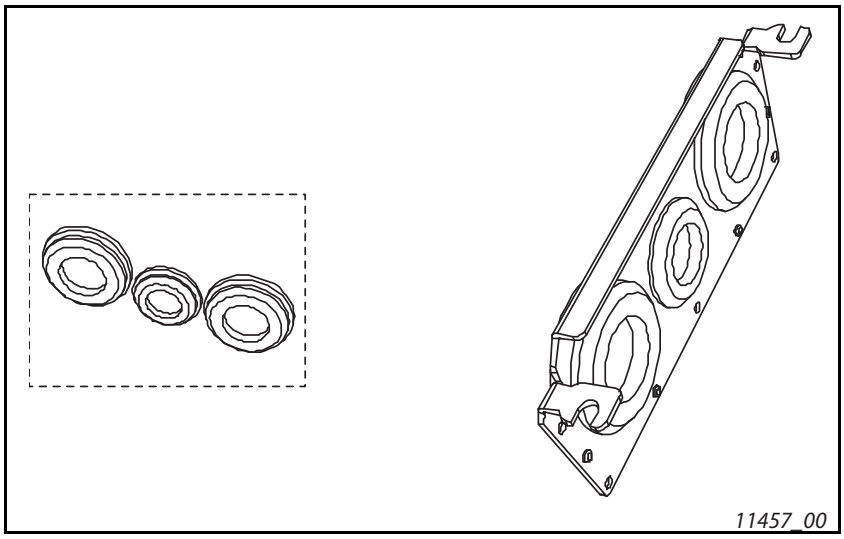

Figure 20.

5	Insert the cables - supply cable, motor cable and optional brake cable - in the openings of the cable entry plate. Then cut the rubber grommets open to slide the cables through. Do not cut the grommet openings wider than what is necessary for the cables you are using. **IMPORTANT NOTE FOR NEMA12 INSTALLATION:** To meet the requirements of the enclosure class NEMA12, the connection between the grommet and the cable must be tight. Therefore, lead the first bit of the cable out of the grommet straight before letting it bend. If this is not possible, the tightness of the connection must be ensured with insulation tape or a cable tie.

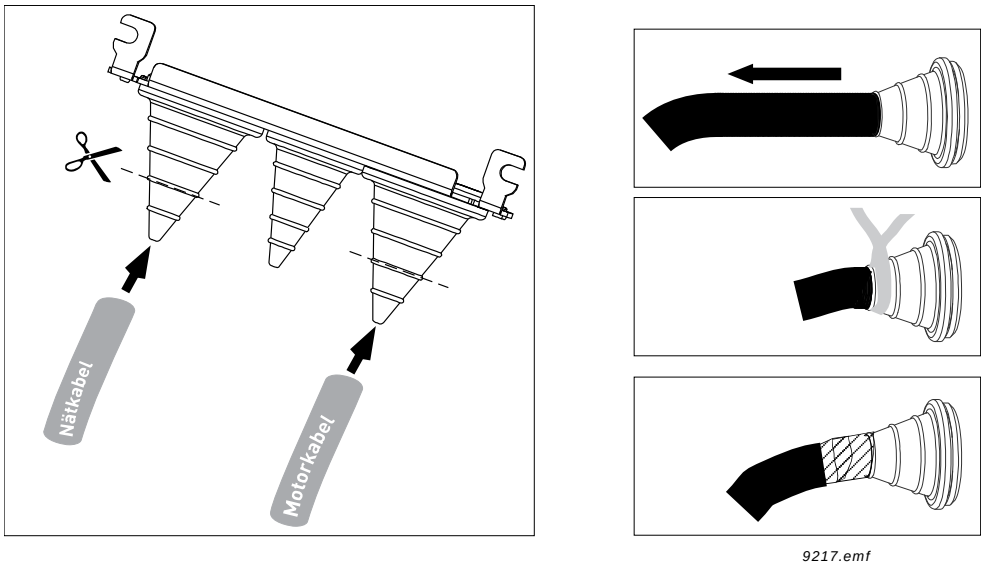

Figure 21.

6	Detach the cable clamps and the grounding clamps (Figure 22) and place the cable entry plate with the cables in the groove on the drive frame (Figure 23).

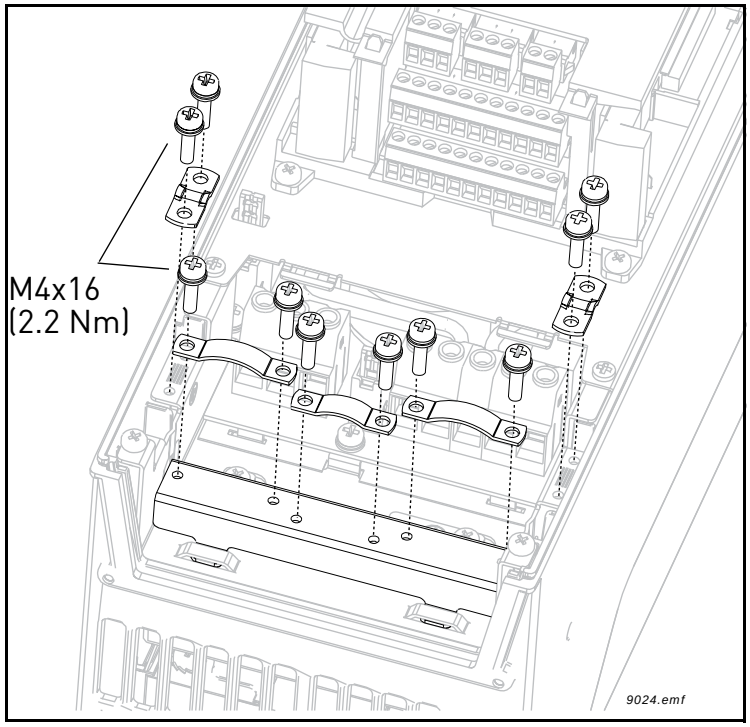

Figure 22.

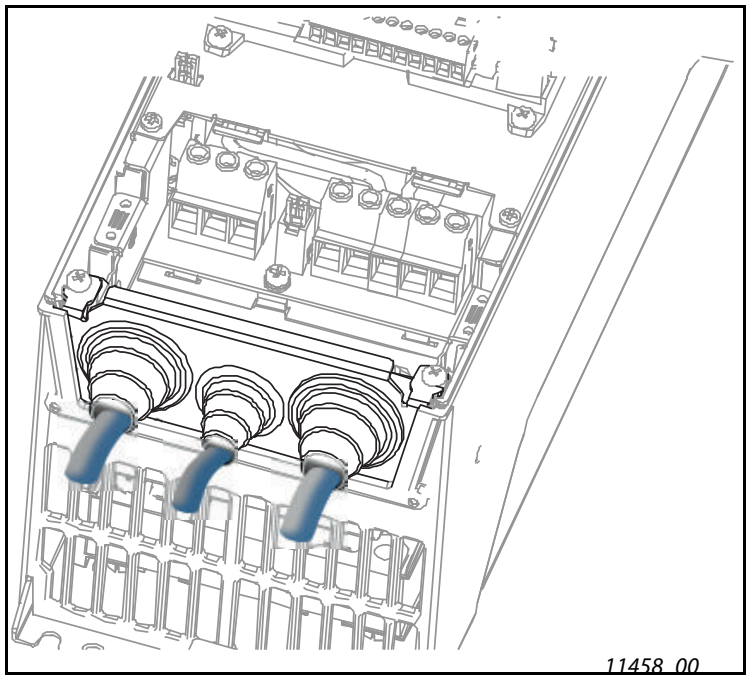

Figure 23.

7	Connect the stripped cables (see Figure 17 and Table 10) as shown in Figure 24. • Expose the shield of all three cables in order to make a 360-degree connection with the cable clamp (1). • Connect the (phase) conductors of the supply, brake and motor cables into their respective terminals (2). • Form the rest of the cable shield of all three cables into “pigtails” and make a grounding connection with a clamp as shown in Figure 24 (3). Make the pigtails **just long enough** to reach and be fixed to the terminal - not longer.

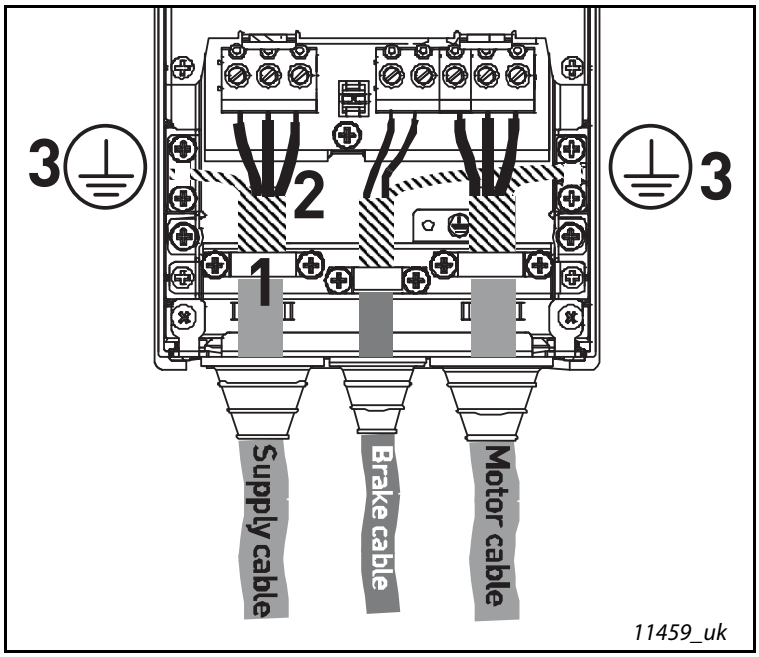

Figure 24.

Tightening torques of cable terminals:

Frame	Type	Tightening torque [Nm]/[lb-in.] Power and motor terminals		Tightening torque [Nm]/[lb-in.] EMC grounding clamps		Tightening torque, [Nm]/[lb-in.] Grounding terminals	
		[Nm]	lb-in.	[Nm]	lb-in.	[Nm]	lb-in.
MR4	C 0015—C 0075	0.5—0.6	4.5—5.3	1.5	13.3	2.0	17.7
MR5	C 0100—C 0200	1.2—1.5	10.6—13.3	1.5	13.3	2.0	17.7
MR6	C 0250—C 0400	10	88.5	1.5	13.3	2.0	17.7
MR7	C 0500—C 0750	8/15*	70.8/132.8*	1.5	13.3	8/15*	70.8/132.8*

*. Cable clamping (Ouneva Pressure Terminal Connector)

Table 11. Tightening torques of terminals

8	Check the connection of the grounding cable to the motor and the drive terminals marked with ⏚ . **NOTE**: Two protective conductors are required according to standard EN61800-5-1. See Figure 25 and chapter Grounding and ground fault protection. Use an M5 size screw and tighten it to 2.0 Nm (17.7 lb-in.).

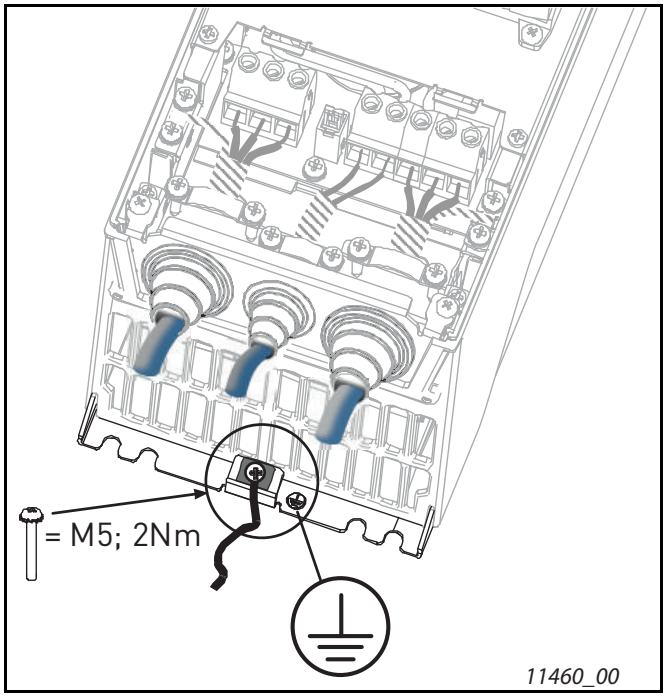

Figure 25. Additional protective grounding connector

9	Re-mount the cable protection plate (Figure 26) and the cover of the drive.

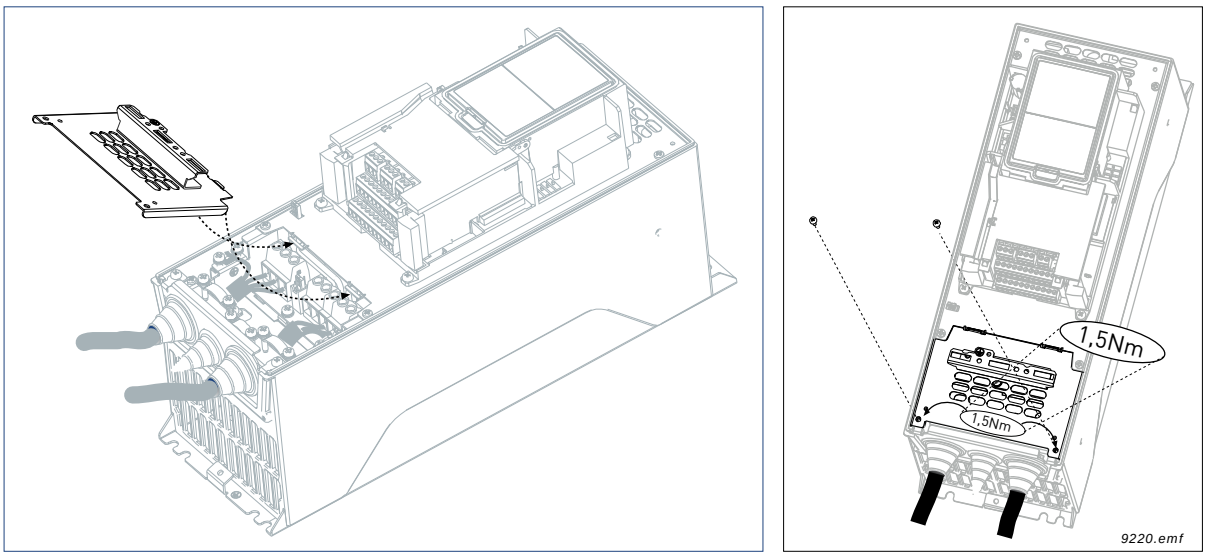

Figure 26. Re-mounting of cover components

4.4.2 Frames MR8 and MR9

1	Strip the motor and mains cables as advised below.

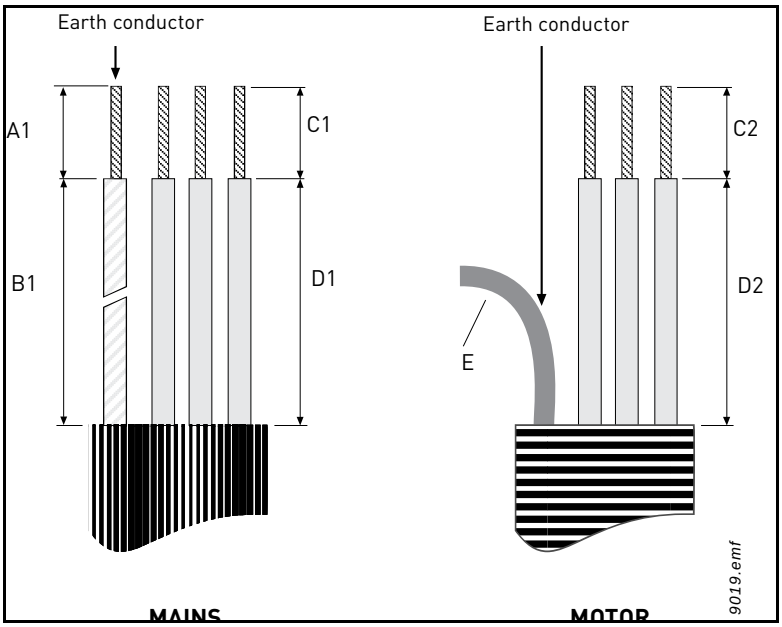

Figure 27. Stripping of cables

Frame	A1	B1	C1	D1	C2	D2	E
MR8	1.57	7.09	.98	11.81	.98	11.81	Leave as short as possible
MR9	1.57	7.09	.98	11.81	.98	11.81	

Table 12. Cables stripping lengths [in]

2	**MR9 only:** Remove the main cover of the AC drive.

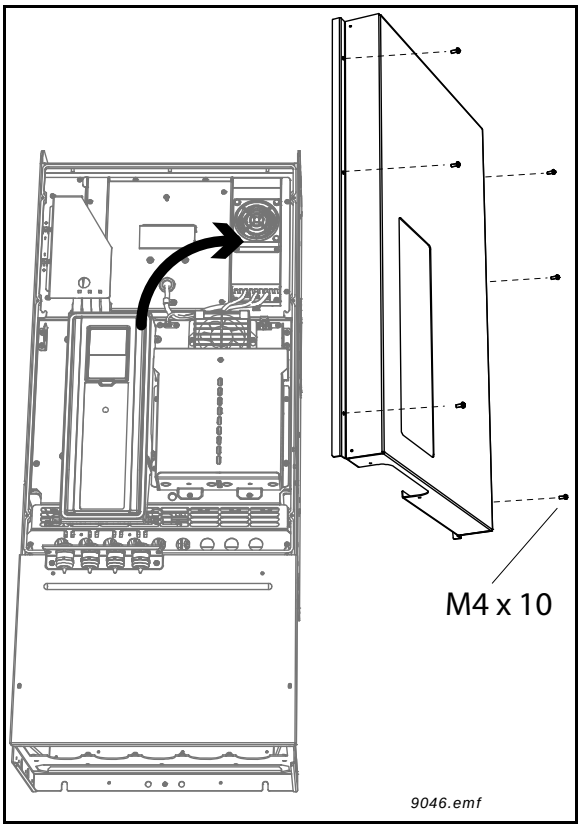

Figure 28.

3	Remove the cable cover (1) and the cable fitting plate (2).

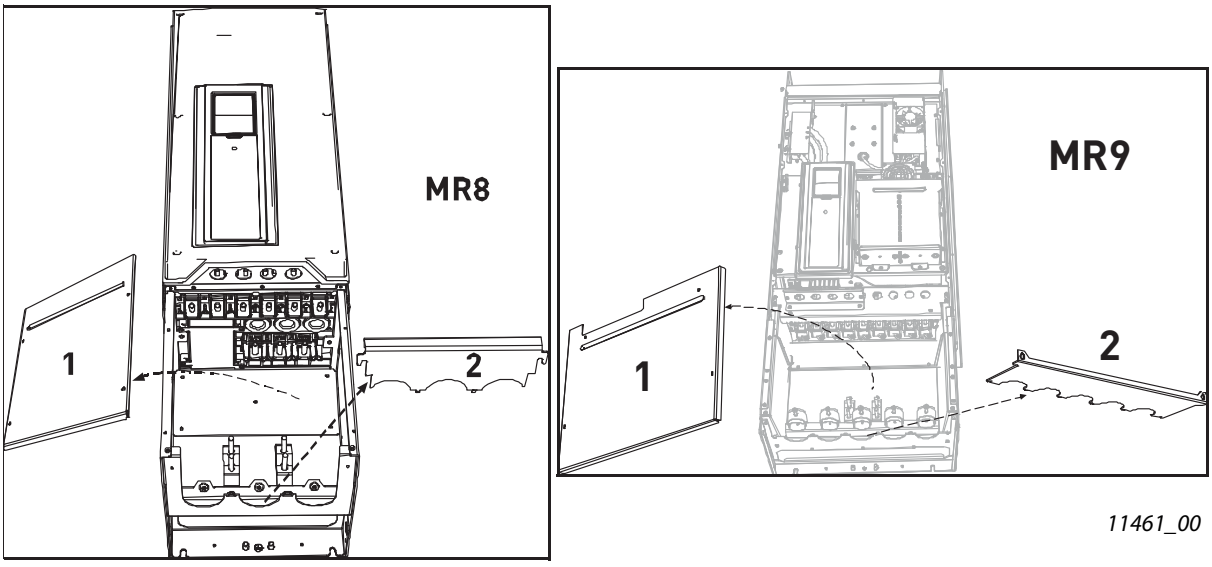

Figure 29.

4	**MR9 only:** Loosen the screws and remove the sealing plate.

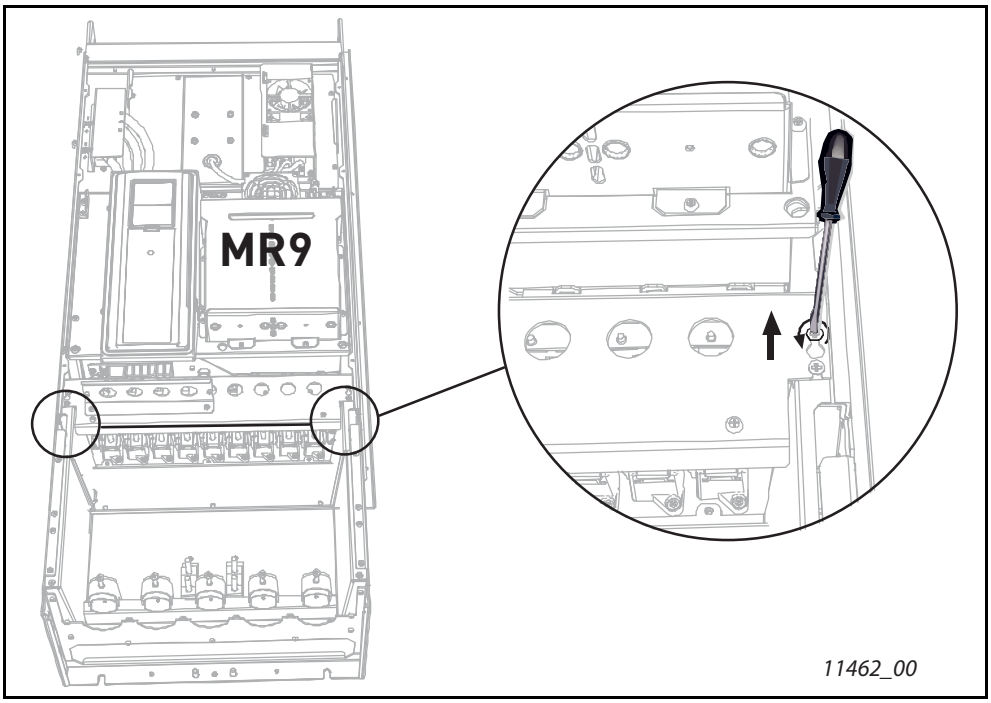

Figure 30.

5	Locate the terminals. **OBSERVE** the exceptional placement of motor cable terminals in MR8!

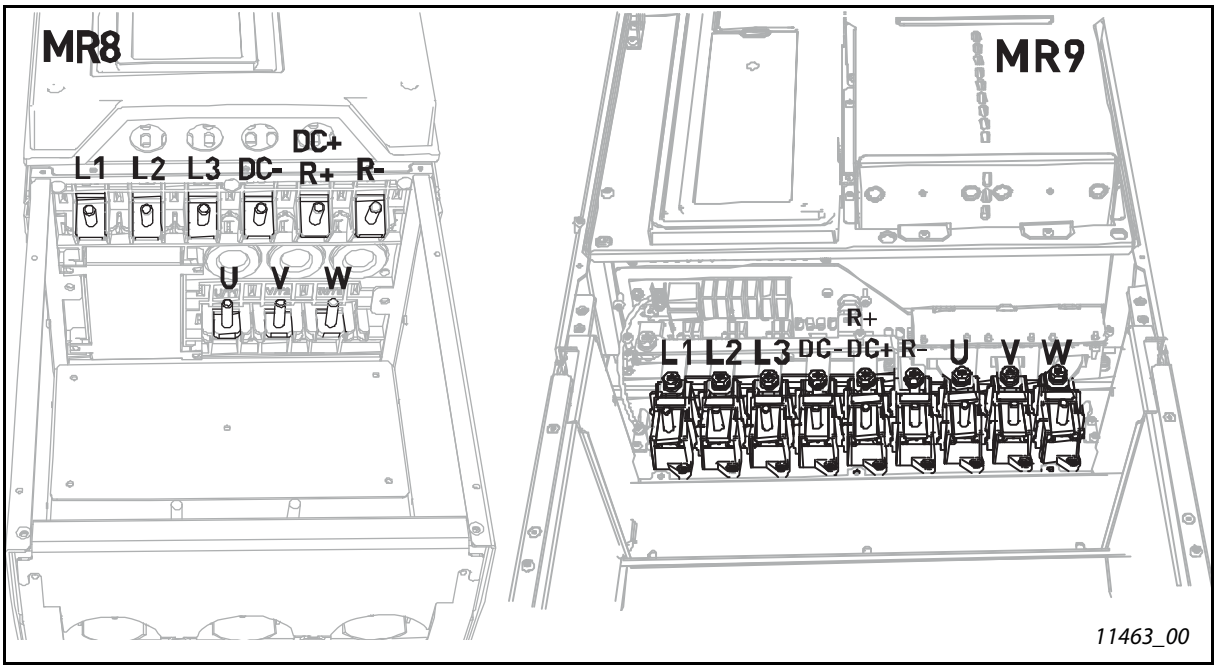

Figure 31.

6	Cut the rubber grommets open to slide the cables through. Should the grommets fold in while inserting the cable, just draw the cable back a bit to straighten the grommets up. Do not cut the grommet openings wider than what is necessary for the cables you are using.

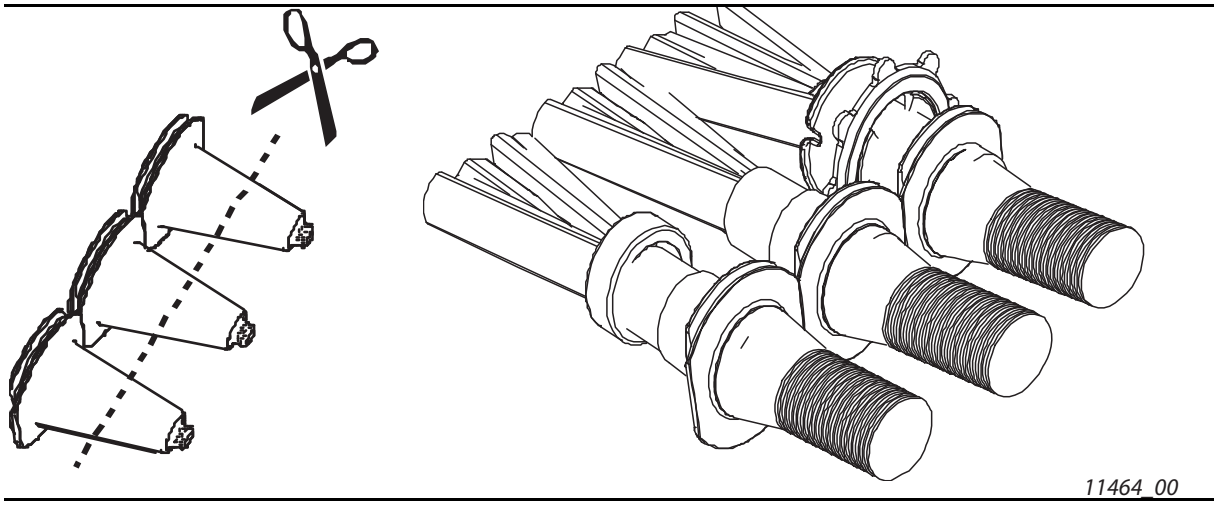

Figure 32.

7	Place the grommet with the cable so that the frame end plate fits in the groove on the grommet, see Figure 33. To meet the requirements of the enclosure class NEMA12, the connection between the grommet and the cable must be tight. Therefore, lead the first bit of the cable out of the grommet **straight** before letting it bend. If this is not possible, the tightness of the connection must be ensured with insulation tape or a cable tie. As an example,see Figure 21.

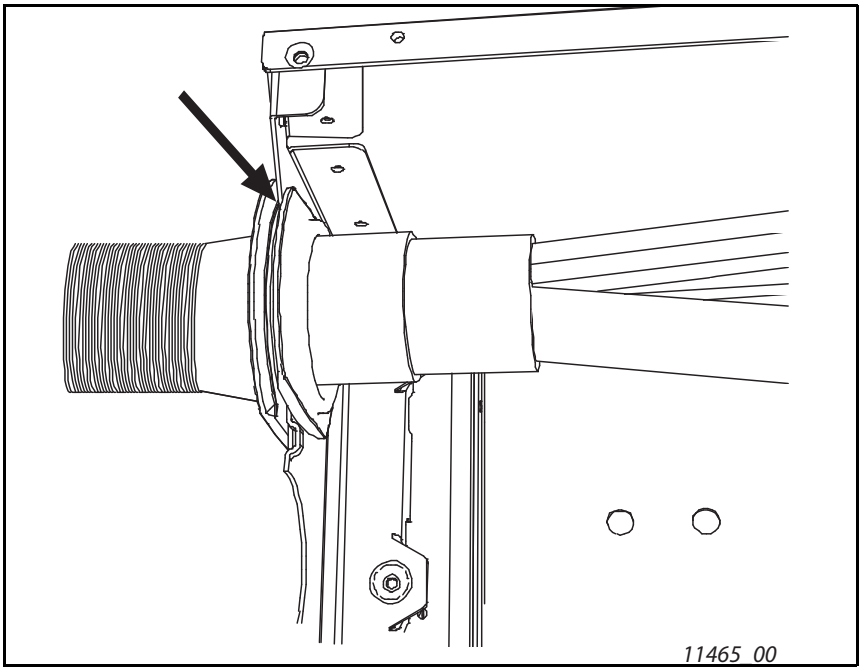

Figure 33.

8	If you use thick cables insert the cable separators in between the terminals in order to avoid contact between the cables.

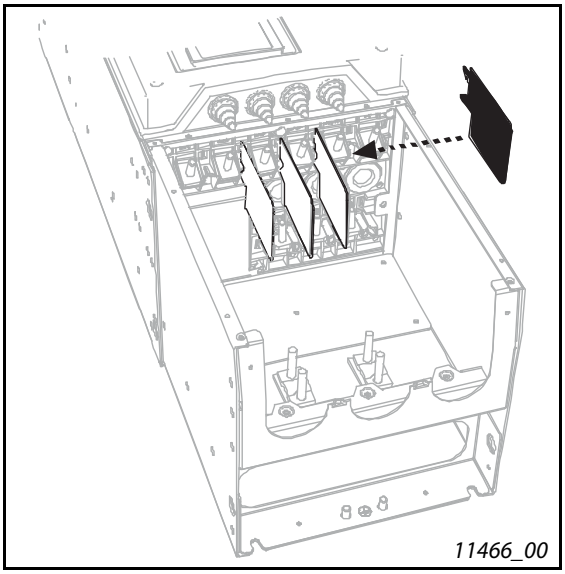

Figure 34.

9	Connect the cables stripped as shown in Figure 27. • Connect the (phase) conductors of the supply, brake and motor cables into their respective terminals (a). • Form the rest of the cable shield of all cables into “pigtails” and make a grounding connection as shown in Figure 35 (b) using the clamp from the *Accessories bag*. • Note also correct position of the ferrite holder (c) AFTER the cable stripping (in MR8 and EMC class C2 only). • Note: If you use several cables on one connector observe the position of cable lugs on top of each other. See Figure 36 below.

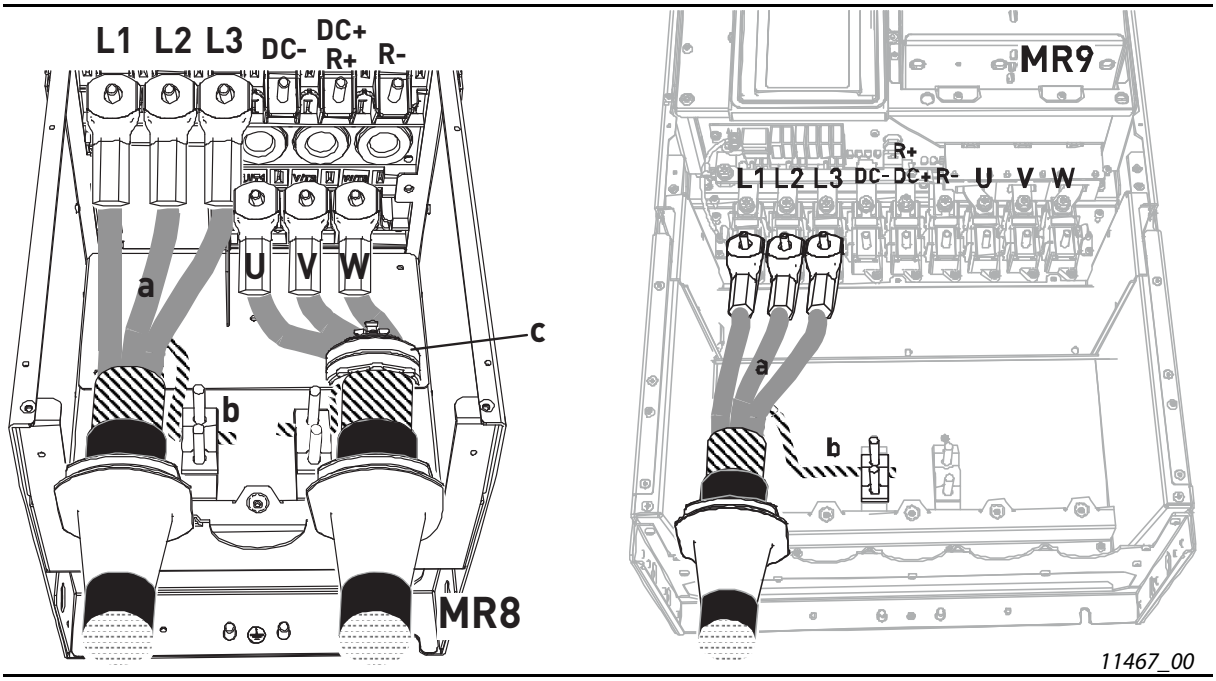

Figure 35.

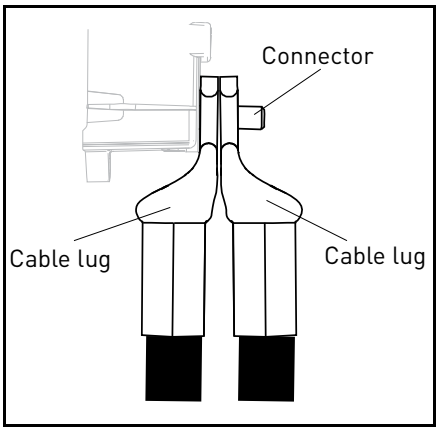

Figure 36. Placing two cable lugs on top of each other

Tightening torques of cable terminals:

Frame	Type	Tightening torque [Nm]/[lb-in.] Power and motor terminals		Tightening torque [Nm]/[lb-in.] EMC grounding clamps		Tightening torque, [Nm]/[lb-in.] Grounding terminals	
		[Nm]	lb-in.	[Nm]	lb-in.	[Nm]	lb-in.
MR8	C 1000—C 1500	20/40*	177/354*	1.5	13.3	20	177
MR9	C 2000—C 2500	20/40*	177/354*	1.5	13.3	20	177

*. Cable clamping (Ouneva Pressure Terminal Connector)

Table 13. Tightening torques of terminals

10	Expose the shield of all three cables in order to make a 360-degree connection with the cable clamp.

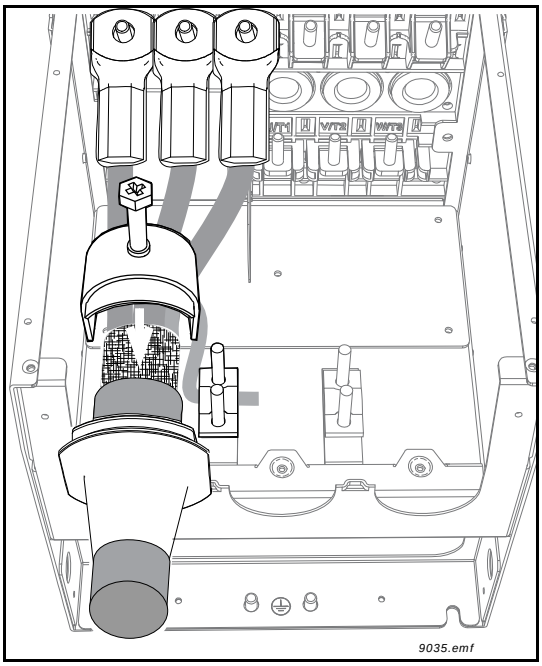

Figure 37.

11	Re-attach first the cable fitting plate and then the cable cover.

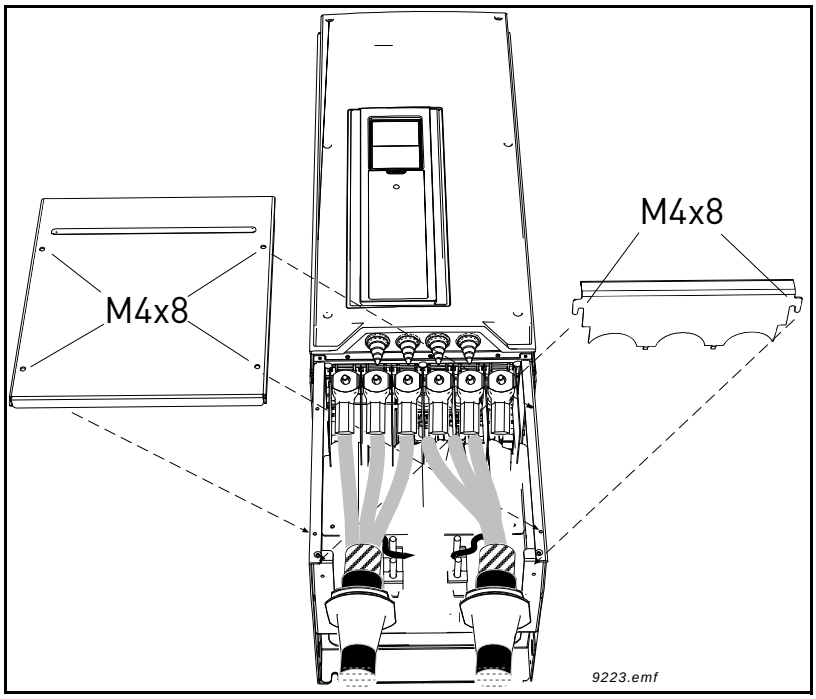

Figure 38.

12	**MR9 only:** Now re-mount the main cover (unless you want to make the control connections first).

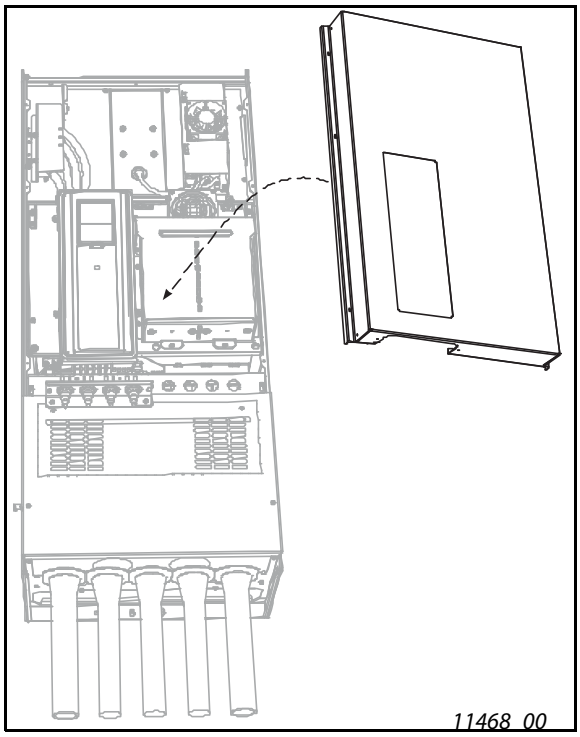

Figure 39.

13	Check the connection of the earth cable to the motor and the AC drive terminals marked with ⏚ . **NOTE**: Two protective conductors are required according to standard EN61800-5-1. See chapter Grounding and ground fault protection. Connect the protective conductor using a cable shoe and an M8 screw (included in the *Accessories bag*) on **either** of the screw connectors as advised in Figure 40.

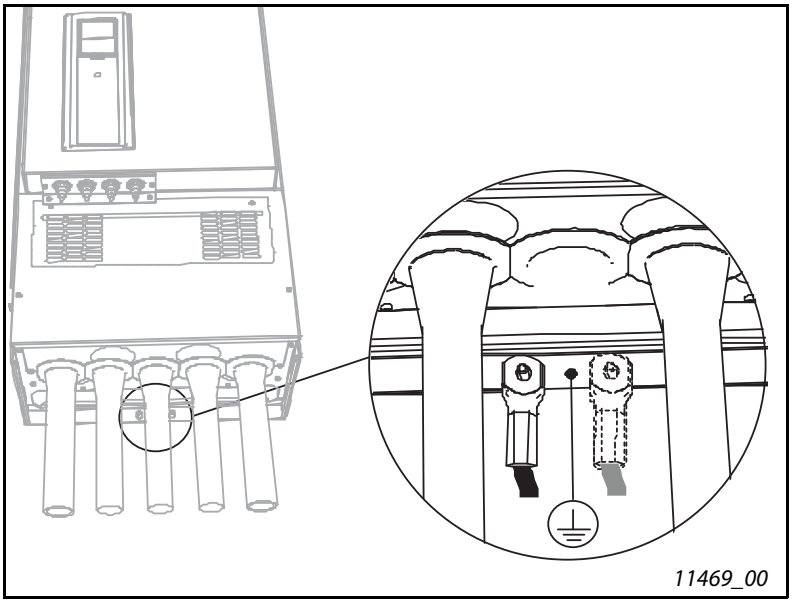

Figure 40.

4.4.3 Cable and motor insulation checks

1. Motor cable insulation checks
   Disconnect the motor cable from terminals U, V and W of the drive and from the motor. Measure the insulation resistance of the motor cable between each phase conductor as well as between each phase conductor and the protective ground conductor. The insulation resistance must be >1MΩ at ambient temperature of 68°F.
2. Mains cable insulation checks
   Disconnect the mains cable from terminals L1, L2 and L3 of the drive and from the mains. Measure the insulation resistance of the mains cable between each phase conductor as well as between each phase conductor and the protective ground conductor. The insulation resistance must be >1MΩ at ambient temperature of 68°F.
3. Motor insulation checks
   Disconnect the motor cable from the motor and open the bridging connections in the motor connection box. Measure the insulation resistance of each motor winding. The measurement voltage must equal at least the motor nominal voltage but not exceed 1000 V. The insulation resistance must be >1MΩ at ambient temperature of 68°F.

4.5 Installation in corner-grounded network

Corner grounding is allowed for the drive types rating from 72 A to 310 A at 380...480 V supply and from 75 A to 310 A at 208...240 V supply.

In these circumstances the EMC protection class must be changed to level C4 following the instructions in Chapter 5.2 of this manual.

Corner grounding is not allowed for the drive types with rating from 3.4 A to 61 A at 380...480 V supply and 3.7 A to 62 A with 208...240 V supply.

5. COMMISSIONING

Before commissioning, note the following directions and warnings:

	Internal components and circuit boards of the drive (except for the galvanically isolated I/O terminals) are live when it is connected to mains potential. **Coming into contact with this voltage is extremely dangerous and may cause death or severe injury.**
	The motor terminals **U**, **V**, **W** and the brake resistor terminals **B-/B+ are live** when the drive is connected to mains, **even if the motor is not running**.
	The control I/O-terminals are isolated from the mains potential. However, the **relay outputs and other I/O-terminals may have a dangerous control voltage** present even when the drive is disconnected from mains.
	Do not make any connections to or from the drive when it is connected to the mains.
	After disconnecting the drive from the mains, **wait** until the fan stops and the indicators on the keypad go out (if no keypad is attached see the indicators on the cover). Wait 5 more minutes before doing any work on the connections of the drive. Do not open the cover before this time has expired. After expiration of this time, use a measuring equipment to absolutely ensure that no voltage is present. **Always ensure abscence of voltage before electrical work!**
	Before connecting the frequency converter to mains make sure that the front and cable covers of the drive are closed.

5.1 Commissioning of the SmartVFD HVAC

1	Read carefully the safety instructions in Chapter 1 and above and follow them.
2	After the installation, make sure that: • both the drive and the motor are grounded. • the mains and motor cables comply with the requirements given in chapter 4.1.1. • the control cables are located as far as possible from the power cables, see chapter 4.4. • the shields of the shielded cables are connected to protective ground marked with ⏚. • check the tightening torques of all terminals • the wires do not touch the electrical components of the drive. • the common inputs of digital input groups are connected to +24V or ground of the I/O terminal or the external supply.
3	Check the quality and quantity of cooling air (chapter 3.2 and Table 6).
4	Check the inside of the drive for condensation.
5	**Check that all Start/Stop switches connected to the I/O terminals are in Stop-position.**
6	Before connecting the AC drive to mains: • check mounting and condition of all fuses and other protective devices
7	Run the Startup Wizard (see the Application Manual).

5.2 Changing EMC protection class

If your supply network is an IT (impedance-grounded) system but your AC drive is EMC-protected according to class C2 you need to modify the EMC protection of the AC drive to EMC-level T. This is done by removing the built-in EMC jumpers with a simple procedure described below:

⚠	Warning! Do not perform any modifications on the drive when it is connected to mains.

5.2.1 Frames MR4 to MR6

1	Remove the main cover of the drive (see pages 28 and 34) and locate the jumpers connecting the built-in RFI-filters to ground. See Figure 41. and Figure 42.

NOTE: The locations of the EMC-jumpers have changed in frames MR5 and MR6. Figure 41. shows the old locations and Figure 42. the new locations in frames MR5 and MR6.

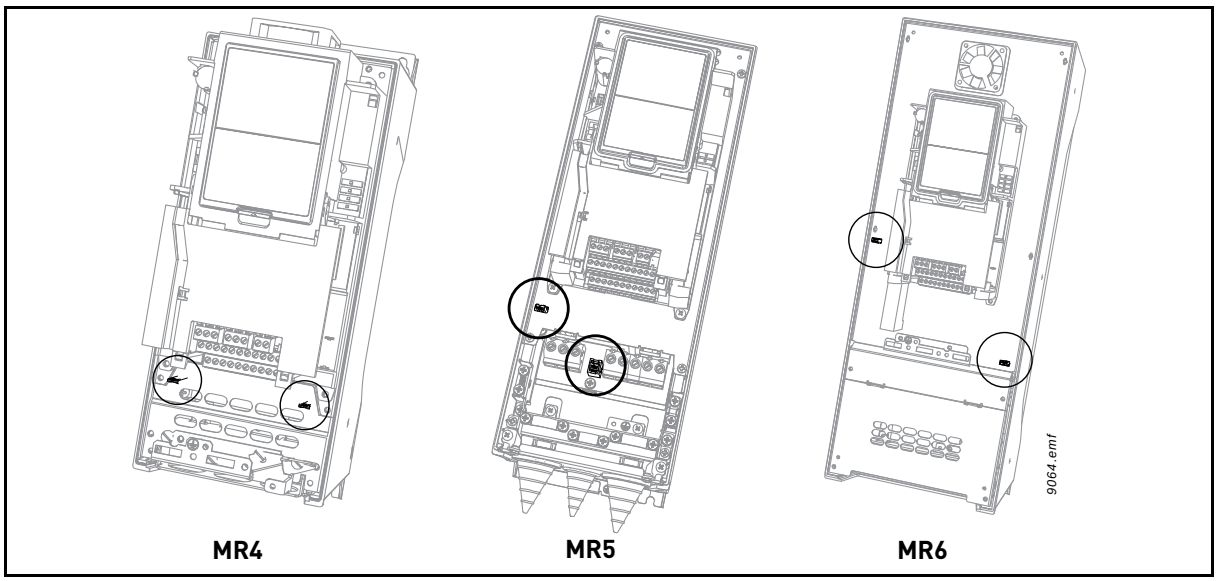

Figure 41. Current locations of the EMC-jumpers in frame MR4, old locations in frames MR5 and MR6

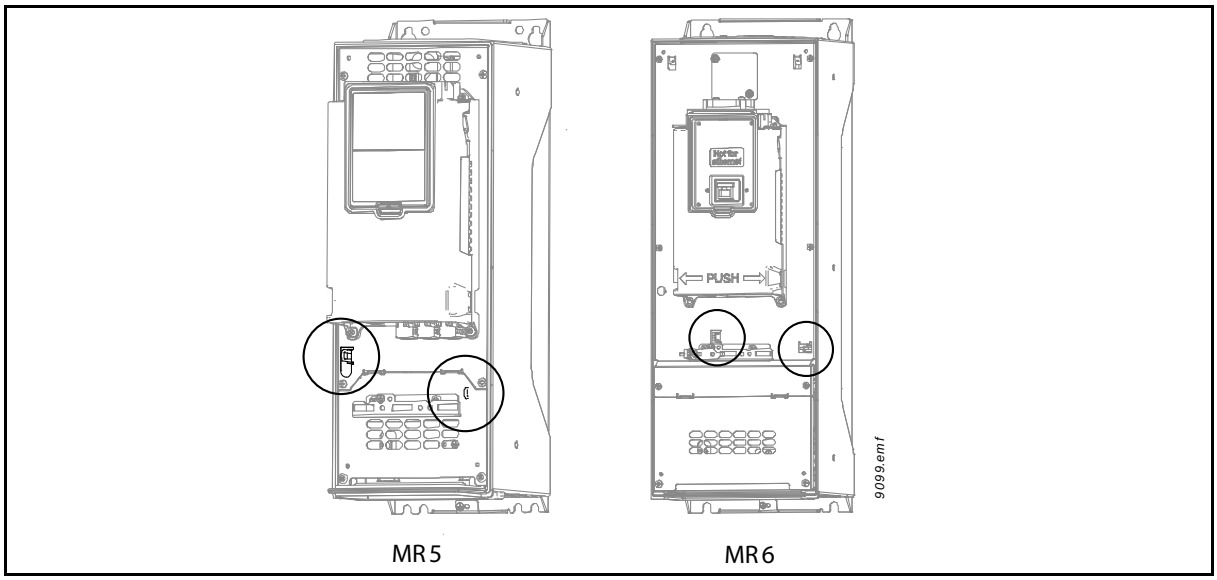

Figure 42.Current locations of the EMC-jumpers in frames MR5 and MR6

2	Disconnect the RFI-filters from ground by removing the EMC-jumpers using long-nose pliers or similar. See Figure 43.

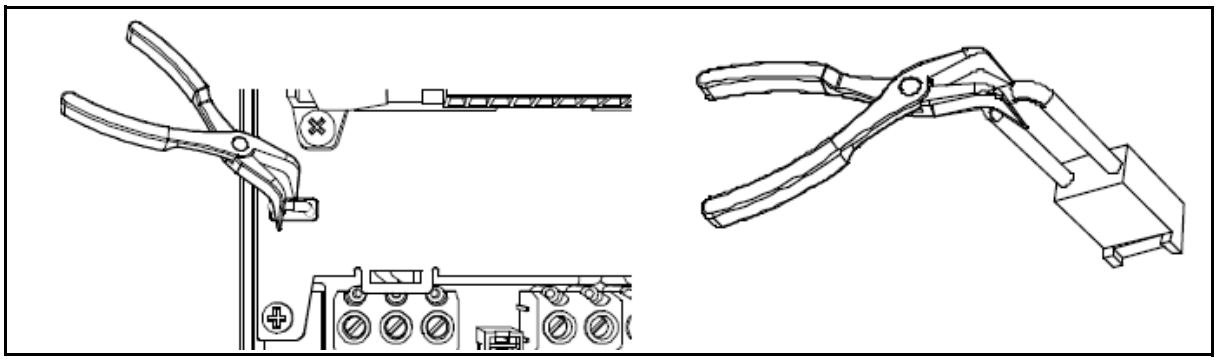

Figure 43. Removing the jumper, MR5 as example

5.2.2 Frames MR7 and MR8

Follow the procedure described above to modify the EMC protection of the drive of frames MR7 and MR8 to EMC-level C4.

1	Remove the main cover of the drive and locate the jumper. **MR8 only:** Push down the grounding arm. See Figure 44.

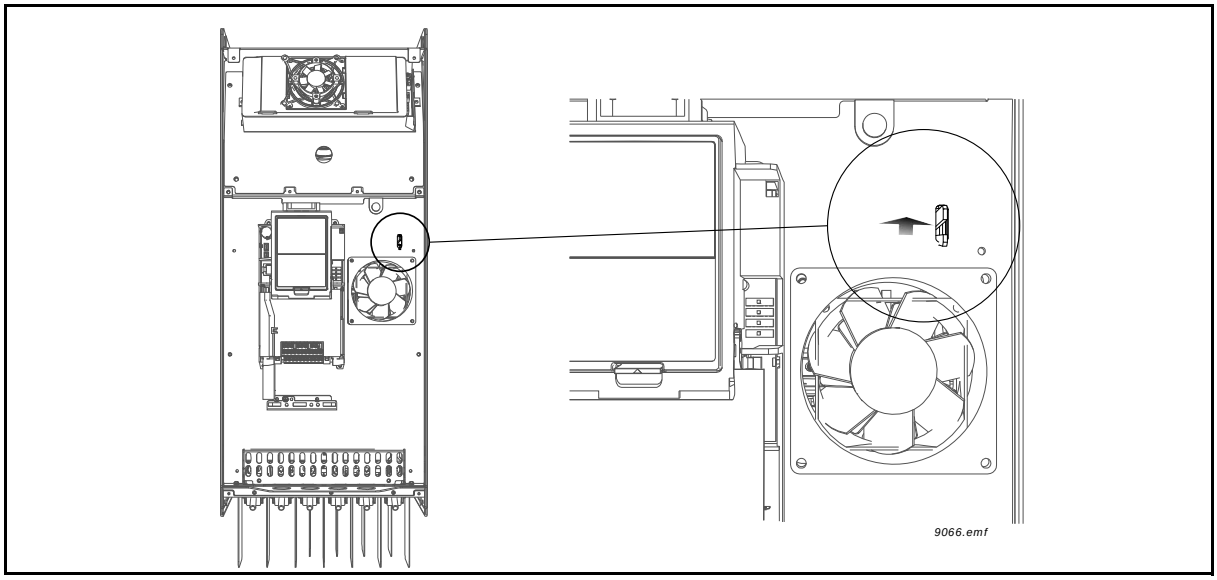

Figure 44.

2	**MR7 and MR8:** Locate the EMC box under the cover. Remove the screws of the box cover to expose the EMC-jumper. Detach the jumper and re-fix the box cover.

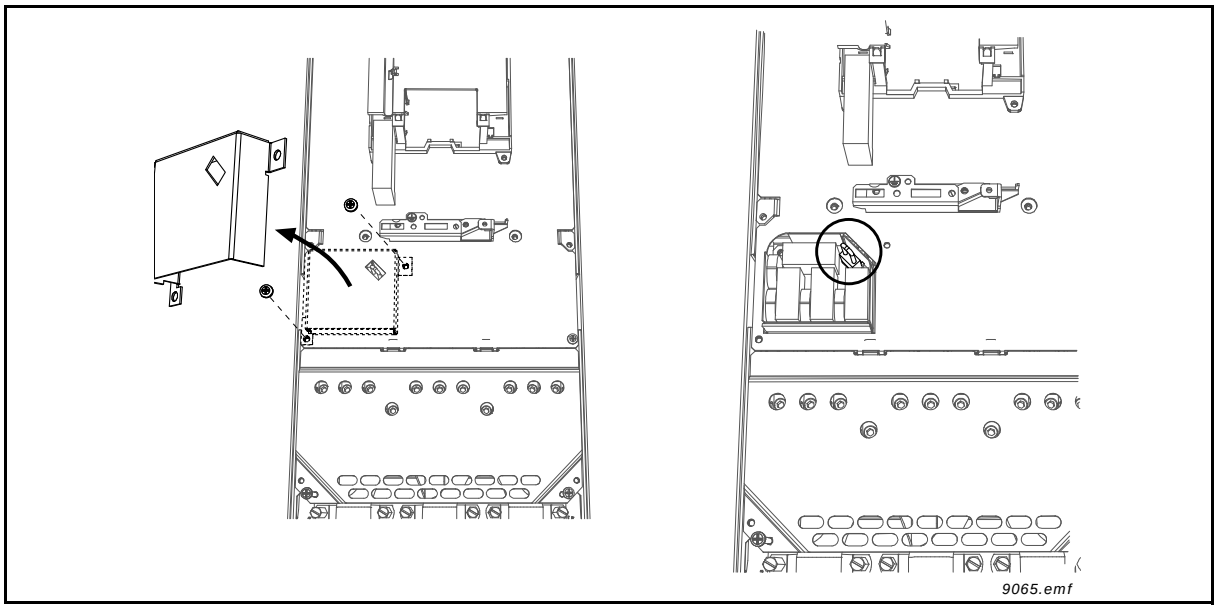

Figure 45.

3	**MR7 only:** locate the DC grounding busbar between connectors R- and U and detach the busbar from the frame by undoing the M4 screw.

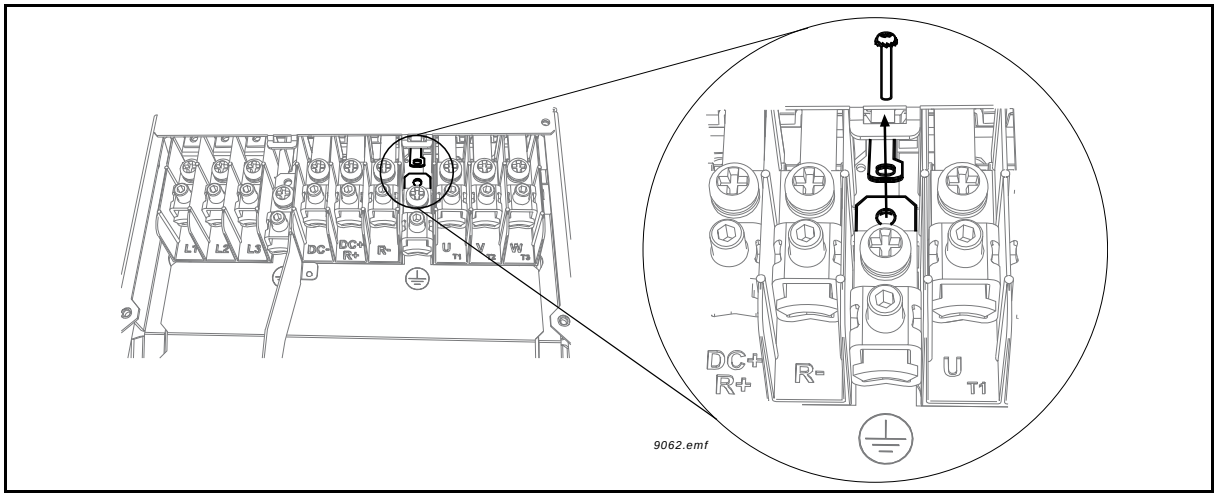

Figure 46. MR7: Detaching the DC grounding busbar from frame

5.2.3 Frame MR9

Follow the procedure described above to modify the EMC protection of the AC drive of frame MR9 to EMC-level **T**.

1	Find the *Molex* connector in the accessories bag. Remove the main cover of the AC drive and locate the place for the connector next to the fan. Push the Molex connector in its place. See Figure 47.

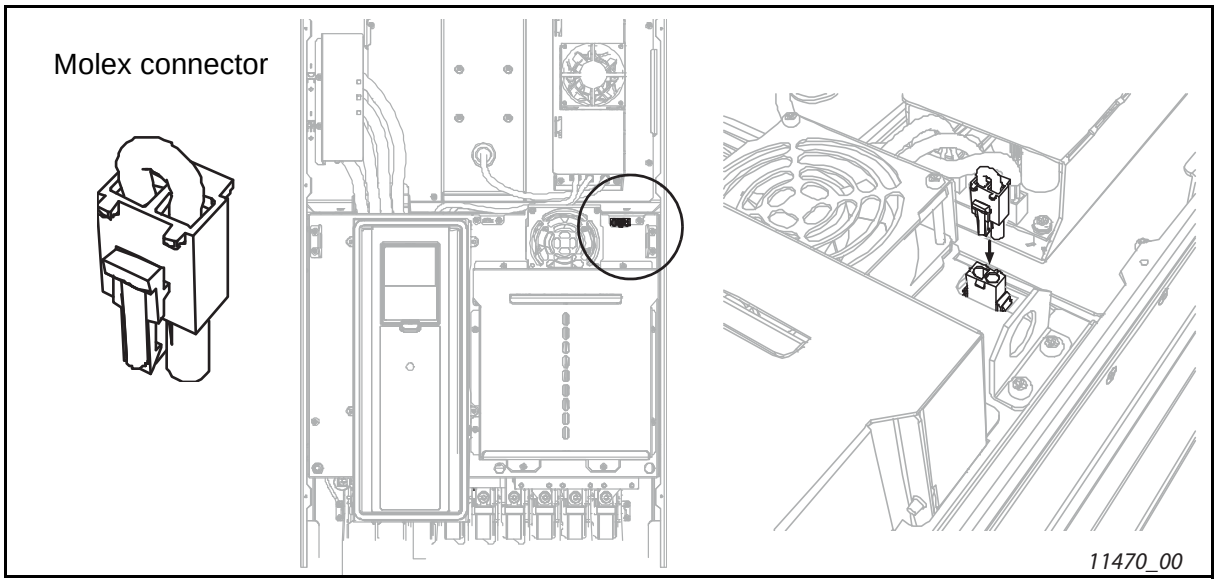

Figure 47.

2	Further remove the extension box cover (1), the touch shield (2) the I/O plate (4) with I/O grommet plate (3). Locate the EMC jumper on the EMC board (see magnification below) and remove it.

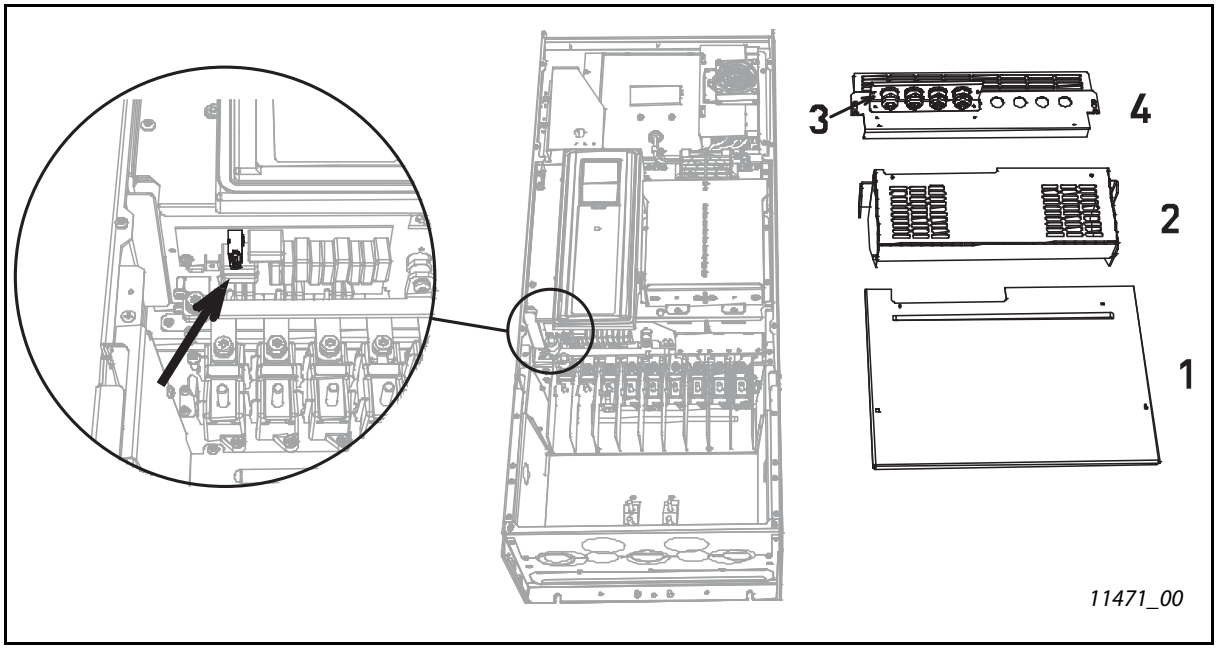

Figure 48.

	CAUTION! Before connecting the AC drive to mains make sure that the EMC protection class settings of the drive are appropriately made.
	NOTE! After having performed the change write *'EMC level modified'* on the sticker included with the drive delivery (see below) and note the date. Unless already done, attach the sticker close to the name plate of the drive.

6. CONTROL UNIT

The control unit of the drive consists of the control board and additional boards (option boards) connected to the slot connectors of the control board.

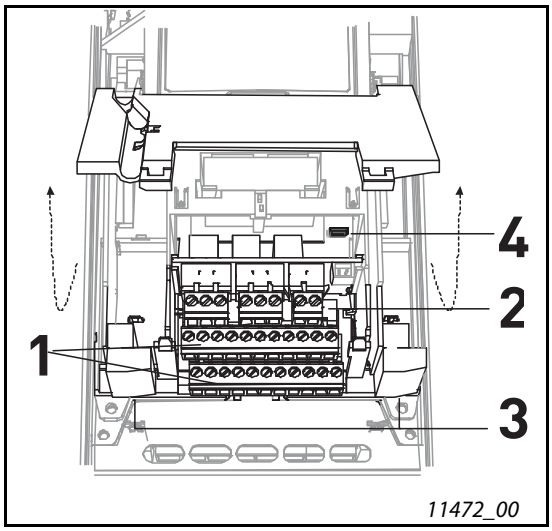

Locations of essential control unit components:

1 = Control terminals of the control board

2 = Terminals of relay board; **NOTE:** There are two different compilations of relay boards available. See section 6.1.

3 = Optional boards

4 = Disconnecting jumper for digital inputs, see chapter 6.1.2.2

Figure 49. Location of control unit components

When delivered from the factory, the control unit of the drive contains the standard controlling interface - the control terminals of the control board and the relay board - unless otherwise specifically ordered. On the next pages you will find the arrangement of the control I/O and the relay terminals, the general wiring diagram and the control signal descriptions.

The control board can be powered externally (+24VDC, ±10%) by connecting the external power source to terminal #30, see page 50. This voltage is sufficient for parameter setting and for keeping the control unit active. Note however that the measurements of the main circuit (e.g. DC-link voltage, unit temperature) are not available when the mains is not connected.

6.1 Control unit cabling

The basic control unit connections are presented in Figure 50 below. The control board is equipped with 22 fixed control I/O terminals and the relay board with 8. All signal descriptions are given in Tables 15 to 16.

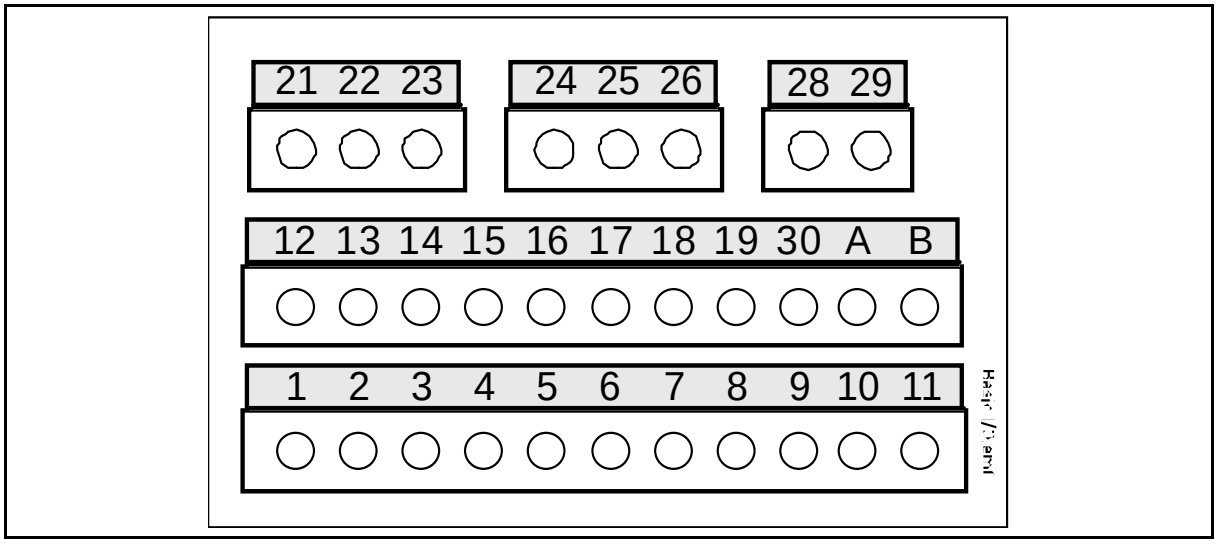

Figure 50.

6.1.1 Control cable sizing

The control cables shall be at least 0.5 mm² screened multicore cables, see Table 7. The maximum terminal wire size is 2.5 mm² for the relay and other terminals.

Find the tightening torques of the control and relay board terminals in Table 14 below.

Terminal screw	Tightening torque	
	Nm	lb-in.
All I/O and relay terminals (screw M3)	0.5	4.5

Table 14. Control cable tightening torques

6.1.2 Control terminals and DIP switches

The terminals of the *Basic I/O board* and the *Relay boards* are described below. For more information on the connections, see chapter 7.2.1.

The terminals shown on shadowed background are assigned for signals with optional functions selectable with DIP switches. See more information in chapter 6.1.2.1 on page 50.

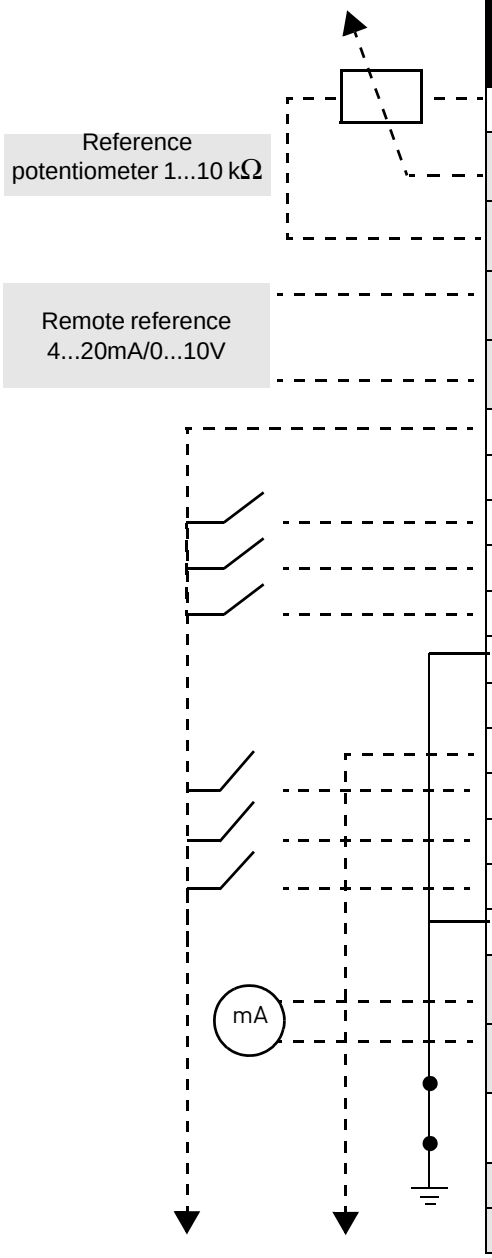

Basic I/O board		
Terminal		Signal
1	+10 Vref	Reference output
2	AI1+	Analogue input, voltage or current
3	AI1-	Analogue input common (current)
4	AI2+	Analogue input, voltage or current
5	AI2-	Analogue input common (current)
6	24Vout	24V aux. voltage
7	GND	I/O ground
8	DI1	Digital input 1
9	DI2	Digital input 2
10	DI3	Digital input 3
11	CM	Common for DI1-DI6*
12	24Vout	24V aux. voltage
13	GND	I/O ground
14	DI4	Digital input 4
15	DI5	Digital input 5
16	DI6	Digital input 6
17	CM	Common for DI1-DI6*
18	AO1+	Analogue signal (+output)
19	AO-/GND	Analogue output common
30	+24 VDCin	24VDC auxiliary input voltage
A	RS485	Negative
B	RS485	Positive

*. Digital inputs can be disconnected from ground, see chapter 6.1.2.2.

Table 15. Control I/O terminal signals on basic I/O board and connection example

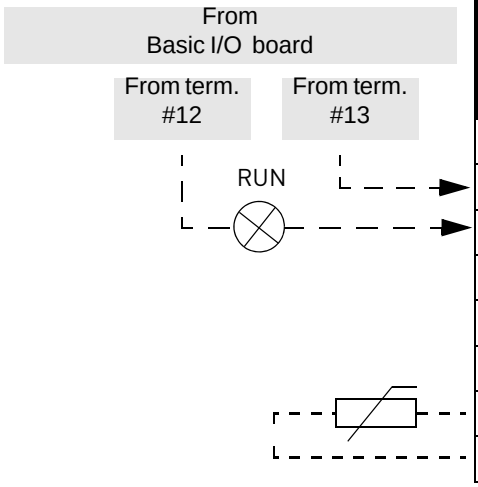

Relay board 2		
Terminal		Signal
21	RO1/1	Relay output 1
22	RO1/2	
23	RO1/3	
24	RO2/1	Relay output 2
25	RO2/2	
26	RO2/3	
28	TI1+	Thermistor input
29	TI1-	

Table 16. Control I/O terminal signals on relay board 2 and connection example

6.1.2.1 Selection of terminal functions with dip switches

The shadowed terminals in Table 15 allow for three functional selections each with the so-called *dip switches*. The switches have three positions, left, middle and right. The middle position is for *Test mode*. See figure to locate the switches and make appropriate selections for your requirements.

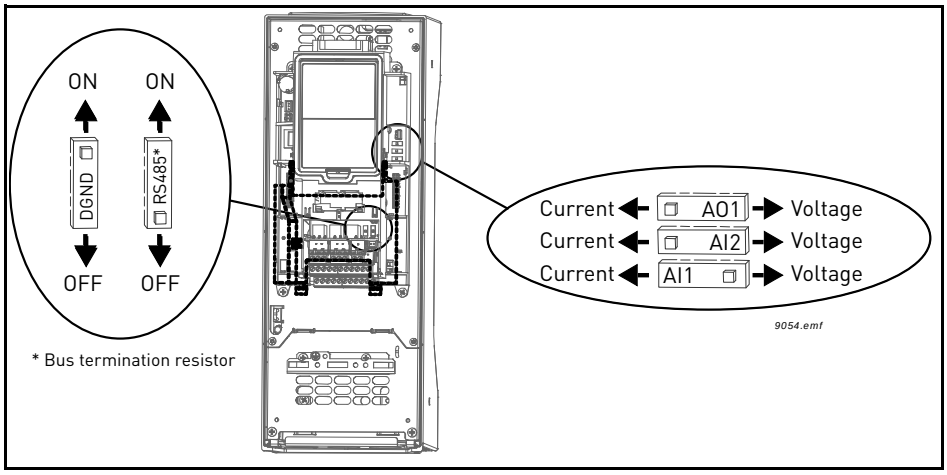

Figure 51. Dip switches

6.1.2.2 Disconnecting digital inputs from ground

The digital inputs (terminals 8-10 and 14-16) on the basic I/O board can be disconnected from ground by removing a jumper on the control board. See Figure 52. Lift the plastic lid to expose the jumper and apply long-nose pliers or similar to remove it.

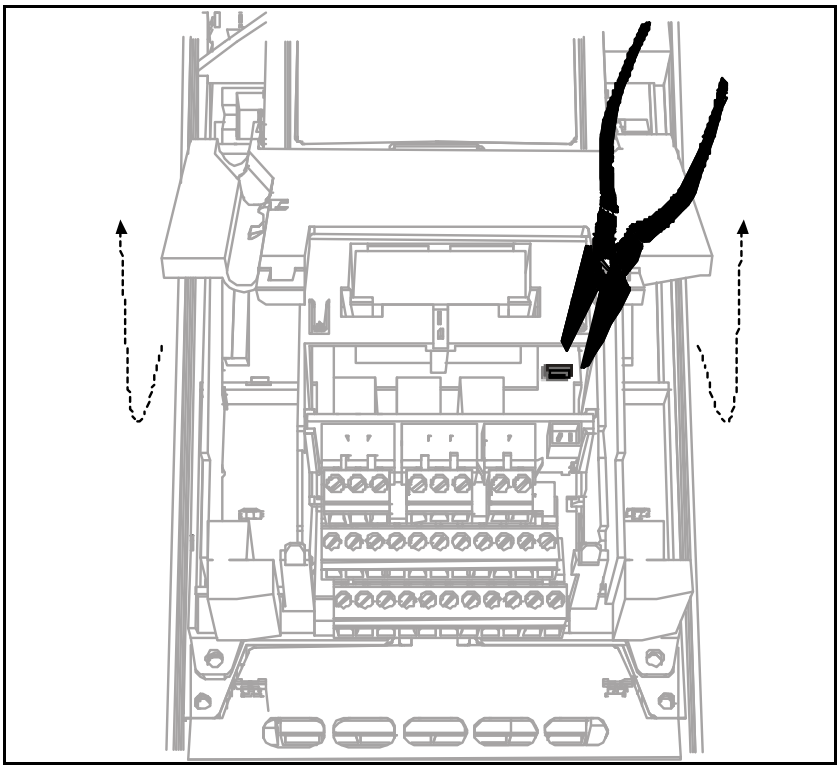

Figure 52. Remove this jumper to disconnect the digital inputs from ground.

6.2 Fieldbus connection

The drive can be connected to fieldbus either through RS485 or Ethernet. The connection for RS485 is on the basic I/O board (terminals A and B) and the connection for Ethernet is under the drive cover, left to the control keypad. See Figure 53.

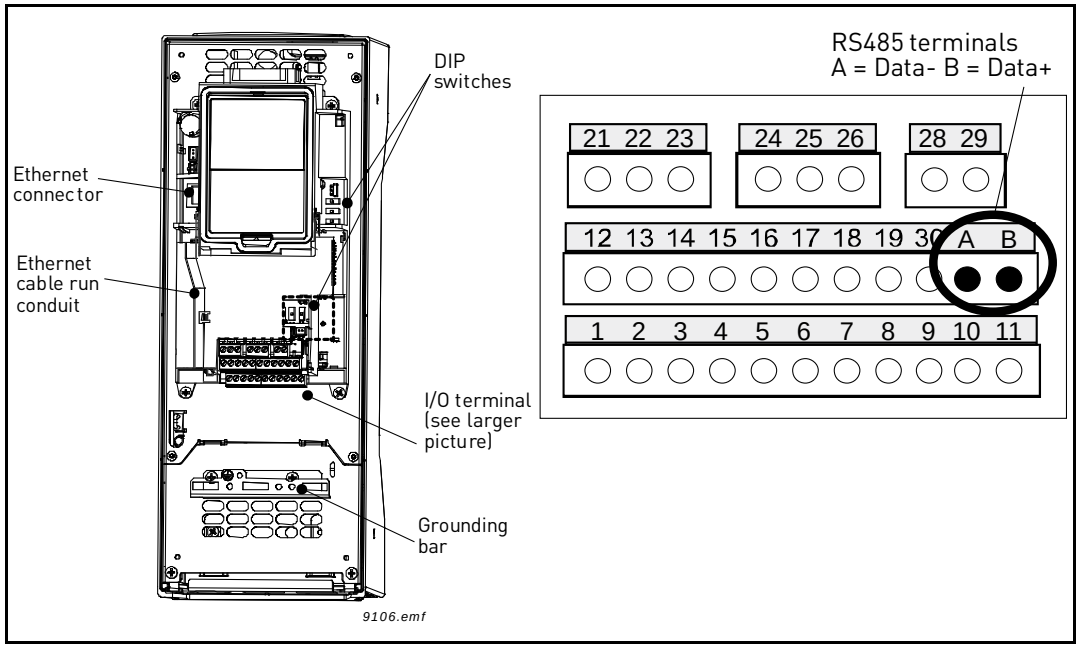

Figure 53.

6.2.1 Prepare for use through ethernet

1	Connect the Ethernet cable (see specification on page 54) to its terminal and run the cable through the conduit as shown in Figure 54.

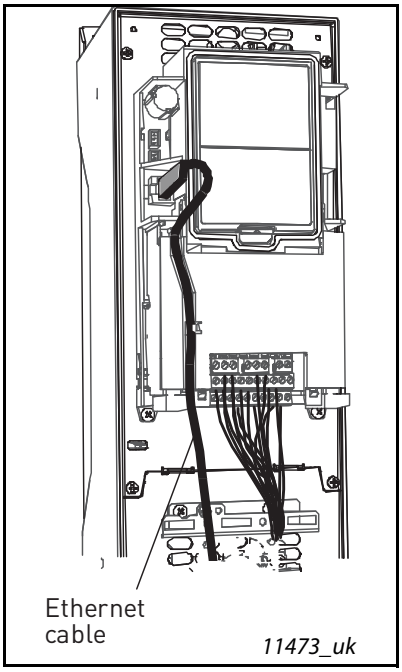

Figure 54.

2	Cut free the opening on the drive cover for the Ethernet cable (protection class IP21).

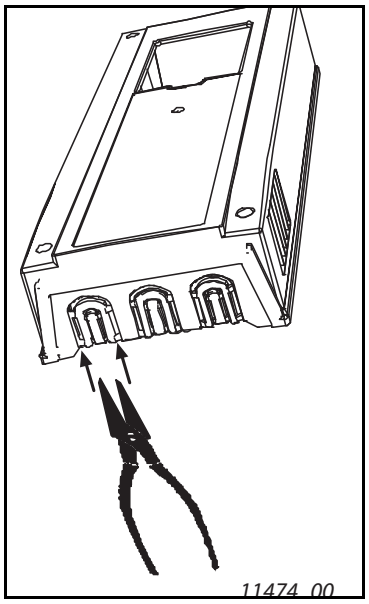

Figure 55.

3	Remount the drive cover. **NOTE:** When planning the cable runs, remember to keep the distance between the Ethernet cable and the motor cable at a **minimum of 12 inch**.

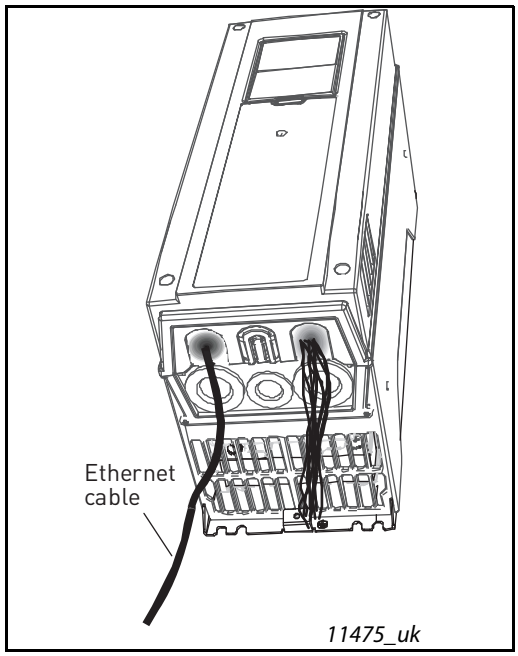

Figure 56.

For more detailed information, see the user's manual of the fieldbus you are using.

6.2.1.1 Ethernet cable data

Connector	Shielded RJ45 connector
Cable type	CAT5e STP
Cable length	Max .330 ft.

Table 17. Ethernet cable data

6.2.2 Prepare for use through MS/TP

1	Strip about .60 in. of the RS485 cable (see specification on page 57) and cut off the grey cable shield. Remember to do this for both bus cables (except for the last device). Leave no more than .40 in. of the cable outside the terminal block and strip the cables at about .20 in to fit in the terminals. See picture below. 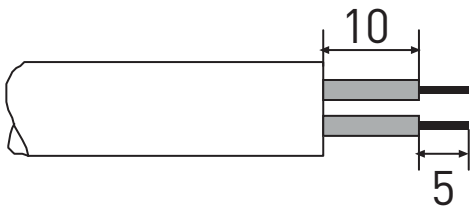 *11476_00* Also strip the cable now at such a distance from the terminal that you can fix it to the frame with the grounding clamp. Strip the cable at a maximum length of .60 in. **Do not strip the aluminum cable shield!** 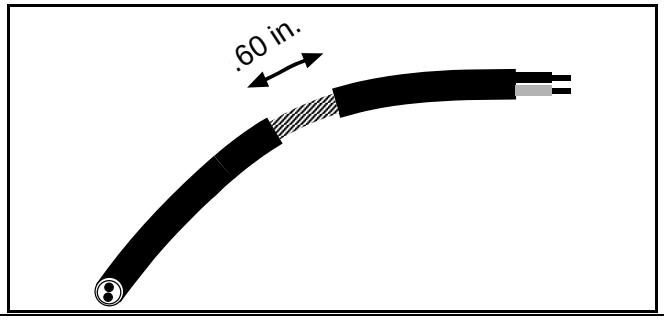

2	Then connect the cable to its appropriate terminals on Honeywell Smart VFD HVAC AC drive standard terminal block, terminals **A and B** (A = negative, B = positive). See Figure 57.

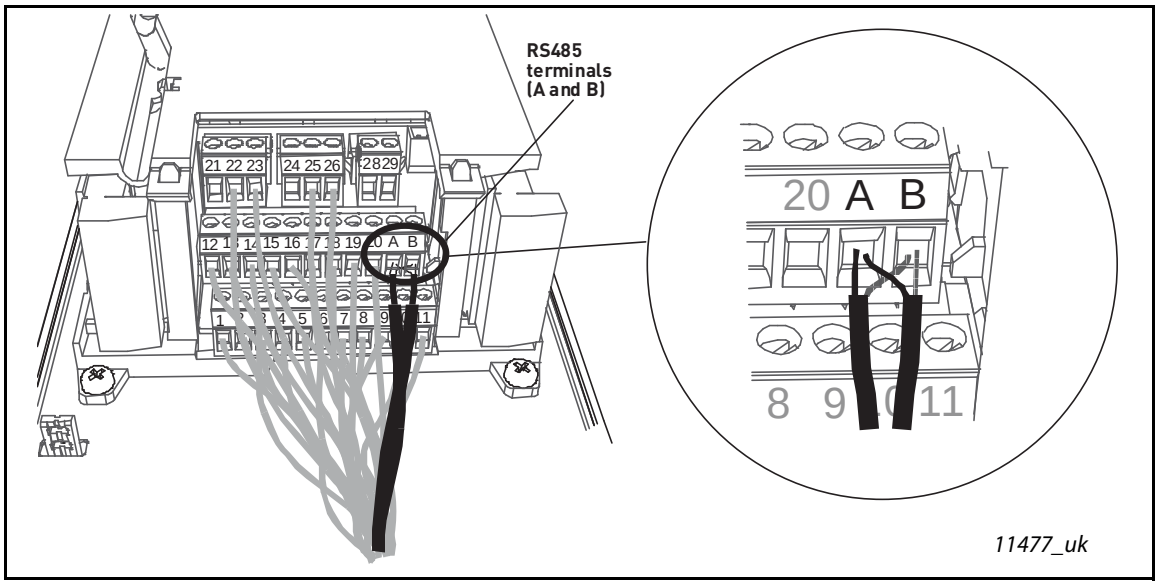

Figure 57.

3	Using the cable clamp included in the delivery of the drive, ground the shield of the RS485 cable to the frame of the drive. 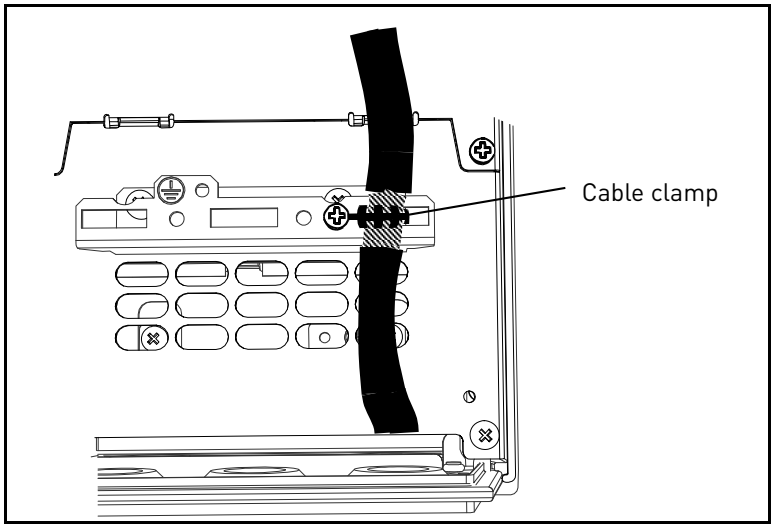

4	**If the drive is the last device on the bus**, the bus termination must be set. Locate the DIP switches to the right of the control keypad of the drive and turn the switch for the RS485 bus termination resistor to position ON. Biasing is built in the termination resistor. See also step 7 on page 57. 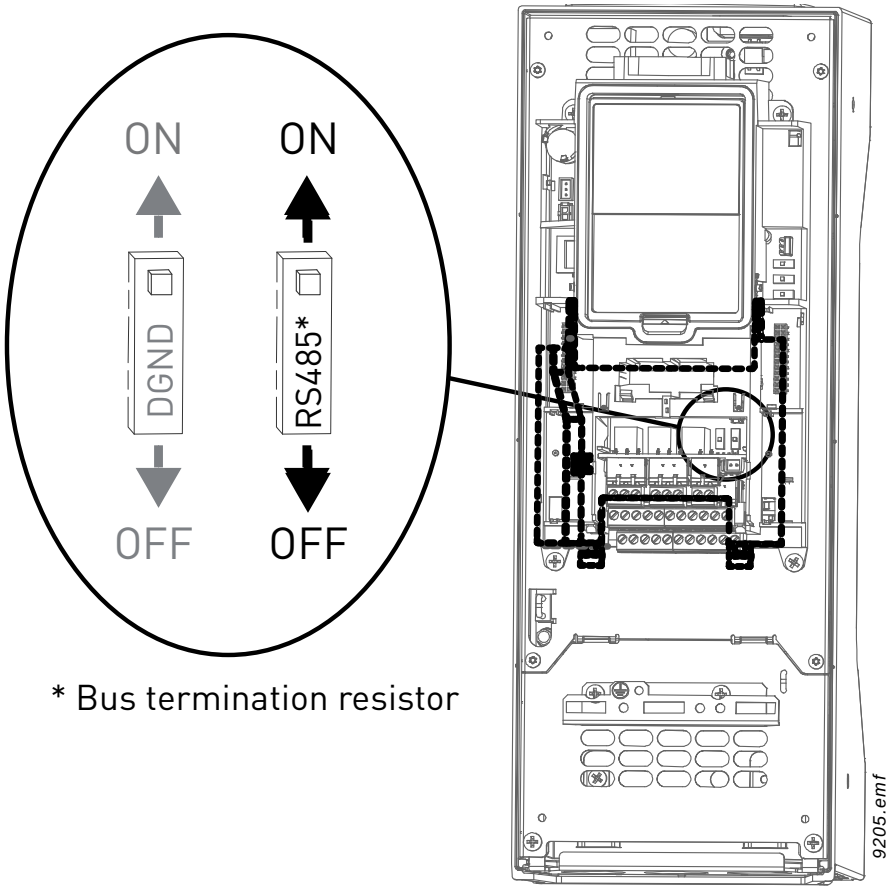 * Bus termination resistor
5	Unless already done for the other control cables, cut free the opening on the drive cover for the RS485 cable (protection class IP21). 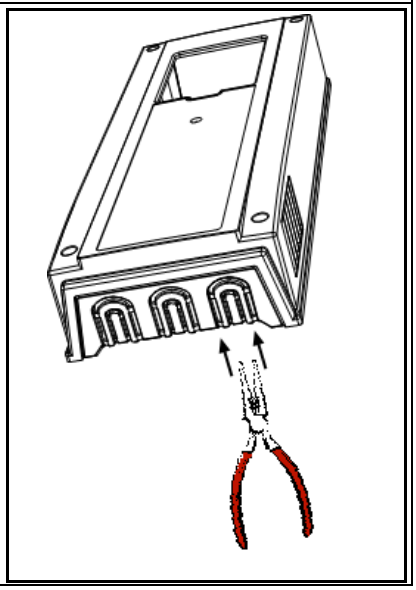

6	Remount the drive cover and run the RS485 cables as shown in picture. **NOTE:** When planning the cable runs, remember to keep the distance between the fieldbus cable and the motor cable at a **minimum of 12 in**. 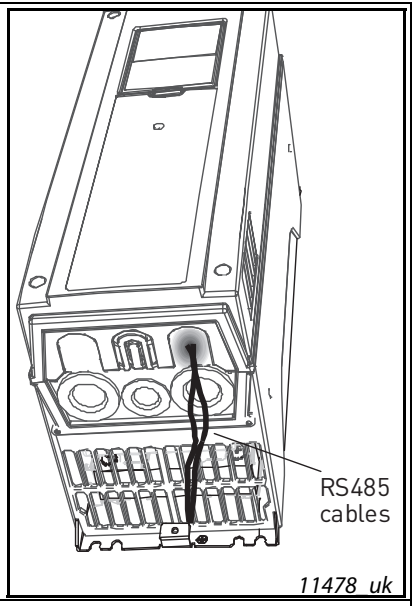
7	The bus termination must be set for the first and the last device of the fieldbus line. See picture below. See also step 4 on page 56. We recommend that the first device on the bus and, thus, terminated was the Master device. 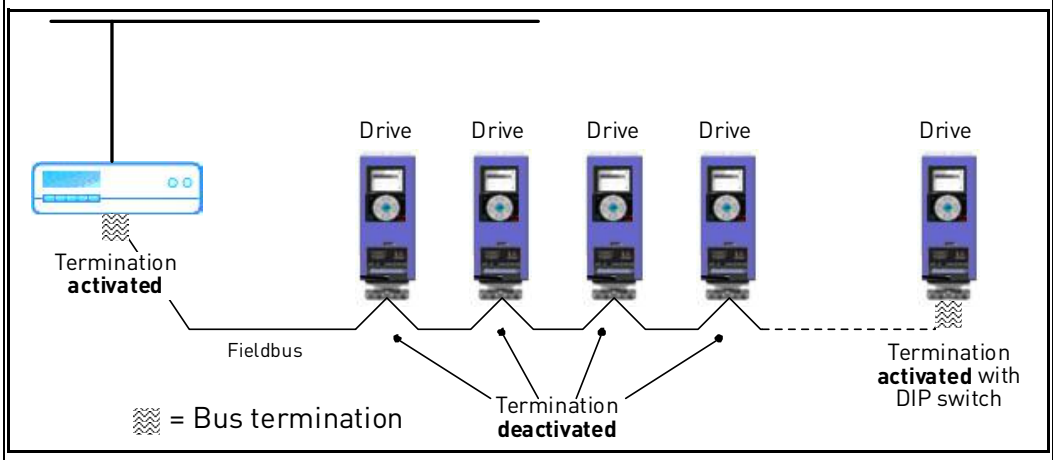

6.2.3 RS485 cable data

Connector	2.5 mm²
Cable type	STP (Shielded Twisted Pair), type Belden 9841 or similar
Cable length	Depends on the used fieldbus. See respective bus manual.

Table 18. RS485 cable data

6.3 Battery installation for Real Time Clock (RTC)

Enabling the functions of the *Real Time Clock (RTC)* requires that a battery is installed in the Smart VFD HVAC drive.

The place for the battery can be found in all frames left to the control keypad (see Figure 58).

Detailed information on the functions of the *Real Time Clock (RTC)* can be found in the Application Manual.

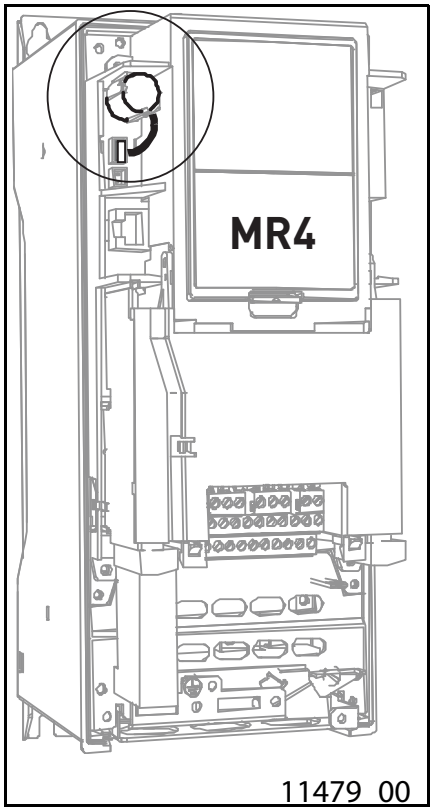

Figure 58. Real Time Clock battery

6.4 Galvanic isolation barriers

The control connections are isolated from the mains potential and the GND terminals are permanently connected to ground. See Figure 59.

The digital inputs are galvanically isolated from the I/O ground. The relay outputs are additionally double-isolated from each other at 300VAC (EN-50178).

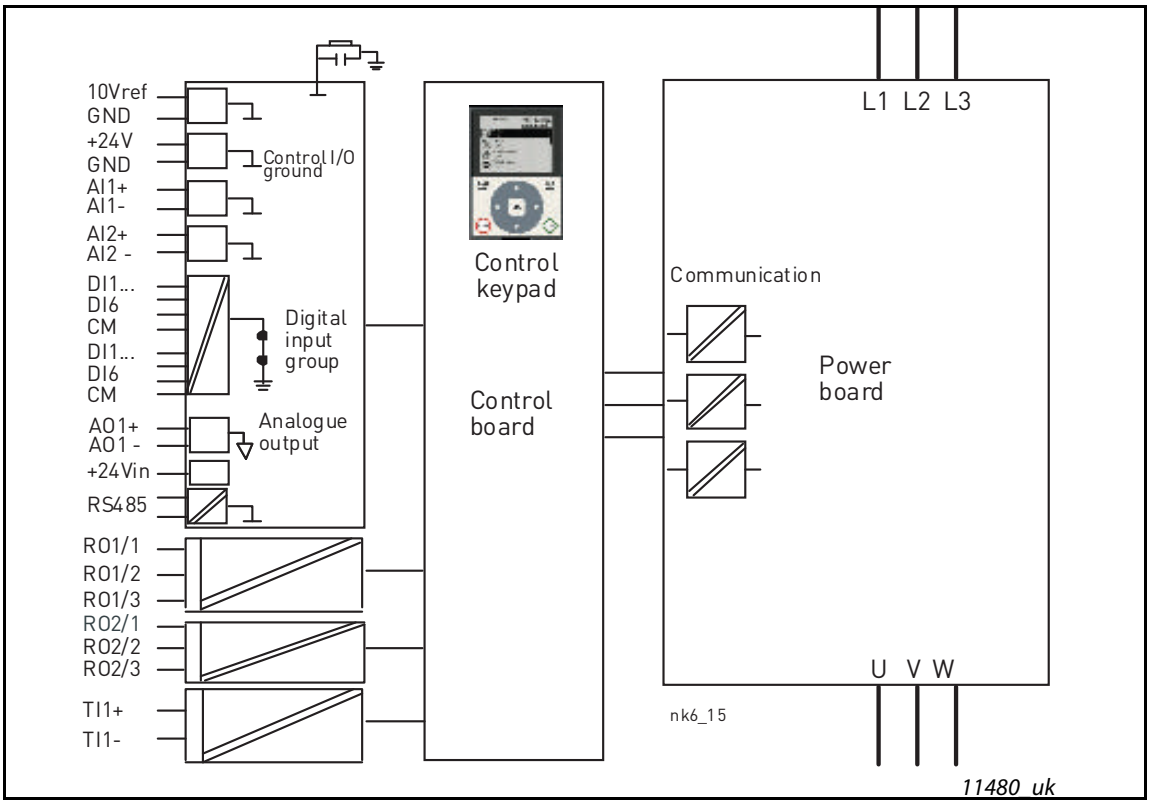

Figure 59. Galvanic isolation barriers

7. PRODUCT DATA

7.1 Power ratings

7.1.1 Mains voltage 208-240 V

	Mains voltage 208-240V, 50-60 Hz, 3~				
	Converter type	Loadability		Motor shaft power	
		Low*		230 supply	208-240V supply
		Rated continuous current I_L [A]	10% overload current [A]	10% overload 40°C [kW]	10% overload 40°C [hp]
MR4	A 0007	3.7	4.1	0.55	0.75
	A 0010	4.8	5.3	0.75	1.0
	A 0015	6.6	7.3	1.1	1.5
	A 0020	8.0	8.8	1.5	2.0
	A 0030	11.0	12.1	2.2	3.0
	A 0040	12.5	13.8	3.0	4.0
MR5	A 0050	18.0	19.8	4.0	5.0
	A 0075	24.2	26.4	5.5	7.5
	A 0100**	31.0	34.1	7.5	10.0
MR6	A 0150	48.0	52.8	11.0	15.0
	A 0200**	62.0	68.2	15.0	20.0
MR7	A 0250	75.0	82.5	18.5	25.0
	A 0300	88.0	96.8	22.0	30.0
	A 0400	105.0	115.5	30.0	40.0
MR8	A 0500	143.0	154.0	37.0	50.0
	A 0600	170.0	187.0	45.0	60.0
	A 0750	208.0	225.5	55.0	75.0
MR9	A 1000	261.0	287.1	75.0	100.0
	A 1250	310.0	341.0	90.0	125.0

* See chapter 7.1.3.

** Given low loadabilities valid for 230V drives at a switching frequency of 4kHz

Table 20. Power ratings, supply voltage 208-240V.

NOTE: The rated currents in given ambient temperatures (in Table 20) are achieved only when the switching frequency is equal to or less than the factory default.

7.1.2 Mains voltage 380-480V

	Mains voltage 380-480V, 50-60 Hz, 3~				
	Converter type	Loadability		Motor shaft power	
		Low*		400V supply	480V supply
		Rated continuous current I_L [A]	10% overload current [A]	10% overload 104°F [kW]	10% overload 104°F [HP]
MR4	C 0015	3.4	3.7	1.1	1.5
	C 0020	4.8	5.3	1.5	2.0
	C 0030	5.6	6.2	2.2	3.0
	C 0040	8.0	8.8	3.0	4.0
	C 0050	9.6	10.6	4.0	5.0
	C 0075**	12.0	13.2	5.5	7.5
MR5	C 0100	16.0	17.6	7.5	10
	C 0150	23.0	25.3	11.0	15.0
	C 0200**	31.0	34.1	15.0	20.0
MR6	C 0250	38.0	41.8	18.5	25.0
	C 0300	46.0	50.6	22.0	30.0
	C 0400**	61.0	67.1	30.0	40.0
MR7	C 0500	72.0	79.2	37.0	50.0
	C 0600	87.0	95.7	45.0	60.0
	C 0750	105.0	115.5	55.0	75.0
MR8	C 1000	140.0	154.0	75	100
	C 1250	170.0	187.0	90	125
	C 1500	205.0	225.5	110	150
MR9	C 2000	261.0	287.1	132	200
	C 2500	310.0	341.0	160	250

* See chapter 7.1.3

** Given low loadabilities valid for 480V drives at a switching frequency of 4kHz

Table 19. Power ratings, supply voltage 380-480V.

NOTE: The rated currents in given ambient temperatures (in Table 20) are achieved only when the switching frequency is equal to or less than the factory default.

7.1.3 Definitions of overloadability

Low overload =Following continuous operation at rated output current I_L, the converter is fed with 110% * I_L for 1 min, followed by a period of I_L.

Example: If the duty cycle requires 110% rated current I_L for 1 min in every 10 min, the remaining 9 min must be at rated current or less.

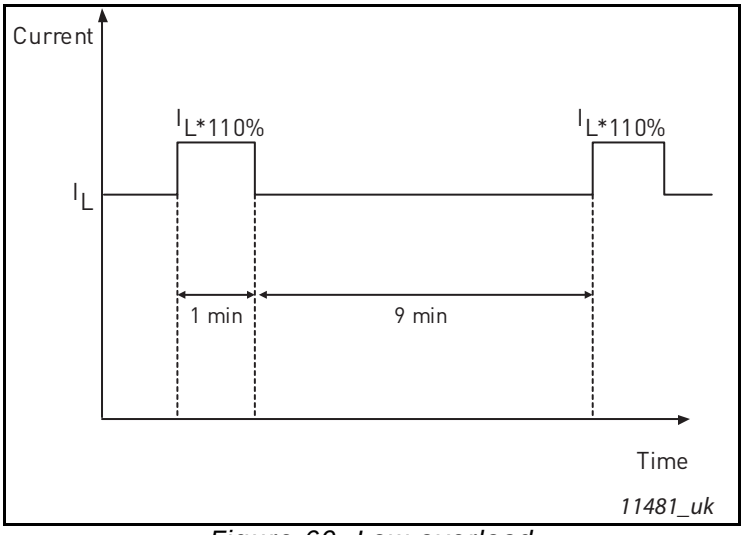

Figure 60. Low overload

7.2 SmartVFD HVAC - technical data

Mains connection	Input voltage U_{in}	208...240V; 380…480V; -10%…+10%
	Input frequency	47…66 Hz
	Connection to mains	Once per minute or less
	Starting delay	4 s (MR4 to MR6); 6 s (MR7 to MR9)
Motor connection	Output voltage	0-U_{in}
	Continuous output current	I_L:Ambient temperature max. +104°F, overload 1.1 x I_L (1 min./10 min.)
	Starting current	I_S for 2 s every 20 s
	Output frequency	0…320 Hz (standard)
	Frequency resolution	0.01 Hz
Control characteristics	Switching frequency (see parameter M3.1.2.1)	1.5…10 kHz; Defaults: 6 kHz (MR4-6), 4 kHz (MR7), 3 kHz (MR8-9) Automatic switching frequency derating in case of overheating
	Frequency reference Analogue input Panel reference	 Resolution 0.1% (10-bit), accuracy ±1% Resolution 0.01 Hz
	Field weakening point	8…320 Hz
	Acceleration time	0.1…3000 sec
	Deceleration time	0.1…3000 sec

Ambient conditions	Ambient operating temperature	I_L : -10°C (no frost)…+40°C, 14 (no frost) ... 104 F
	Storage temperature	-40°C ... +70°C -40°F…+158°F
	Relative humidity	0 to 95% R_H, non-condensing, non-corrosive
	Air quality: chemical vapours mechanical particles	 IEC 60721-3-3, unit in operation, class 3C2 IEC 60721-3-3, unit in operation, class 3S2
	Altitude	100% load capacity (no derating) up to 1,000 m / 3280 ft 1-% derating for each 100m/328ft above 1,000m/3280ft Max. altitudes: **208...240V:** 4,500/14763ft (TN and IT systems) **380...480V:** 4,500m/14763 ft (TN and IT systems) Voltage for I/O signals: Up to 2,000m/6561ft : Allowed up to **240V** 2,000m...4,500m / 6561...14763ft: Allowed up to **120V**
Ambient conditions (cont.)	Vibration EN61800-5-1/ EN60068-2-6	5…150 Hz **Displacement amplitude** 1 mm (peak) at 5…15.8 Hz (MR4…MR9) **Max acceleration amplitude** 1 G at 15.8…150 Hz (MR4…MR9)
	Shock EN61800-5-1 EN60068-2-27	UPS Drop Test (for applicable UPS weights) Storage and shipping: max 15 G, 11 ms (in package)
	Enclosure class	IP21/NEMA 1 standard in entire kW/HP range IP54/NEMA12 option Note! Keypad required for IP54/NEMA12
EMC (at default settings)	Immunity	Fulfils EN61800-3 (2004), first and second environment
	Emissions	Depend on EMC level. +EMC2: EN61800-3 (2004), Category C2 Honeywell Smart VFD HVAC will be delivered with class C2 EMC filtering, if not otherwise specified. Honeywell Smart VFD HVAC can be modified for IT-networks. See chapter 5.2.
Emissions	Average noise level (cooling fan) sound power level in dB(A)	MR4: 65 MR7: 77 MR5: 70 MR8: 86 MR6: 77 MR9: 87
Safety		EN 61800-5-1 (2007), CE, cUL; (see unit nameplate for more detailed approvals)

Control connections	**See chapter 7.2.1.**	
Protections	Overvoltage trip limit Undervoltage trip limit	Yes Yes
	Ground fault protection	In case of ground fault in motor or motor cable, only the drive is protected
	Mains supervision	Yes
	Motor phase supervision	Trips if any of the output phases is missing
	Overcurrent protection	Yes
	Unit overtemperature protection	Yes
Protections (cont.)	Motor overload protection	Yes
	Motor stall protection	Yes
	Motor underload protection	Yes
	Short-circuit protection of +24V and +10V reference voltages	Yes

Table 20. Smart VFD HVAC technical data

7.2.1 Technical information on control connections

Basic I/O board		
Terminal	**Signal**	**Technical information**
1	Reference output	+10V, +3%; Maximum current 10 mA
2	Analogue input, voltage or current	Analogue input channel 1 0- +10V (Ri = 200 kΩ) 4-20 mA (Ri =250 Ω) Resolution 0.1 %, accuracy ±1 % Selection V/mA with dip-switches (see page 50)
3	Analogue input common (current)	Differential input if not connected to ground; Allows ±20V differential mode voltage to GND
4	Analogue input, voltage or current	Analogue input channel 1 Defauit:4-20 mA (Ri =250 Ω) 0-10 V (Ri=200kΩ) Resolution 0.1 %, accuracy ±1 % Selection V/mA with dip-switches (see page 50)
5	Analogue input common (current)	Differential input if not connected to ground; Allows 20V differential mode voltage to GND
6	24V aux. voltage	+24VDC, ±10%, max volt. ripple < 100mVrms; max. 250mA Dimensioning: max. 1000mA/control box. Short-circuit protected
7	I/O ground	Ground for reference and controls (connected internally to frame ground through 1MΩ)
8	Digital input 1	Positive or negative logic Ri = min. 5kΩ 18…30V = "1"
9	Digital input 2	
10	Digital input 3	
11	Common A for DIN1-DIN6	Digital inputs can be disconnected from ground, see chapter 6.1.2.2.
12	24V aux. voltage	+24VDC, ±10%, max volt. ripple < 100mVrms; max. 250mA Dimensioning: max. 1000mA/control box. Short-circuit protected
13	I/O ground	Ground for reference and controls (connected internally to frame ground through 1MΩ)
14	Digital input 4	Positive or negative logic Ri = min. 5kΩ 18…30V = "1"
15	Digital input 5	
16	Digital input 6	
17	Common A for DIN1-DIN6	Digital inputs can be disconnected from ground, see chapter 6.1.2.2.
18	Analogue signal (+output)	Analogue output channel 1, selection 0 -20mA, load <500 Ω Default:0-20 mA 0-10V Resolution 0.1 %, accuracy ±2 % Selection V/mA with dip-switches (see page 50)
19	Analogue output common	
30	24V auxiliary input voltage	Can be used as external power backup for the control unit (and fieldbus)
A	RS485	Differential receiver/transmitter Set bus termination with dip switches (see page 50)
B	RS485	

Table 21. Technical information on basic I/O board

Relay board 1	Relay board with two Type 8A/STST and one Type 8A/STDT relays. 5,5 mm isolation between channels. External interface connector See chapter 6.	
21	Relay output 1*	Switching capacity24VDC/8A 250VAC/8A 125VDC/0.4A Min.switching load5V/10mA
22		
23		
24	Relay output 2*	Switching capacity24VDC/8A 250VAC/8A 125VDC/0.4A Min.switching load5V/10mA
25		
26		
32	Relay output 3*	Switching capacity24VDC/8A 250VAC/8A 125VDC/0.4A Min.switching load5V/10mA
33		

* If 230VAC is used as control voltage from the output relays, the control circuitry must be powered with a separate isolation transformer to limit short circuit current and overvoltage spikes. This is to prevent welding on the relay contacts. Refer to standard EN 60204-1, section 7.2.9

Table 22. Technical information on Relay board 1

Relay board 2	Relay board with two Type 8A/STST and standard thermistor input. 5,5 mm isolation between channels. External interface connector See chapter 6.	
21	Relay output 1*	Switching capacity24VDC/8A 250VAC/8A 125VDC/0.4A Min.switching load5V/10mA
22		
23		
24	Relay output 2*	Switching capacity24VDC/8A 250VAC/8A 125VDC/0.4A Min.switching load5V/10mA
25		
26		
28	Thermistor input	Rtrip = 4.7 kΩ (PTC); Measuring voltage 3.5V
29		

* If 230VAC is used as control voltage from the output relays, the control circuitry must be powered with a separate isolation transformer to limit short circuit current and ovrvoltage spikes. This is to prevent welding on the relay contacts. Refer to standard EN 60204-1, section 7.2.9

Table 23. Technical information on Relay board 2

Automation and Control Solutions

Honeywell lntemational lnc.
1985 Douglas Drive North
Golden Valley, MN 55422
customer.honeywell.com

Honeywell Limited-Honeywell Limitée
35 Dynamic Drive
Toronto, Ontario M1V 4Z9

® U.S. Registered Trademark
© 2014 Honeywell International Inc.
38-00007—01 M.S. 07-14
Printed in U.S.A.

Honeywell

Subject to change without notice