magicolor® 2490MF Printer / Copier / Scanner User's Guide

4556-9597-00A

1800798-001A

Thank You

Thank you for purchasing a magicolor 2490MF. You have made an excellent choice. Your magicolor 2490MF is specially designed for optimal performance in Windows, environments.

Trademarks

KONICA MINOLTA and the KONICA MINOLTA logo are trademarks or registered trademarks of KONICA MINOLTA HOLDINGS, INC.

magicolor is a trademark or registered trademark of KONICA MINOLTA PRINTING SOLUTIONS U.S.A., INC.

Copyright Notice

Copyright © 2006 KONICA MINOLTA BUSINESS TECHNOLOGIES, INC., Marunouchi Center Building, 1-6-1 Marunouchi, Chiyoda-ku, Tokyo, 100-0005, Japan. All Rights Reserved. This document may not be copied, in whole or part, nor transferred to any other media or language, without written permission of KONICA MINOLTA BUSINESS TECHNOLOGIES, INC.

Notice

KONICA MINOLTA BUSINESS TECHNOLOGIES, INC. reserves the right to make changes to this guide and to the equipment described herein without notice. Considerable effort has been made to ensure that this guide is free of inaccuracies and omissions. However, KONICA MINOLTA BUSINESS TECHNOLOGIES, INC. makes no warranty of any kind including, but not limited to, any implied warranties of merchantability and fitness for a particular purpose with regard to this guide.
KONICA MINOLTA BUSINESS TECHNOLOGIES, INC. assumes no responsibility for, or liability for, errors contained in this guide or for incidental, special, or consequential damages arising out of the furnishing of this guide, or the use of this guide in operating the equipment, or in connection with the performance of the equipment when so operated.

SOFTWARE LICENSE AGREEMENT

This package contains the following materials provided by Konica Minolta Business Technologies, Inc. (KMBT): software included as part of the printing system, the digitally-encoded machine-readable outline data encoded in the special format and in the encrypted form (“Font Programs”), other software which runs on a computer system for use in conjunction with the Printing Software (“Host Software”), and related explanatory written materials (“Documentation”). The term “Software” shall be used to describe Printing Software, Font Programs and/or Host Software and also include any upgrades, modified versions, additions, and copies of the Software.
The Software is being licensed to you under the terms of this Agreement.
KMBT grants to you a non-exclusive sublicense to use the Software and Documentation, provided that you agree to the following:

1. You may use the Printing Software and accompanying Font Programs for imaging to the licensed output device(s), solely for your own internal business purposes.
2. In addition to the license for Font Programs set forth in Section 1 (“Printing Software”) above, you may use Roman Font Programs to reproduce weights, styles, and versions of letters, numerals, characters and symbols (“Typefaces”) on the display or monitor for your own internal business purposes.
3. You may make one backup copy of the Host Software, provided your backup copy is not installed or used on any computer. Notwithstanding the above restrictions, you may install the Host Software on any number of computers solely for use with one or more printing systems running the Printing Software.
4. You may assign its rights under this Agreement to an assignee of all of Licensee’s right and interest to such Software and Documentation (“Assignee”) provided you transfer to Assignee all copies of such Software and Documentation Assignee agrees to be bound by all of the terms and conditions of this Agreement.
5. You agree not to modify, adapt or translate the Software and Documentation.
6. You agree that you will not attempt to alter, disassemble, decrypt, reverse engineer or decompile the Software.
7. Title to and ownership of the Software and Documentation and any reproductions thereof shall remain with KMBT and its Licensor.
8. Trademarks shall be used in accordance with accepted trademark practice, including identification of the trademark owner’s name. Trademarks can only be used to identify printed output produced by the Software. Such use of any trademark does not give you any rights of ownership in that trademark.
9. You may not rent, lease, sublicense, lend or transfer versions or copies of the Software that the Licensee does not use, or Software contained on any unused media, except as part of the permanent transfer of all Software and Documentation as described above.
10. In no event will KMBT or its licensor be liable to you for any consequential, incidental INDIRECT, PUNITIVE or special damages, including any lost profits or lost saving, even if KMBT has been advised of the possibility of such damages, or for any claim by any third party. KMBT or its licensor disclaims all warranties with regard to the software, express or implied, including, without limitation implied warranties of merchantability, fitness for a particular purpose, title and non-infringement of third party rights. Some states or jurisdictions do not allow the exclusion or limitation of incidental, consequential or special damages, so the above limitations may not apply to you.

11. Notice to Government End Users: The Software is a “commercial item,” as that term is defined at 48 C.F.R.2.101, consisting of “commercial computer software” and “commercial computer software documentation,” as such terms are used in 48 C.F.R. 12.212. Consistent with 48 C.F.R. 12.212 and 48 C.F.R. 227.7202-1 through 227.7202-4, all U.S. Government End Users acquire the Software with only those rights set forth herein.
12. You agree that you will not export the Software in any form in violation of any applicable laws and regulations regarding export control of any countries.

Legal Restrictions on Copying

Certain types of documents must never be copied with the purpose or intent to pass copies of such documents off as the originals.

The following is not a complete list, but is meant to be used as a guide to responsible copying.

Financial Instruments

- Personal checks
- Traveler's checks
- Money orders
- Certificates of deposit
- Bonds or other certificates of indebtedness
- Stock certificates

Legal Documents

- Food stamps
- Postage stamps (canceled or uncanceled)
- Checks or drafts drawn by government agencies
- Internal revenue stamps (canceled or uncanceled)
- Passports
- Immigration papers
- Motor vehicle licenses and titles
- House and property titles and deeds

General

- Identification cards, badges, or insignias
- Copyrighted works without permission of the copyright owner

In addition, it is prohibited under any circumstances to copy domestic or foreign currencies, or works of art without permission of the copyright owner.

When in doubt about the nature of a document, consult with legal counsel.

In order to prohibit the illegal reproduction of certain documents, such as paper currency, this machine is equipped with a counterfeit prevention feature.
Due to the counterfeit prevention feature that this machine is equipped with, images may be distorted.

For EU member states only

This symbol means: **Do not dispose of this product together with your household waste!**

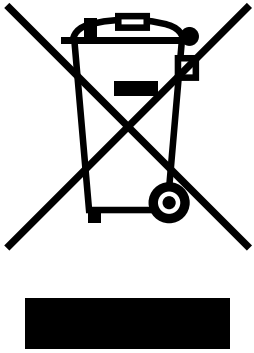

Please contact the Local Authority for appropriate disposal instructions. In the case of a new device being purchased, the used one can also be given to our dealer for appropriate disposal. Recycling of this product will help to conserve natural resources and prevent potential negative consequences for the environment and human health caused by inappropriate waste handling.

This product complies with RoHS (2002/95/EC) directive.

Contents

1 Introduction 1
Getting Acquainted with Your Machine 2
Space Requirements 2
Installation Precautions 2
Part Names 3
Front View 3
Rear View 4
Inside 4
Front View with Options 5
Rear View with Options 5
Drivers and Documentation CD-ROM 6
Printer Drivers 6
Scanner Drivers 6
Applications CD-ROM 7
Applications 7
Utility 7
System Requirements 8

2 Control Panel and Configuration Menu 9
About the Control Panel 10

Control Panel Indicators and Keys 10
Display Indications 14
Main Screen 14
Print Screen 16
Checking the Machine Status and Settings 17
TONER REMAINING 17
TOTAL PAGE 17
TX/RX RESULT 18
PRINT REPORT 18
Functions Available With the Function Key 20
Configuration Menu Overview 21
Configuration Menu 21
MACHINE SETTING Menu 25
PAPER SOURCE SETUP Menu 27
COPY SETTING Menu 28
FAX REGISTRATION Menu 29
TX SETTING Menu 29
RX SETTING Menu 30
COMM. SETTING Menu 30
REPORTING Menu 30
USER SETTING Menu 31
DIRECT PRINT Menu 32
NETWORK SETTING Menu 33
E-MAIL SETTING Menu 34
SCANNER SETTING Menu 35

3 Media Handling 37
Print Media 38
Specifications 38
Types 39
Plain Paper (Recycled Paper) 39
Thick Stock 40
Envelope 41
Labels 42
Letterhead 43
Postcard 43
Transparency 44
Glossy Media 45
Guaranteed Imageable (Printable) Area 46
Imageable Area—Envelopes 46
Page Margins 46
Loading Media 47
Tray 1 (Multipurpose Tray) 47
Loading Plain Paper 47
Other Media 50
Loading Envelopes 50

Loading Labels/Postcard/Thick Stock/Transparency/Glossy media 57
Tray 2 59
Loading Plain Paper 59
About Duplex Printing 62
Double-Sided 62
Booklet 63
Output Bin 64
Media Storage 66
Original Media 67
Specifications 67
Documents that can be Placed on the Original Glass 67
Documents that can be Loaded into the ADF 67
Loading a Document to be Copied 69
Placing a Document on the Original Glass 69
Loading a Document into the ADF 70

4 Using the Printer Driver 71
Selecting Printer Driver Options/Defaults 72
Uninstalling the Printer Driver 74
Displaying Printer Driver Settings 74
Windows XP/Server 2003 74
Windows 2000/Me/98SE 74
Printer Driver Settings 75
Common Buttons 75
OK 75
Cancel 75
Apply 75
Help 75
Easy Set 75
Paper View 75
Printer View 76
Watermark View 76
Quality View 76
Default 76
Basic Tab 76
Layout Tab 77
Overlay Tab 77
Watermark Tab 77
Quality Tab 77
Device Options Setting Tab 78
Version Tab 78

5 Using Direct Print 79
Camera Direct Photo Printing 80
Printing Directly from a Digital Camera 80

6 Using the Copier 83
Making Basic Copies 84
Basic Copy Operation 84
Specifying the Copy Quality 85
Specifying the Zoom Ratio 85
Selecting a Preset Zoom Ratio 86
Specifying a Custom Zoom Ratio 86
Selecting the Copy Density 87
Selecting the Media Tray 87
Making Advanced Copies 88
Setting 2in1 Copying 88
ID Card Copying 89
Setting Duplex (Double-Sided) Copying 91
Duplex (Double-Sided) Copying From the ADF 91
Duplex (Double-Sided) Copying From the Original Glass 92
Setting Collated Copying 93

7 Using the Scanner 95
Making Basic Scans 96
Scanning via USB 96
Scanner Driver Settings 97
Original Size 97
Scan Type 97
Resolution 97
Scanning mode 97
Image size 97
Scan 97
About 97
Close 97
Preview Window 97
Clear 97
Width/Height 98
Prescan 98
Help 98
Basic Scan to Email Operation 99
Scan to Email Using the ADF 99
Scan to Email Using the Original Glass 101
Specifying a Recipient 104
Directly Entering an Email Address 104
Using a One-Touch Dial Key 104
Using the Speed Dial Function 105
Using the List Function of the Phone Book 105
Using the Search Function of the Phone Book 106
Changing the Scan Mode Settings 107
Changing the Scanned Image Size 108

8 Replacing Consumables 109
Replacing the Toner Cartridge 110
To Replace a Toner Cartridge 113
Replacing the Drum Cartridge 120

9 Maintenance 125
Maintaining the Machine 126
Cleaning the Machine 128
Exterior 128
Interior 129
Cleaning the Media Feed Roller and Laser Lens 129
Cleaning the Duplex Option Feed Rollers 135
Cleaning the Media Feed Rollers for Tray 2 136
Cleaning the Media Feed Rollers for the ADF 138
Storing the Machine 139

10 Troubleshooting 141
Introduction 142
Preventing Media Misfeeds 143
Understanding the Media Path 144
Clearing Media Misfeeds 144
Media Misfeed Messages and Clearing Procedures 145
Clearing a Media Misfeed in the Machine 146
Clearing a Media Misfeed from the Duplex Option 156
Clearing a Media Misfeed from the ADF 157
Solving Problems with Media Misfeeds 159
Solving Other Problems 162
Solving Problems with Printing Quality 168
Status, Error, and Service Messages 175
Status Messages 175
Error Messages 176
Service Messages 183

11 Installing Accessories 185
Introduction 186
Duplex Option 187
Installing the Duplex Option 187
Tray 2 191
Installing Tray 2 191

A Appendix 193
Technical Specifications 194
Consumable Life Expectancy Chart 197
User-Replaceable 197
Service-Replaceable 197
Our Concern for Environmental Protection 198

What is an ENERGY STAR product? 198
Index 199

1

Introduction

Getting Acquainted with Your Machine

Space Requirements

To ensure easy operation, consumable replacement and maintenance, adhere to the recommended space requirements detailed below.

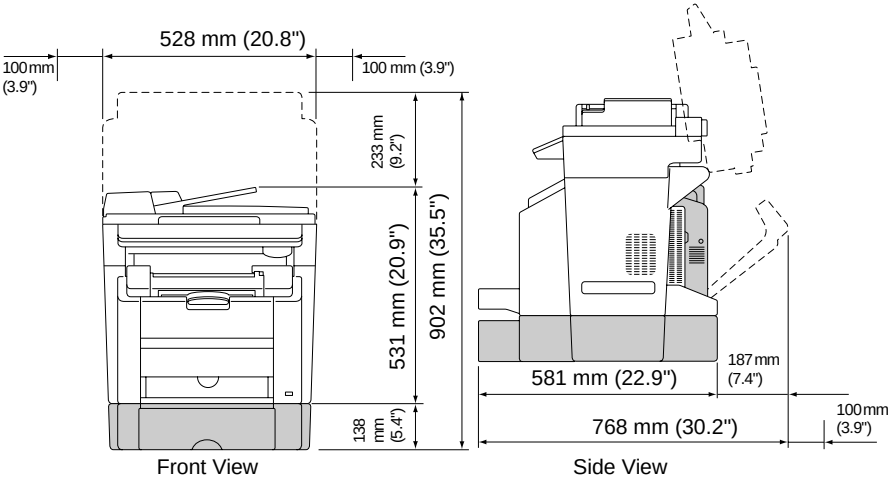

The options appear shaded in the above illustration.

Installation Precautions

When setting up this machine on a desk, make sure that the supports do not extend off the desk.

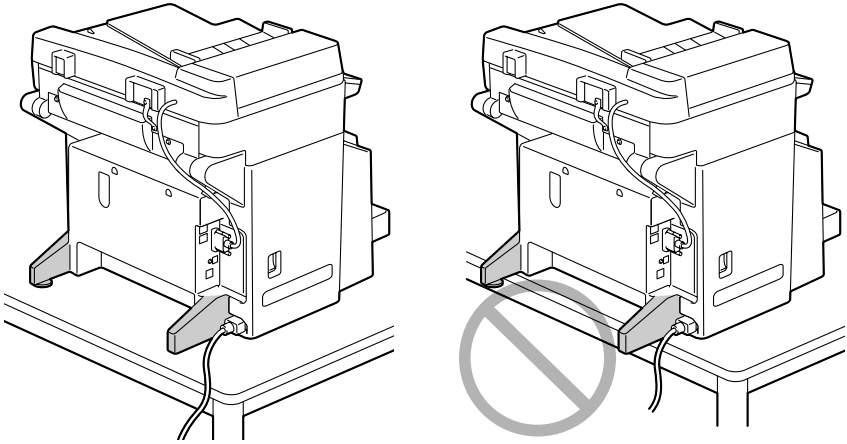

Part Names

The following drawings illustrate the parts of your machine referred to throughout this guide, so please take some time to become familiar with them.

Front View

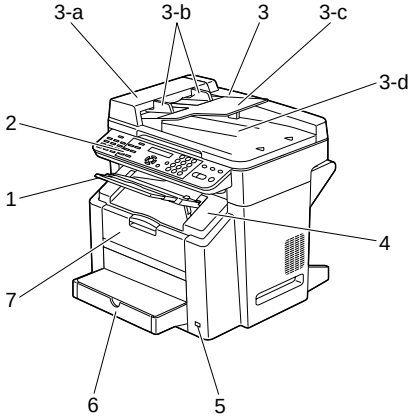

1. Output bin
2. Control panel
3. Automatic Document Feeder (ADF)
   3-a. ADF feed cover
   3-b. Document guide
   3-c. Document feed tray
   3-d. Document output tray

   The ADF may appear as "document cover" in status and error messages.
4. Engine cover
5. Digital Camera Direct Photo Print port
6. Tray 1 (Multipurpose tray)
7. Front cover
8. Original glass
9. Original cover pad
10. Scanner unit
11. Scanner unit release lever

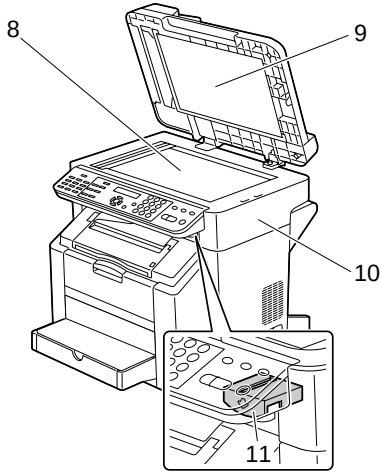

Rear View

1. Power switch
2. TEL (telephone) jack
3. LINE (telephone line) jack
4. USB port
5. 10Base-T/100Base-TX (IEEE 802.3) Ethernet Interface port

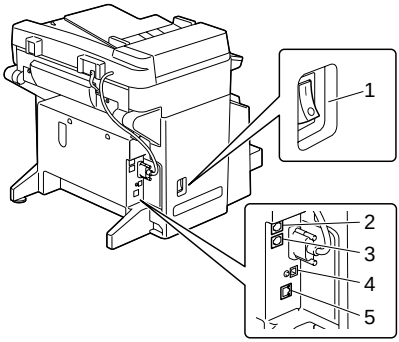

Inside

1. Fuser unit
2. Fuser separator levers
3. Transfer belt unit
4. Drum cartridge
5. Toner cartridge carousel (containing 4 toner cartridges: C, M, Y and K)
6. Scanner lock
7. Toner cartridge

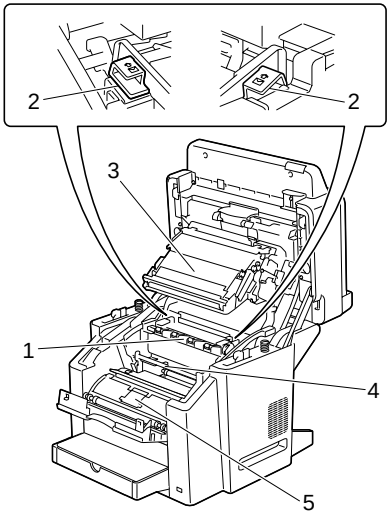

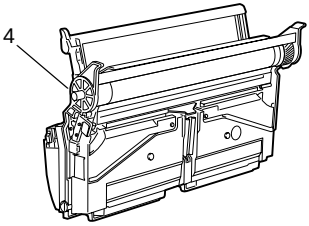

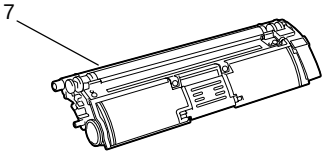

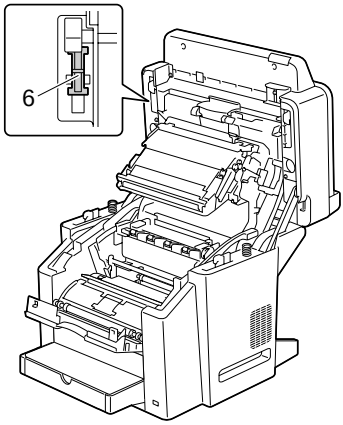

Front View with Options

1. Tray 2

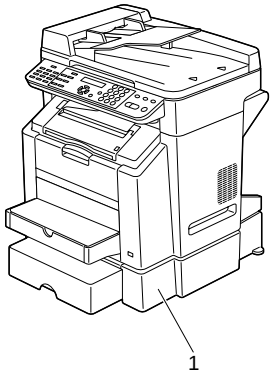

Rear View with Options

1. Duplex option

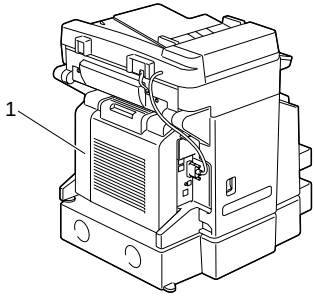

Drivers and Documentation CD-ROM

Printer Drivers

Drivers	Use/Benefit
Printer Driver for Windows XP/ Server 2003/2000/Me/98SE	These drivers give you access to all of the printer features, including finishing and advanced layout. See also “Displaying Printer Driver Settings” on page 74.

Scanner Drivers

Drivers	Use/Benefit
TWAIN Driver for Windows XP/Server 2003/2000	This drivers enables you to set scanning functions, such as the color setting and size adjustments. For details, refer to “Scanner Driver Settings” on page 97.
TWAIN Driver for Windows Me/98SE	

For details on the installation of the drivers, refer to the magicolor 2490MF Installation Guide on the Drivers and Documentation CD-ROM.

Applications CD-ROM

Applications

Applications	Use/Benefit
FaxTalk Communicator	This software allows the fax functions of the computer to be used for faxing image data scanned using the Scan to PC operation. For details, refer to the FaxTalk Communicator User's Guide on the Applications CD-ROM. In addition, refer to the Help for FaxTalk Communicator.
Local Setup Utility (LSU)	This software enables one-touch dialing, speed dialing, and group dialing for faxes to be created and edited from the computer. In addition, the status of this machine can be checked.
PaperPort SE	This software is a document management software package that helps you scan, organize, access, share, and manage both your paper and digital documents on your personal computer. For details, refer to the PaperPort SE User's Guide from the Help menu.

Utility

Utility	Use/Benefit
PageScope Web Connection	With the web browser, the status of printers can be checked, and each setting can be changed. For details, refer to the magicolor 2490MF Reference Guide.

System Requirements

- Personal computer
  Pentium 2: 400 MHz or higher
- Operating System
  - Microsoft Windows XP Home/Professional Edition, Windows Server 2003, Windows 2000, Windows Me, Windows 98SE
- Free hard disk space
  256 MB or more
- RAM
  128 MB or more
- CD-ROM/DVD drive
- I/O interface
  - 10Base-T/100Base-TX (IEEE 802.3) Ethernet interface port
  - USB Revision 2.0 and USB Revision 1.1 compliant port

The Ethernet cable and USB cable are not included with the machine.

2

Control Panel and Configuration Menu

About the Control Panel

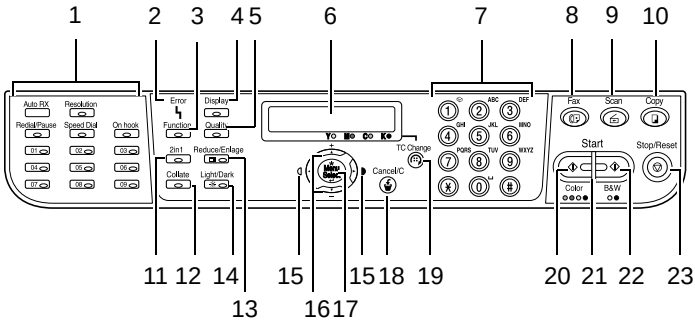

Control Panel Indicators and Keys

No.	Name	Function
1	Fax Operations keys	Provides fax operations. For details, refer to the magicolor 2490MF Facsimile User's Guide.
2	**Error** indicator	Lights up when an error has occurred.
3	**Function** key	Press to specify tray settings, duplex (Double-Sided) printing settings, and ID card copy settings. *The tray settings and duplex (Double-Sided) printing settings cannot be specified if the optional media feed unit and duplex are not installed.*

No.	Name	Function
4	**Display** key	Press to check the status of this machine and the specified settings. ■ Displays a rough estimate of the amount of toner remaining. ■ Displays the total number of pages that have been copied, printed and scanned. ■ Displays the results for fax transmissions and receptions. ■ Prints the machine settings, lists and reports related to faxing. For details, refer to “Checking the Machine Status and Settings” on page 17.
5	**Quality** key	Press to specify the document type to be copied and the resolution.
6	Message Window	■ Displays information such as the media type, copy density, and zoom ratio. For details, refer to “Display Indications” on page 14. ■ Displays an error message when an error occurs. For details on error messages, refer to “Status, Error, and Service Messages” on page 175.
7	Keypad	Type in values such as the desired number of copies.
8	**Fax** key	Press to enter Fax mode. The key lights up in green while the machine is in Scan mode. For details, refer to the magicolor 2490MF Facsimile User's Guide.
9	**Scan** key	Press to enter scan mode. (only with a network) The key lights up in green while the machine is in Scan mode. For details, on the Scanner functions, refer to chapter 7, “Using the Scanner”
10	**Copy** key	Press to enter Copy mode. The key lights up in green while the machine is in Copy mode. For details on the Copy functions, refer to chapter 6, “Using the Copier”.
11	**2in1** key	Press to specify 2in1 copying.
12	**Collate** key	Press to specify collated copying.

No.	Name	Function
13	**Reduce/ Enlarge** key	Press to specify reduced/enlarged copying with preset zoom ratios.
14	**Light/Dark** key	Press to select the copy density.
15	◀/▶ keys	■ Press to move left and right through the setting screens, such as the configuration menu. ■ Press to select the copy density.
16	▲/▼ keys	■ Press to move up and down through the setting screens, such as the configuration menu. ■ Press to specify the zoom ratio in 0.01 increments. (Setting range: 0.50 to 2.00)
17	**Menu Select** key	■ Press to display the configuration menu. ■ Press to select the setting that is currently displayed.
18	**Cancel/C** key	■ Press to cancel the setting that is currently displayed. ■ Press to clear the specified number of copies. ■ Press to return to the first screen of a menu item or to the main screen. ■ Press to cancel printing from the print screen.
19	**TC Change** key	Press to display the message for replacing the toner cartridge. For details on replacing the toner cartridge, refer to “Replacing the Toner Cartridge” on page 110.
20	**Start-Color** key	Press to begin full-color copying.
21	**Start** indicator	Lights up in green when copying is possible. Lights up in orange if copying is not possible, for example, during warm-up or if an error has occurred.

No.	Name	Function
22	**Start-B&W** key	Press to begin monochrome copying.
23	**Stop/Reset** key	■ Press to stop copying, scanning, and faxing. ■ Press to return the following to their default settings. – Copy quality – Copy density – Zoom ratio – Collate – Number of copies – Tray select ■ Press to cancel the following functions. – 2in1 copy – Duplex copy – ID card copy ■ Press to cancel toner replacing after the **TC Change** key is pressed.

Display Indications

Main Screen

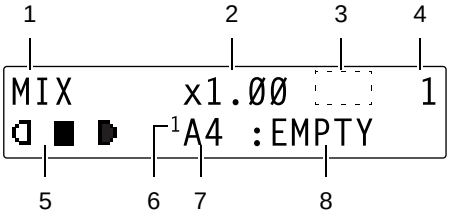

No.	Indication	Description
1	Document type	Indicates the document type to be copied specified either with the Quality key or from the configuration menu.
2	Zoom ratio	Indicates the zoom ratio.
3	Icons that appear with copy operations	: Appears when 2in1 copying is set. : Appears when duplex (Double-Sided) copying is set. : Appears when collated copying is set. For details, refer to “Making Advanced Copies” on page 88.
4	Number of copies	Indicates the number of copies.
5	Copy density	Indicates the copy density. [A] appears when the following settings are specified. ■ The **Quality** key was pressed to select TEXT. ■ AUTO is selected while 1 MODE on the COPY SETTING menu is set to TEXT.
6	Media tray	Indicates the media tray that is selected.

No.	Indication	Description
7	Media size	Indicates the media size that is selected. Change the paper size from the PAPER SOURCE menu. For details, refer to “PAPER SOURCE SETUP Menu” on page 27.
8	Status	Displays messages such as when media is empty.

Print Screen

When a print job is received, PC:PRN appears in the status section of the main screen. To display the print screen, press the **Display** key, then the ▶ key, while PC:PRN is displayed. (The following screen appears.)

To cancel printing, press the **Cancel/C** key when the print screen appears. Then, select YES, and press the **Menu Select** key.

```
*PC PRINT*
 PRINTING     1A4
```

1 2

No.	Indication	Description
1	Status	Displays messages indicating operations such as printing.
2	Media tray/ media size	Indicates the media tray and media size that is selected.

Checking the Machine Status and Settings

Press the **Display** key to check the status of this machine and the specified settings.

Press the **Display** key to switch between each item to be checked. Alternatively, the ▲ and ▼ keys can be pressed.

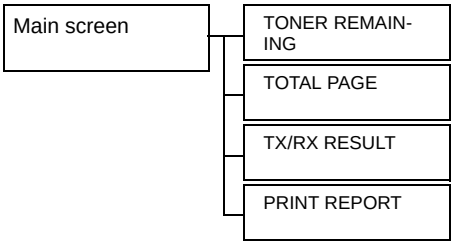

TONER REMAINING

This screen provides a rough estimate of the amount of toner remaining.

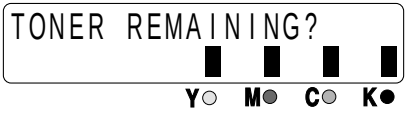

To return to the main screen, press the **Cancel/C** key.

TOTAL PAGE

The total number of pages for each of the following can be checked.

B/W COPY	This counter shows the total number of pages copied in black-and-white.
COLOR COPY	This counter shows the total number of pages copied in color.
B/W PRINT	This counter shows the total number of pages printed in black-and-white.
COLOR PRINT	This counter shows the total number of pages printed in color.

FAX PRINT	This counter shows the total number of pages that were faxed.
TOTAL SCAN	This counter shows the total number of document pages that were scanned.

TX/RX RESULT

The results of a maximum of 60 fax transmissions/receptions can be viewed. In addition, the transmission/reception results that are displayed can be printed by pressing the **Start-B&W** key. For details, refer to the magicolor 2490MF Facsimile User's Guide.

PRINT REPORT

The machine settings, lists and reports related to faxing can be printed.

TX RESULT REPORT	Prints the results of fax transmissions. For details, refer to the magicolor 2490MF Facsimile User's Guide.
RX RESULT REPORT	Prints the results of fax receptions. For details, refer to the magicolor 2490MF Facsimile User's Guide.
ACTIVITY REPORT	Prints the results of fax transmissions and receptions. For details, refer to the magicolor 2490MF Facsimile User's Guide.
MEMORY DATA LIST	Prints the information for queued fax transmissions. For details, refer to the magicolor 2490MF Facsimile User's Guide.
MEMORY IMAGE PRINT	Prints the information and a reduced first page of queued fax transmissions. For details, refer to the magicolor 2490MF Facsimile User's Guide.
ONE-TOUCH LIST	Prints a list of the destinations programmed for one-touch dialing. For details, refer to the magicolor 2490MF Facsimile User's Guide.
SPEED DIAL LIST	Prints a list of the destinations programmed for speed dialing. For details, refer to the magicolor 2490MF Facsimile User's Guide.
GROUP DIAL LIST	Prints a list of the one-touch dialing groups. For details, refer to the magicolor 2490MF Facsimile User's Guide.
MENU MAP	Prints the configuration menu and its settings.

CONFIGURATION PAGE	Prints a rough estimate of the parcentage of toner remaining and the settings, information and status of this machine.
DEMO PAGE	Prints a demo page.

Functions Available With the Function Key

Press the **Function** key to specify tray settings, duplex (Double-Sided) copying and ID card copy settings.

*To specify tray settings, duplex (Double-Sided) copying and ID card copy settings, press the **Copy** key while the **Fax** key or **Scan** key is lit up in green.*

*For details on the functions available with the **Function** key in Fax mode, refer to the magicolor 2490MF Facsimile User's Guide.*

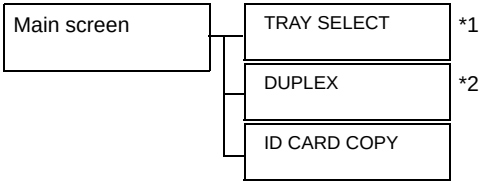

*1 Cannot be set if the optional Tray 2 is not installed.

*2 Cannot be set if the duplex option is not installed.

1 TRAY SELECT	Setting	**TRAY1** / TRAY2
	Select the tray. For details, refer to "Selecting the Media Tray" on page 87.	
2 DUPLEX	Setting	**OFF** / LONG EDGE / SHORT EDGE
	Select the setting for duplex (Double-Sided) copying. For details, refer to "Setting Duplex (Double-Sided) Copying" on page 91.	
3 ID CARD COPY	Setting	**OFF** / ON
	Select the setting for ID card copying. For details, refer to "ID Card Copying" on page 89.	

Configuration Menu Overview

The magicolor 2490MF configuration menu accessible from the control panel is structured as shown below.

Configuration Menu

*Press **Menu Select** key to enter the configuration menu. Press the **Cancel/C** key to return to the first screen of a menu item or to the main screen.*

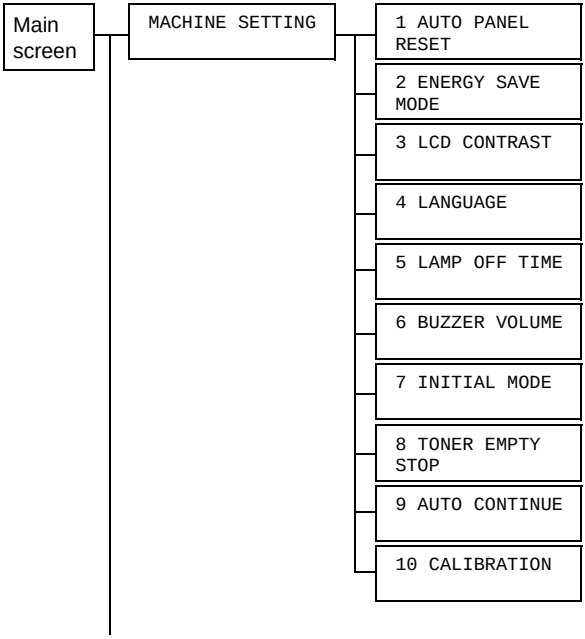

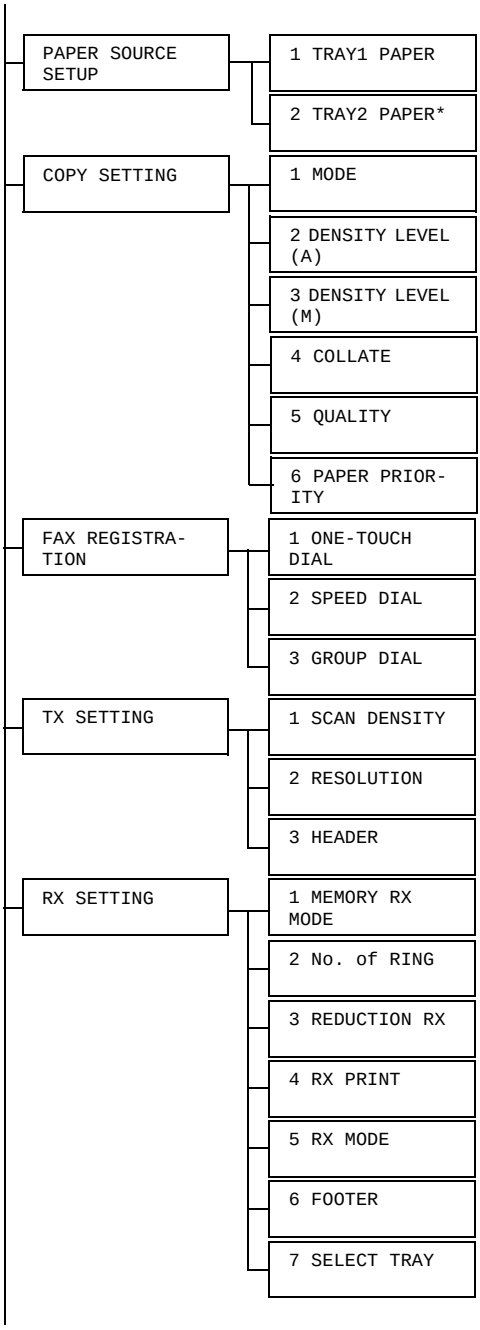

*Displays only if the optional Tray 2 is installed.

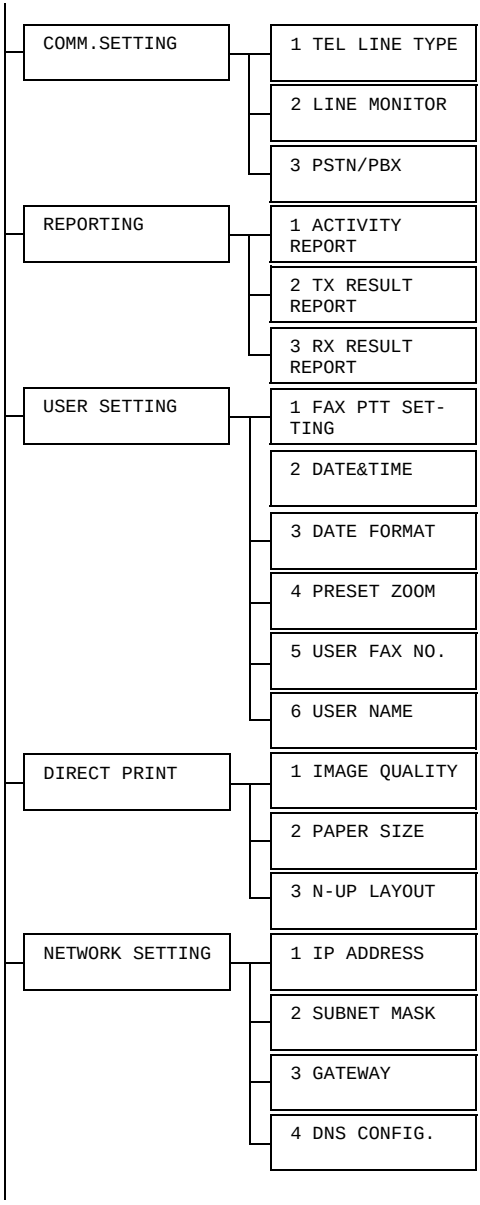
COMM.SETTING
1 TEL LINE TYPE
2 LINE MONITOR
3 PSTN/PBX
REPORTING
1 ACTIVITY REPORT
2 TX RESULT REPORT
3 RX RESULT REPORT
USER SETTING
1 FAX PTT SET-TING
2 DATE&TIME
3 DATE FORMAT
4 PRESET ZOOM
5 USER FAX NO.
6 USER NAME
DIRECT PRINT
1 IMAGE QUALITY
2 PAPER SIZE
3 N-UP LAYOUT
NETWORK SETTING
1 IP ADDRESS
2 SUBNET MASK
3 GATEWAY
4 DNS CONFIG.

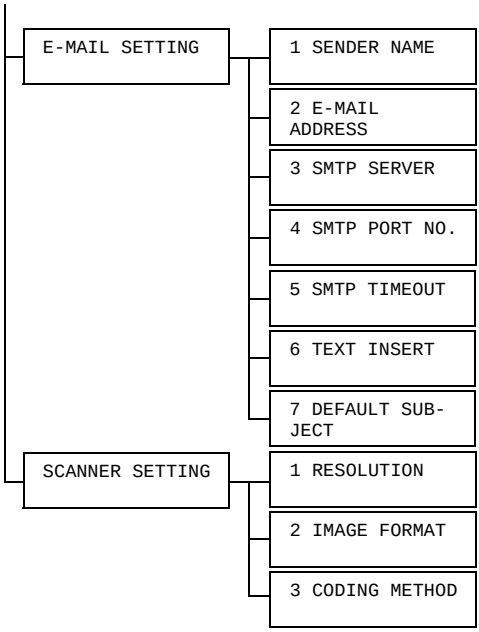
E-MAIL SETTING
1 SENDER NAME
2 E-MAIL ADDRESS
3 SMTP SERVER
4 SMTP PORT NO.
5 SMTP TIMEOUT
6 TEXT INSERT
7 DEFAULT SUB-JECT
SCANNER SETTING
1 RESOLUTION
2 IMAGE FORMAT
3 CODING METHOD

MACHINE SETTING Menu

Manufacturer's default settings appear in bold.

1 AUTO PANEL RESET	Setting	**ON** / OFF
	Select whether or not all settings in the control panel return to their default settings when no operation is performed for a set length of time. If ON is selected, select from 0.5, 1, 2, 3, 4, and 5 (units: minutes; default: 1) for the length of time until the auto panel reset operation is performed. If OFF is selected, the auto panel reset operation is not performed.	
2 ENERGY SAVE MODE	Setting	5 / 15 / **30** / 60
	Enters Energy Save mode in order to conserve energy when no operation is performed. Specify the length of time in minutes until the machine enters Energy Save mode.	
3 LCD CONTRAST	Setting	LIGHT DARK
	Specify the brightness of the message window.	
4 LANGUAGE	Setting	**ENGLISH** / FRENCH / GERMAN / ITALIAN / SPANISH / PORTUGUESE / RUSSIAN / CZECH / SLOVAKIAN / HUNGARIAN / POLISH / JAPANESE
	Select the language of the menus and messages that appear in the message window.	
5 LAMP OFF TIME	Setting	**MODE1** / MODE2
	Select the length of time until the scanner unit lamp goes off when no operation is performed. If MODE1 is selected, the lamp goes off when the machine enters Energy Save mode. If MODE2 is selected, the lamp goes off 10 minutes after the machine enters Energy Save mode.	
6 BUZZER VOLUME	Setting	HIGH / **LOW** / OFF
	Select the volume of the sound produced when a key is pressed and of the alarm that is sounded when an error occurs.	

7 INITIAL MODE	Setting	**COPY** / FAX
	Specify the default mode when the machine is turned on or when all settings in the control panel return to their default settings.	
8 TONER EMPTY STOP	Setting	**ON** / ON(FAX) / OFF
	Select whether or not printing, copying and faxing stop when the toner has run out. If ON is selected, printing, copying and faxing stop when the toner runs out. If ON (FAX) is selected, only faxing stops when the toner runs out. If OFF is selected, printing, copying and faxing do not stop when the toner runs out.	
9 AUTO CON-TINUE	Setting	ON / **OFF**
	Select whether or not printing continues when a size error occurs during printing.	
10 CALIBRA-TION	Setting	ON / **OFF**
	Select whether or not to perform image stabilization. If ON is selected, image stabilization is started.	

PAPER SOURCE SETUP Menu

Manufacturer's default settings appear in bold.

1 TRAY1 PAPER	Media type	**PLAIN PAPER** / TRANSPARENCY / LABELS / LETTERHEAD / ENVELOPE / POSTCARD / THICK PAPER / GLOSSY
	Media size	When a setting other than ENVELOPE or POSTCARD is selected: **A4** / B5 / A5 / LEGAL / **LETTER** / G LETTER / STATEMENT / EXECUTIVE / FOLIO (If TRANSPARENCY, LABELS, THICK PAPER or GLOSSY is selected, LEGAL and FOLIO are not displayed.) When ENVELOPE is selected: **COM10** / C5 / C6 / DL / MONARCH / CHOU #3 / YOU #4 / CHOU #4 When POSTCARD is selected: **J-POSTCARD** / DOUBLE POSTCARD
	Select the type and size of the media loaded into Tray 1. When a media type is selected, a screen appears, showing the available media sizes. The available media sizes differ depending on the selected media type. The default paper size for a setting other than ENVELOPE or POSTCARD is LETTER for 120 V models, and A4 for 220 V models.	
2 TRAY2 PAPER	Media size	**LETTER** / **A4**
	Select the size of the media loaded into Tray 2. Only plain paper can be loaded into Tray 2. The default paper size is LETTER for 120 V models, and A4 for 220 V models.	

COPY SETTING Menu

Manufacturer's default settings appear in bold.

1 MODE	Setting	**MIX** / TEXT / PHOTO
	Select the type of document being copied. After selecting TEXT, set the copy density to either AUTO or MANUAL.	
2 DENSITY LEVEL(A)	Setting	LIGHT ◁□■□▷ DARK
	Adjust the density of the background color.	
3 DENSITY LEVEL(M)	Setting	LIGHT ◁□□□■□□□▷ DARK
	Specify the default copy density.	
4 COLLATE	Setting	ON / **OFF**
	Select whether or not collated copying is given priority.	
5 QUALITY	Setting	**NORMAL** / FINE
	Select the printing resolution.	
6 PAPER PRIORITY	Setting	**TRAY1** / TRAY2
	Select the whether Tray 1 or Tray 2 is given priority for use. *If Tray 2 is not installed, *NOT AVAILABLE* appears.*	

*Settings for 1 MODE and 5 QUALITY can also be specified using the **Quality** key.*
*Press the **Quality** key once to display the setting for 1 MODE.*
*Press the **Quality** key twice to display the setting for 5 QUALITY.*

*Settings for 3 DENSITY LEVEL(M) can also be specified using the **Light/Dark** key.*

*Settings for 4 COLLATE can also be specified using the **Collate** key.*

*Settings for 6 PAPER PRIORITY can also be specified by pressing the **Function** key, then selecting 1 TRAY SELECT.*

FAX REGISTRATION Menu

1 ONE-TOUCH DIAL	Register fax destinations for one-touch dialing, speed dialing, and group dialing. For details, refer to the magicolor 2490MF Facsimile User's Guide.
2 SPEED DIAL	
3 GROUP DIAL	

TX SETTING Menu

1 SCAN DEN-SITY	Specify settings for sending faxes. For details, refer to the magicolor 2490MF Facsimile User's Guide.
2 RESOLUTION	
3 HEADER	

RX SETTING Menu

1 MEMORY RX MODE	Specify settings for receiving faxes. For details, refer to the magicolor 2490MF Facsimile User's Guide.
2 NO. of RINGS	
3 REDUCTION RX	
4 RX PRINT	
5 RX MODE	
6 FOOTER	
7 SELECT TRAY	

COMM. SETTING Menu

1 TEL LINE TYPE	Specify the connection settings for faxing. For details, refer to the magicolor 2490MF Facsimile User's Guide.
2 LINE MONI-TOR	
3 PSTN/PBX	

REPORTING Menu

1 ACTIVITY REPORT	Specify the settings for printing the fax report. For details, refer to the magicolor 2490MF Facsimile User's Guide.
2 TX RESULT REPORT	
3 RX RESULT REPORT	

USER SETTING Menu

Manufacturer's default settings appear in bold.

1 FAX PTT SETTING	Select the country where this machine is installed. For details, refer to the magicolor 2490MF Facsimile User's Guide. *If the country is changed, settings for other functions may also be changed.*	
2 DATE&TIME	Specify the date and time. Specify the time in the 24-hour format. Use the keypad to specify the settings. For details, refer to the magicolor 2490MF Facsimile User's Guide.	
3 DATE FORMAT	Specify the order of the year, month and day specified in 2 DATE&TIME. For details, refer to the magicolor 2490MF Facsimile User's Guide.	
4 PRESET ZOOM	Setting	**INCH** / METRIC
	Select whether the preset zoom ratios are set in inches or millimeters. The default setting for USA and Canada is INCH, and the default setting for other countries is METRIC.	
5 USER FAX NO.	Enter your fax number. For details, refer to the magicolor 2490MF Facsimile User's Guide.	
6 USER NAME	Enter your name. For details, refer to the magicolor 2490MF Facsimile User's Guide.	

DIRECT PRINT Menu

Manufacturer's default settings appear in bold.

Camera settings may be given priority, depending on the settings specified on this machine.

1 IMAGE QUALITY	Setting	**DRAFT** / NORMAL / FINE
	Select the resolution for Camera Direct Photo Printing. DRAFT = 600 dpi × 600 dpi; NORMAL = 1200 dpi × 600 dpi; FINE = 2400 dpi × 600 dpi	
2 PAPER SIZE	Tray	**TRAY1** / TRAY2
	Media type	If TRAY1 is selected, select the paper type. **PLAIN PAPER** / LABELS / POST CARD / THICK PAPER / GLOSSY
	Media size	If TRAY2 is selected, only A4 or LETTER can be selected. **A4** / B5 / A5 / **LETTER** / STATEMENT If POSTCARD is selected, J-POSTCARD can be selected. If GLOSSY is selected, PHOTO SIZE 4×6, PHOTO SIZE 10×15, LTR 2UP SPL, A4 4UP SPL or A4 2UP SPL can be selected.
	Select the tray, media type, and media size for Camera Direct Photo Printing.	
3 N-UP LAYOUT	Setting	**1** / 2 / 3 / 4 / 6 / 8
	Select the number of images that will be printed on a single sheet of media.	

NETWORK SETTING Menu

Manufacturer's default settings appear in bold.

1 IP ADDRESS	Setting	**AUTO** / SPECIFY
	Select whether to automatically retrieve the IP address or to specify a fixed IP address. Consult your network administrator for information about the IP address to use.	
2 SUBNET MASK	Enter the subnet mask of the network to be connected. When IP ADDRESS is set to AUTO, this menu option cannot be set.	
3 GATEWAY	Enter the gateway address of the network to be connected. When IP ADDRESS is set to AUTO, this menu option cannot be set.	
4 DNS CONFIG.	Setting	**DISABLE** / ENABLE
	Specify ENABLE or DISABLE for the DNS (Domain Name System).	

*To edit or erase entered characters, press the **Cancel/C** key. To cancel a setting, hold down the **Cancel/C** key until, erase all characters, and then press the **Cancel/C** key again.*

E-MAIL SETTING Menu

Manufacturer's default settings appear in bold.

1 SENDER NAME	Enter your name as the sender's name. A maximum of 20 characters can be entered. The default sender name is "magicolor 2490MF".	
2 E-MAIL ADDRESS	Type in the email address of the email sender when using network scanning. A maximum of 64 characters can be entered.	
3 SMTP SERVER	Type in the IP address or host name for the SMTP server. A maximum of 64 characters can be entered.	
4 SMTP PORT NO.	Settings	1-65535 (Default : 25)
	Specify the number of the port communicating with the SMTP server.	
5 SMTP TIME-OUT	Settings	30-300 (Default : 60)
	Enter the amount of time (in seconds) until the connection with the SMTP server times out.	
6 TEXT INSERT	Settings	ON / **OFF**
	Select whether or not the previously specified text is inserted into the body of the email message when using network scanning. ■ ON: The following text is inserted as the body of the email message. Image data(TIFF format) has been attached to the email. ■ OFF: Only the scanned image is attached, and no text is inserted into the email message.	
7 DEFAULT SUBJECT	Specify the subject of the email message when using network scanning. A maximum of 20 characters can be entered. The default subject is "From mc2490MF".	

*To edit or erase entered characters, press the **Cancel/C** key. To cancel a setting, hold down the **Cancel/C** key until, erase all characters, and then press the **Cancel/C** key again.*

SCANNER SETTING Menu

Manufacturer's default settings appear in bold.

1 RESOLUTION	Setting	150×150 / **300×300** / 600×600
	Select the default scanning resolution for scan to email operations.	
2 IMAGE FORMAT	Setting	**TIFF** / PDF
	Select the default format for saving files with scan to email operations. *PDF data can be opened in Adobe Acrobat Reader.* *TIF files of images that have been scanned with the Color or Gray setting cannot be opened with the Windows Picture and FAX Viewer, which is included with Windows XP as a standard component. These files can be opened with image-processing applications such as PhotoShop, Microsoft Office Document Imaging or ACDsee.*	
3 CODING METHOD	Setting	**MH** / MR / MMR
	Select the default compression method for scan to email operations. With MMR, the compression ratio is higher, but the recipient's fax machine may be incompatible. With MH, the compression ratio is lower, but most fax machines are compatible. Select the setting suitable for the recipient's fax machine.	

Media Handling

3

Print Media

Specifications

Media	Media Size		Tray*	Duplex	Copy	Print	Direct Print	FAX
	Inch	Millimeter						
A4	8.2 x 11.7	210.0 x 297.0	1/2	Yes	Yes	Yes	Yes	Yes
B5 (JIS)	7.2 x 10.1	182.0 x 257.0	1	No	Yes	Yes	Yes	No
A5	5.9 x 8.3	148.0 x 210.0	1	No	Yes	Yes	Yes	No
Legal	8.5 x 14.0	215.9 x 355.6	1	No	Yes	Yes	No	Yes
Letter	8.5 x 11.0	215.9 x 279.4	1/2	Yes	Yes	Yes	Yes	Yes
Statement	5.5 x 8.5	140.0 x 216.0	1	No	Yes	Yes	No	No
Executive	7.25 x 10.5	184.0 x 267.0	1	No	Yes	Yes	No	No
Folio	8.3 x 13.0	210.0 x 330.0	1	No	Yes	Yes	No	No
Letter Plus	8.5 x 12.69	215.9 x 322.3	1	No	No	Yes	No	No
UK Quarto	8.0 x 10.0	203.2 x 254.0	1	No	No	Yes	No	No
Foolscap	8.0 x 13.0	203.2 x 330.2	1	No	No	Yes	No	No
Government Legal	8.5 x 13.0	216.0 x 330.0	1	No	No	Yes	No	No
Kai 16	7.3 x 10.2	185.0 x 260.0	1	No	No	Yes	No	No
Kai 32	5.1 x 7.3	130.0 x 185.0	1	No	No	Yes	No	No
Government letter	8.0 x 10.5	203.2 x 266.7	1	No	Yes	Yes	No	No
16 K	7.7 x 10.6	195.0 x 270.0	1	No	No	Yes	No	No
Photo size 4x6"	4.0 x 6.0	101.6 x 152.4	1	No	No	Yes	Yes	No
Photo size 10x15	3.9 x 5.9	100.0 x 150.0	1	No	No	Yes	Yes	No
J-Postcard	3.9 x 5.8	100.0 x 148.0	1	No	Yes	Yes	Yes	No
Double Postcard	5.8 x 7.9	148.0 x 200.0	1	No	Yes	Yes	No	No
B5 (ISO)	6.9 x 9.8	176.0 x 250.0	1	No	Yes	Yes	No	No
Envelope #10	4.125 x 9.5	104.7 x 241.3	1	No	Yes	Yes	No	No
Envelope C5	6.4 x 9.0	162.0 x 229.0	1	No	Yes	Yes	No	No
Envelope DL	4.3 x 8.7	110.0 x 220.0	1	No	Yes	Yes	No	No
Envelope Monarch	3.875 x 7.5	98.4 x 190.5	1	No	Yes	Yes	No	No
Envelope C6	4.5 x 6.4	114.0 x 162.0	1	No	Yes	Yes	No	No
Envelope Chou #3	4.7 x 9.2	120.0 x 235.0	1	No	Yes	Yes	No	No
Envelope Chou #4	3.5 x 8.1	90.0 x 205.0	1	No	Yes	Yes	No	No
Envelope You #4	4.1 x 9.3	105.0 x 235.0	1	No	Yes	Yes	No	No
Custom, Minimum	3.6 x 5.8	92.0 x 148.0	1	No	No	Yes	No	No
Custom, Maximum	8.5 x 14.0	216.0 x 356.0	1	No	No	Yes	No	No
Thick Stock—Only supported for letter, A4, and smaller media.								
Notes: *Tray 1 = Multipurpose Tray 2 = Plain paper only								

Types

Before purchasing a large quantity of special media, do a trial print with the same media and check the print quality.

Keep media on a flat, level surface in its original wrapper until it is time to load it. For a list of approved media, refer to printer.konicaminolta.com.

Plain Paper (Recycled Paper)

Capacity	**Tray 1**	Up to 200 sheets, depending on the media weight
	Tray 2	Up to 500 sheets, depending on the media weight
Driver Media Type	Plain Paper	
Weight	60 to 90 g/m² (16 to 24 lb bond)	
Duplexing	Supported	

Use plain paper that is

- Suitable for plain paper printers and copiers, such as standard or recycled office paper.

Note

Do not use the media types listed below. These could cause poor print quality, media misfeeds, or damage to the machine.

DO NOT use media that is

- Coated with a processed surface (such as carbon paper and colored paper that has been treated)
- Carbon backed
- Unapproved iron-on transfer media (such as heat-sensitive paper, heat-pressure paper, and heat-press transfer paper)
- Cold-water-transfer paper
- Pressure sensitive
- Designed specifically for inkjet printers (such as superfine paper, glossy film, and postcards)
- Already been printed on by another printer, copier, or fax machine
- Dusty

- Wet (or damp)

  Keep media between 35% and 85% relative humidity. Toner does not adhere well to moist or wet media.

- Layered
- Adhesive
- Folded, creased, curled, embossed, warped, or wrinkled
- Perforated, three-hole punched, or torn
- Too slick, too coarse, or too textured
- Different in texture (roughness) on the front and back
- Too thin or too thick
- Stuck together with static electricity
- Composed of foil or gilt; too luminous
- Heat sensitive or cannot withstand the fusing temperature (180°C [356°F])
- Irregularly shaped (not rectangular or not cut at right angles)
- Attached with glue, tape, paper clips, staples, ribbons, hooks, or buttons
- Acidic
- Any other media that is not approved

Thick Stock

Paper thicker than 90 g/m^2 (24 lb bond) is referred to as thick stock. Test all thick stock to ensure acceptable performance and to ensure that the image does not shift.

You can print continuously with thick stock. However, this could affect the media feed, depending on the media quality and printing environment. If problems occur, stop the continuous printing and print one sheet at a time.

Capacity	**Tray 1**	Up to 50 sheets, depending on their thickness
	Tray 2	Not supported
Driver Media Type	Thick Stock	
Weight	91 to 163 g/m^2 (25 to 43 lb bond)	
Duplexing	Not supported	

43 lb bond is also referred to as 90 lb index stock.

DO NOT use thick stock that is

- Mixed with any other media in the trays (as this will cause media misfeeding)

Envelope

Print on the front (address) side only. Some parts of the envelope consist of three layers of paper—the front, back, and flap. Anything printed in these layered regions may be lost or faded.

You can print continuously with envelope. However, this could affect the media feed, depending on the media quality and printing environment. If problems occur, stop the continuous printing and print one sheet at a time.

Capacity	**Tray 1**	Up to 10 sheets, depending on their thickness
	Tray 2	Not supported
Driver Media Type	Envelope	
Duplexing	Not supported	

43 lb bond is also referred to as 90 lb index stock.

Use envelopes that are

- Common office envelopes approved for laser printing with diagonal joints, sharp folds and edges, and ordinary gummed flaps

  Because the envelopes pass through heated rollers, the gummed area on the flaps may seal. Using envelopes with emulsion-based glue avoids this problem.

- Approved for laser printing
- Dry

DO NOT use envelopes that have

- Sticky flaps
- Tape seals, metal clasps, paper clips, fasteners, or peel-off strips for sealing
- Transparent windows
- Too rough of a surface
- Material that will melt, vaporize, offset, discolor, or emit dangerous fumes
- Been presealed

Labels

A sheet of labels consists of a face sheet (the printing surface), adhesive, and a carrier sheet:

- The face sheet must follow the plain paper specification.
- The face sheet surface must cover the entire carrier sheet, and no adhesive should come through on the surface.

You can print continuously with label sheets. However, this could affect the media feed, depending on the media quality and printing environment. If problems occur, stop the continuous printing and print one sheet at a time.

Try printing your data on a sheet of plain paper first to check placement. Check your application documentation for more information on printing labels.

Capacity	**Tray 1**	Up to 50 sheets, depending on their thickness
	Tray 2	Not supported
Driver Media Type	Labels	
Duplexing	Not supported	

43 lb bond is also referred to as 90 lb index stock.

Use label sheets that are

- Recommended for laser printing

DO NOT use label sheets that

- Have labels that easily peel off or have parts of the label already removed
- Have backing sheets that have peeled away or have exposed adhesive

Labels may stick to the fuser, causing them to peel off and media misfeeds to occur.

- Are precut or perforated

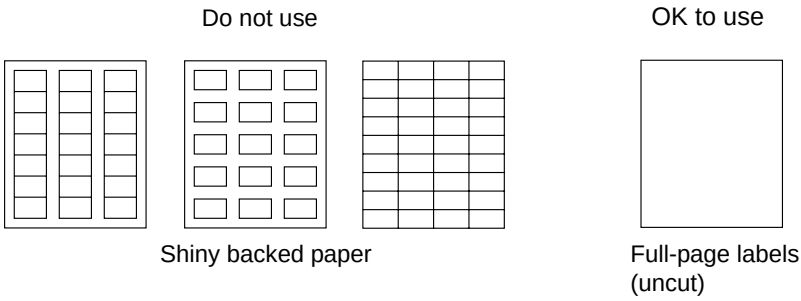

Letterhead

You can print continuously with letterhead. However, this could affect the media feed, depending on the media quality and printing environment. If problems occur, stop the continuous printing and print one sheet at a time.

Try printing your data on a sheet of plain paper first to check placement.

Capacity	**Tray 1**	Up to 50 sheets, depending on their size and thickness
	Tray 2	Not supported
Driver Media Type	Letterhead	
Duplexing	Not supported	

Postcard

You can print continuously with postcard. However, this could affect the media feed, depending on the media quality and printing environment. If problems occur, stop the continuous printing and print one sheet at a time.

Try printing your data on a sheet of plain paper first to check placement.

Capacity	**Tray 1**	Up to 50 sheets, depending on their thickness
	Tray 2	Not supported
Driver Media Type	Postcard	
Duplexing	Not supported	

Use postcards that are

- Approved for laser printing

DO NOT use postcards that are

- Coated
- Designed for inkjet printers
- Precut or perforated
- Preprinted or multicolored

If the postcard is warped, press on the warped area before putting it in Tray 1.

- Folded or wrinkled

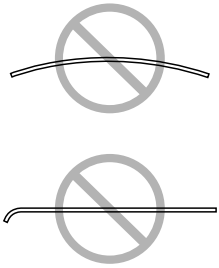

Transparency

Do not fan transparencies before loading them. Resulting static electricity may cause printing errors.

If you touch the face of the transparencies with your bare hands, print quality may be affected.

Keep the media path clean. Transparencies are especially sensitive to a dirty media path. If there are shadows on either the top or the bottom of the sheets, see chapter 9, “Maintenance”.

Remove transparencies as soon as possible from the output bin to avoid static buildup.

You can print continuously with transparencies. However, this could affect the media feed, depending on the media quality, static buildup, and printing environment.

Try printing your data on a sheet of plain paper first to check placement.

If you have problems feeding 50 sheets, try loading only 1–10 sheets at a time. Loading a large number of transparencies at one time may cause static buildup, causing feeding problems.

Capacity	**Tray 1**	Up to 50 sheets, depending on their thickness
	Tray 2	Not supported
Driver Media Type	Transparency	
Duplexing	Not supported	

Always first test a small quantity of a particular type of transparency.

Use transparencies that are

- Approved for laser printing

DO NOT use transparencies that

- Have static electricity that will cause them to stick together
- Are specified for inkjet printers only

Glossy Media

Test all glossy media to ensure acceptable performance and to ensure that the image does not shift.

You can print continuously with glossy media. However, this could affect the media feed, depending on the media quality and printing environment. If problems occur, stop the continuous printing and print one sheet at a time.

Capacity	**Tray 1**	Up to 50 sheets, depending on their thickness
	Tray 2	Not supported
Driver Media Type	Glossy	
Duplexing	Not supported	

DO NOT use glossy media that is

- Mixed with any other media in the trays (as this will cause media misfeeding)
- Specified for inkjet printers only

Guaranteed Imageable (Printable) Area

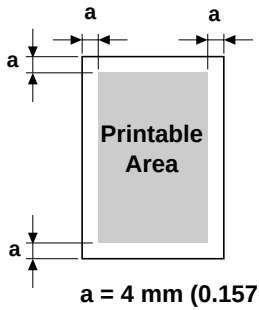

a = 4 mm (0.157")

The printable area on all media sizes is up to 4 mm (0.157") from the edges of the media.

Each media size has a specific imageable area, the maximum area on which the machine can print clearly and without distortion.

This area is subject to both hardware limits (the physical media size and the margins required by the machine) and software constraints (the amount of memory available for the full-page frame buffer). The guaranteed imageable (printable) area for all media sizes is the page size minus 4 mm (0.157") from all edges of the media.

When printing in color on legal-size media, the bottom margin is 18 mm (0.709").

When printing on glossy media, the top margin is 10 mm (0.394").

Imageable Area—Envelopes

Envelopes have a nonguaranteed imageable area that varies with envelope type.

The envelope print orientation is determined by your application.

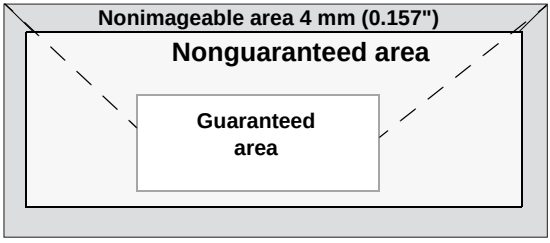

Page Margins

Margins are set through your application. Some applications allow you to set custom page sizes and margins while others have only standard page sizes and margins from which to choose. If you choose a standard format, you may lose part of your image (due to imageable area constraints). If you can custom-size your page in your application, use those sizes given for the imageable area for optimum results.

Loading Media

Take off the top and bottom sheets of a ream of the media. Holding a stack of approximately 200 sheets, fan the stack to prevent static buildup before inserting it in a tray.

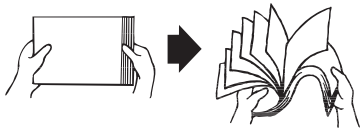

Do not fan transparencies.

Note

Although this machine was designed for printing on a wide range of media types, it is not intended to print exclusively on a single media type except plain paper. Continuous printing on media other than plain paper (such as envelopes, labels, thick stock, transparencies, or glossy media) may adversely affect print quality or reduce engine life.

When refilling media, first remove any media remaining in the tray. Stack it with the new media, even the edges, then reload it.

Do not mix media of different types and sizes, as this will cause media misfeeds.

Tray 1 (Multipurpose Tray)

For details on the types and sizes of media that can be printed from Tray 1, refer to “Specifications” on page 38.

Loading Plain Paper

1

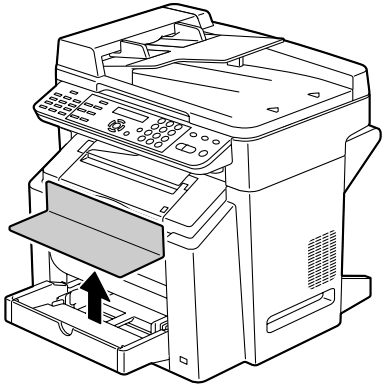

When loading Legal-sized paper in Tray 1, open the front panel of Tray 1.

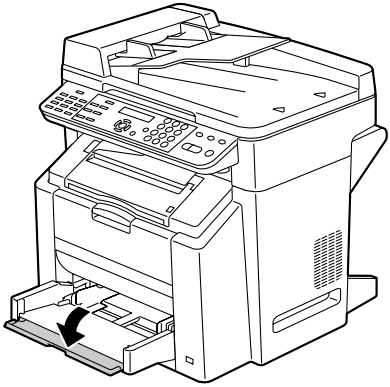

2

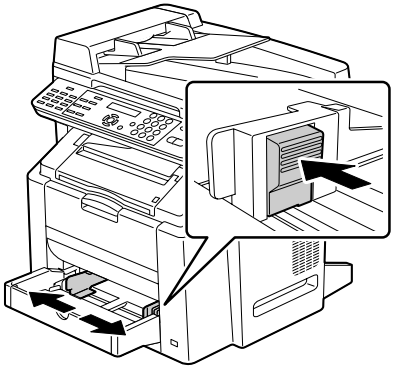

3

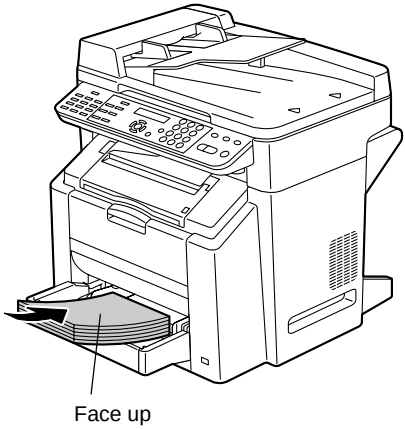

Do not load paper above the ▼mark. Up to 200 sheets (80 g/m^2 [22 lb]) of plain paper can be loaded into the tray at one time.

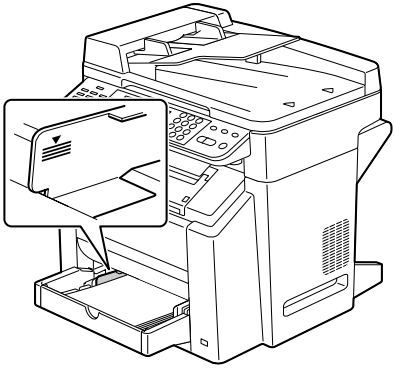

4

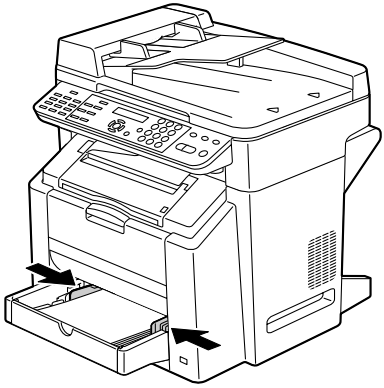

5

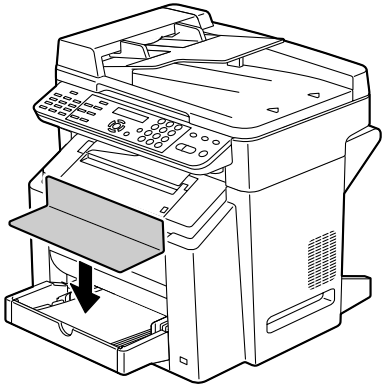

Other Media

When loading media other than plain paper, set the media mode (for example, Envelope, Labels, Thick Stock, or Transparency) in the driver for optimum print quality.

Loading Envelopes

1

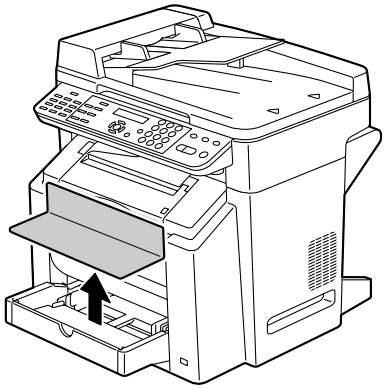

2

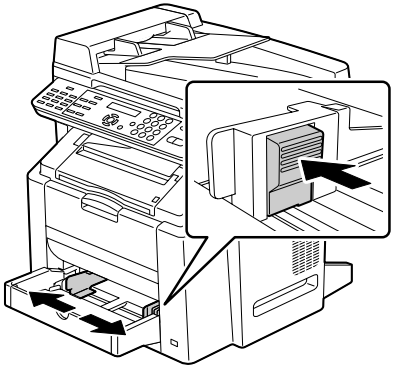

3

Before loading envelopes, press them down to make sure that all air is removed, and make sure that the folds of the flaps are firmly pressed; otherwise the envelopes may become wrinkled or a media misfeed may occur.

Up to 10 envelopes can be loaded into the tray at one time.

For envelopes with the flap along the long edge, load the envelopes with the flap toward the left of the machine.

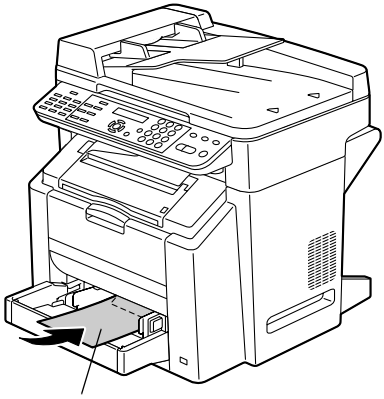

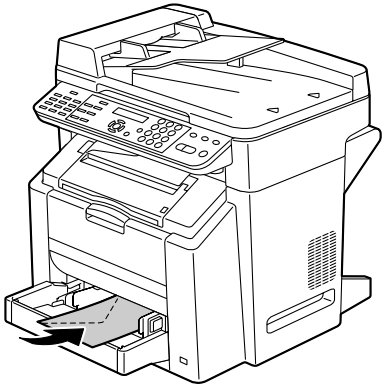

4

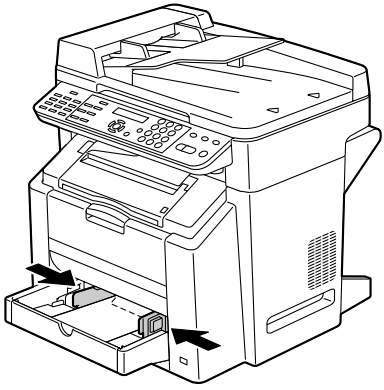

5

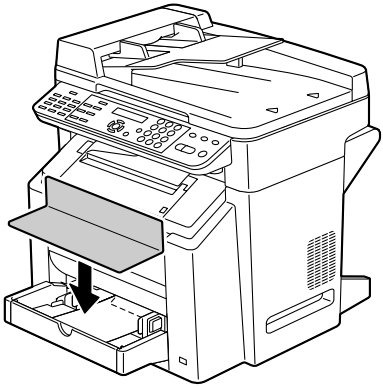

6

Before printing on envelopes, be sure to perform steps 6 through 11.

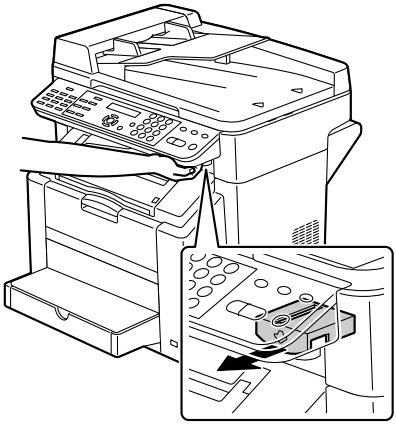

The scanner unit cannot be released if the ADF has been opened. Be sure to gently close the ADF first, then release the scanner unit.

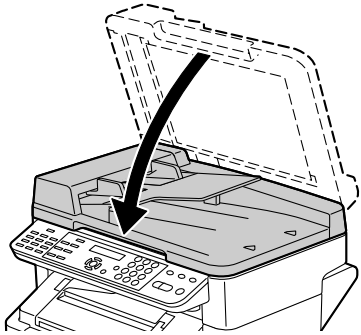

7

Be careful not to touch the plate on the back of the scanner unit.

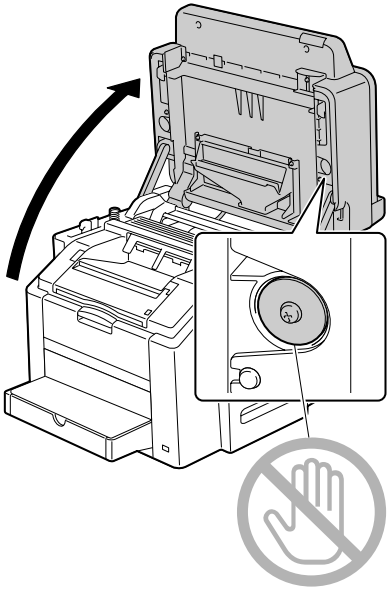

8

Do not touch the transfer belt.

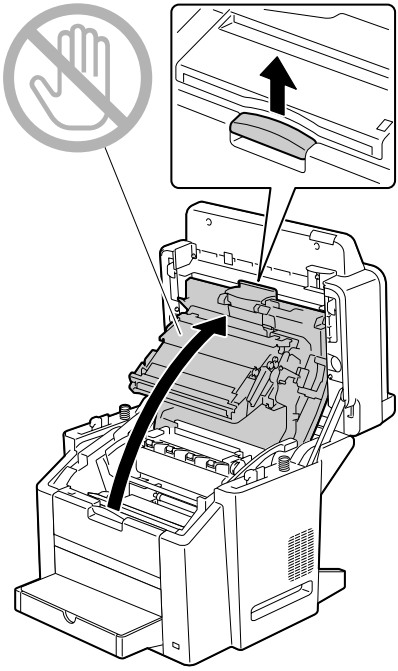

If there is media in the output bin, remove it.

Before opening the engine cover, be sure to fold up the output bin.

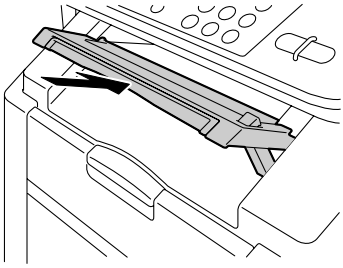

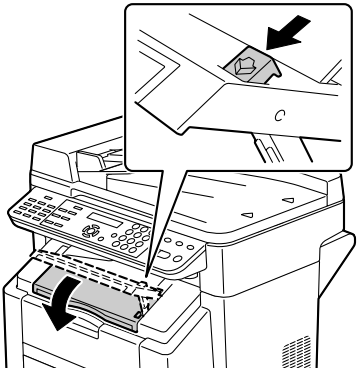

9

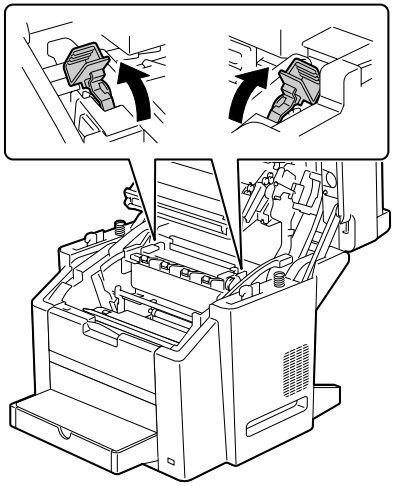

10

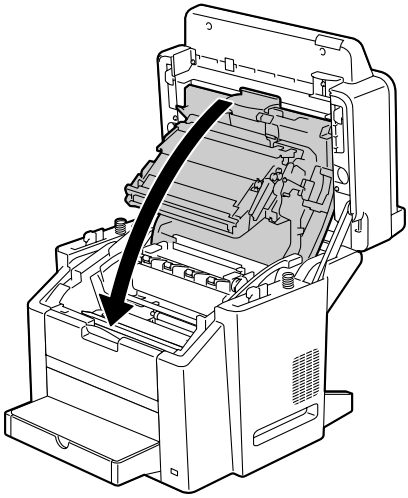

11

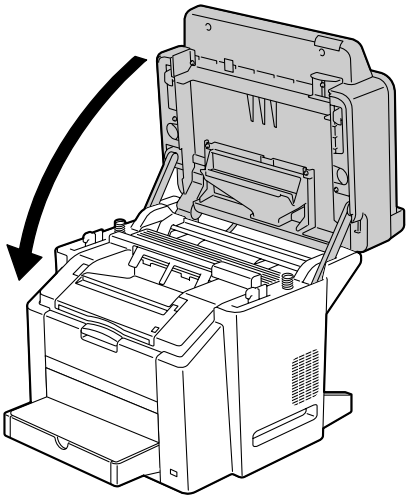

Before printing on media other than envelopes, be sure to move the fuser separator levers on the fuser unit to their original positions.

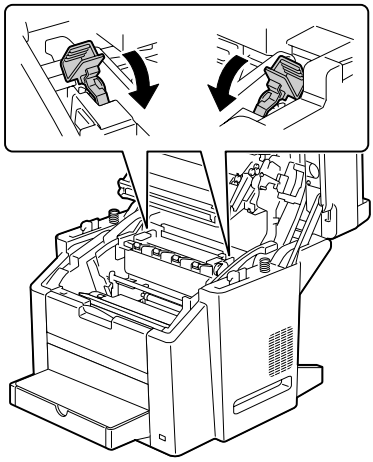

Loading Labels/Postcard/Thick Stock/Transparency/ Glossy media

1

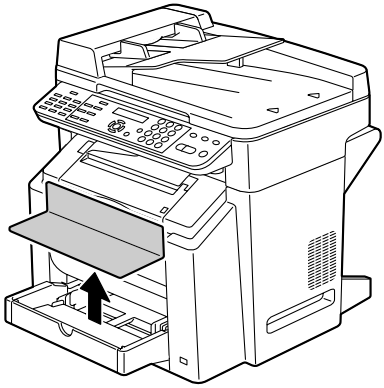

2

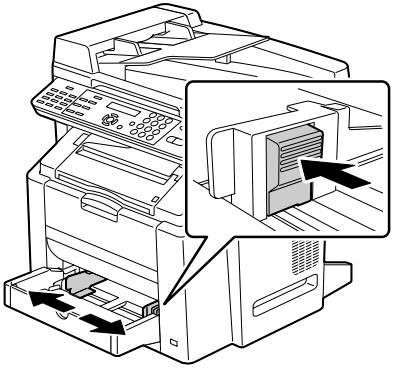

3

Up to 50 sheets can be loaded into the tray at one time.

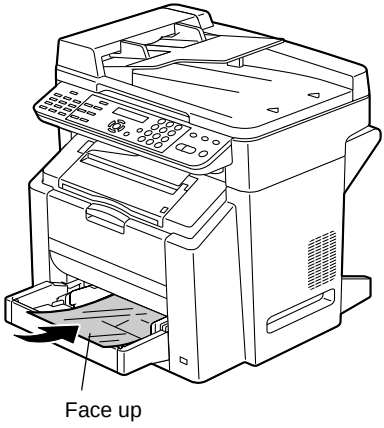

4

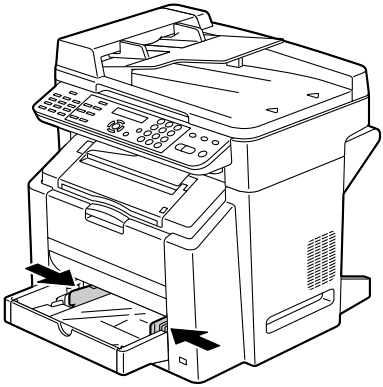

5

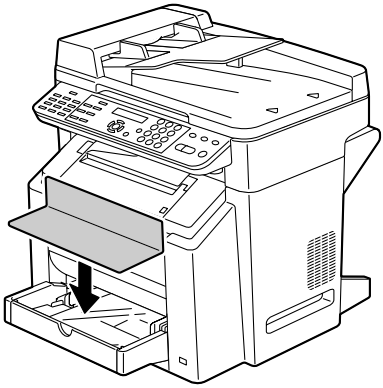

Tray 2

Only plain paper can be loaded in Tray 2.

Loading Plain Paper

1

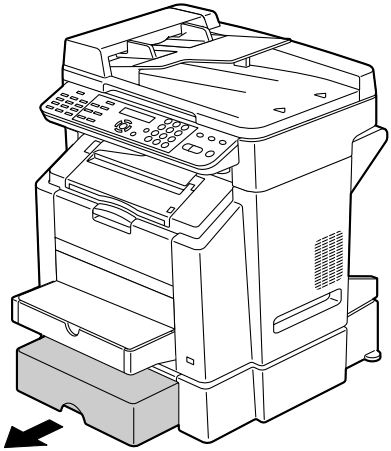

2

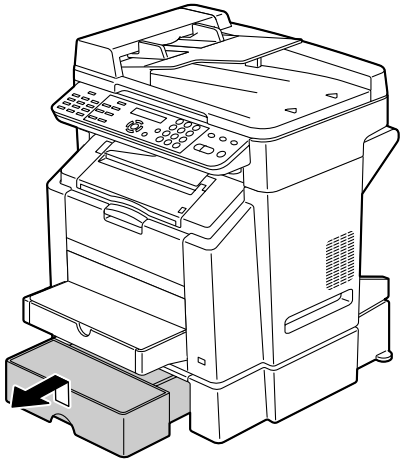

3

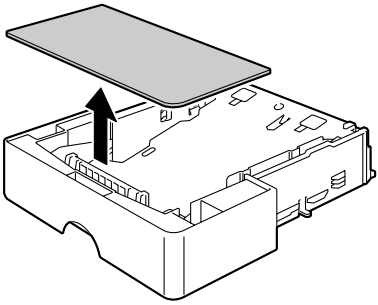

4

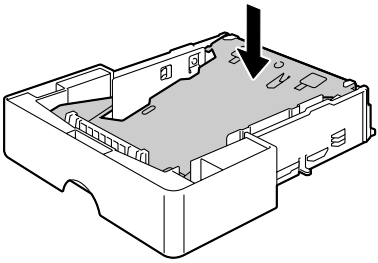

5

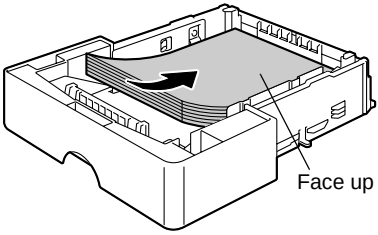

Do not load above the 100% line. Up to 500 sheets (80 g/m^2 [22 lb]) of plain paper can be loaded into the tray at one time.

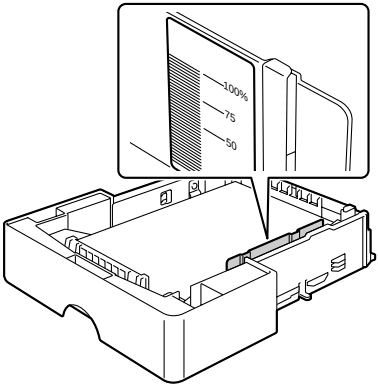

6

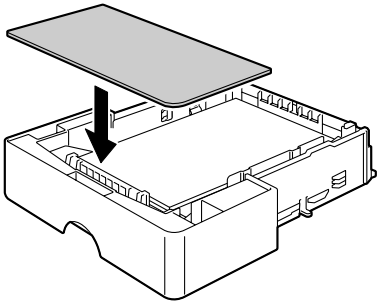

7

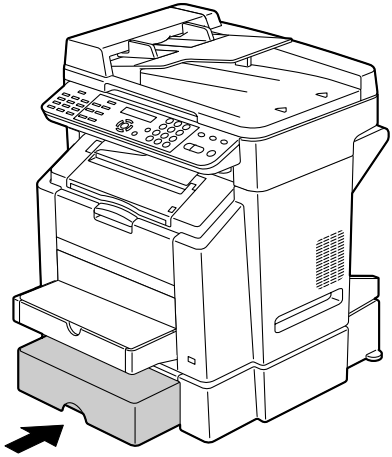

About Duplex Printing

You should verify that the duplex option is physically installed on the machine to successfully duplex the job.

Check your application to determine how to set your margins for duplex printing.

Note

Only plain paper, 60–90 g/m^2 (16–24 lb bond), can be autoduplexed. See “Specifications” on page 38.

Duplexing envelopes, labels, transparencies postcards, or glossy media is not supported.

The following Double-Sided/Booklet settings are available.

With duplexing, the back side is printed first, and then the front side is printed.

Double-Sided

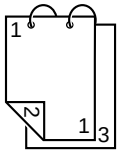	If “Short Edge Binding” is selected, the pages will be laid out to flip at the top.
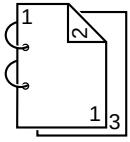	If “Long Edge Binding” is selected, the pages will be laid out to flip at the sides.

Booklet

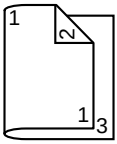	If “Left Binding” is selected, the pages can be folded as a left-bound booklet.
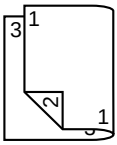	If “Right Binding” is selected, the pages can be folded as a right-bound booklet.

Output Bin

All printed media is output to the face-down output bin. This tray has a capacity of approximately 100 sheets (A4/Letter) of 80 g/m^2 (22 lb) media.

If the media is stacked too high in the output bin, your machine may experience media misfeeds, excessive media curl, or static buildup.

Remove transparencies as soon as possible from the output bin to avoid static buildup.

The output bin can be adjusted to two angles, as shown in the illustration at the right.

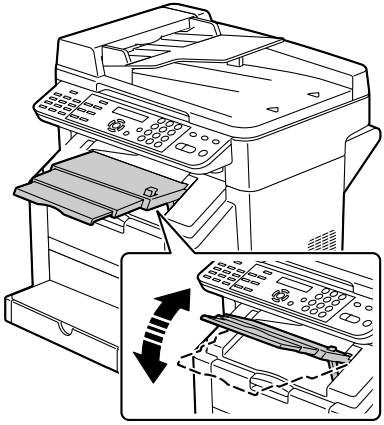

Press and hold in the button on the right side of the output bin to lower the bin to the horizontal position.

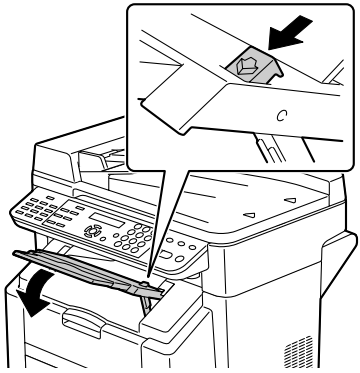

When printing on postcards, make sure that the output bin is horizontal.
If the output bin is slanted while printing, the postcards may be curled and an error message may appear before the output bin contains 10 sheets.

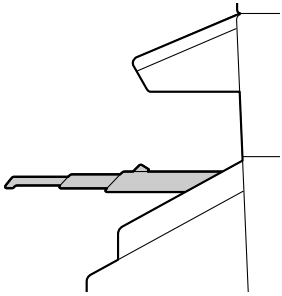

In addition, the output bin extension can be pulled out to two different positions.
Use the appropriate position depending on the size of the media being printed on.

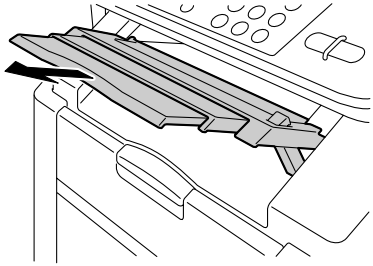

Media Storage

- Keep media on a flat, level surface in its original wrapper until it is time to load it.

  Media that has been stored for a long time out of its packaging may dry up too much and cause misfeeding.
- If media has been removed from its wrapper, place it in its original packaging and store in a cool, dark place on a level surface.
- Avoid moisture, excessive humidity, direct sunlight, excessive heat (above 35°C [95°F]), and dust
- Avoid leaning against other objects or placing it in an upright position.

Before using stored media, do a trial print and check print quality.

Original Media

Specifications

Documents that can be Placed on the Original Glass

The following types of documents can be placed on the original glass.

Document type	Sheets or books
Maximum document size	Legal
Maximum weight	3 kg (6.6 lb)

Observe the following precautions when placing a document on the original glass.

- Do not place objects weighing more than 3 kg (6.6 lb) on the original glass; otherwise the glass may be damaged.
- Do not press down extremely hard on a book spread on the original glass; otherwise the original glass may be damaged.

Documents that can be Loaded into the ADF

The following types of documents can be loaded into the ADF.

Document media type / Weight	Plain paper / 60 to 128 g/m² (16 to 34 lb)
Maximum document size	Legal
Media capacity	50 sheets

Do not load the following types of documents into the ADF.

- Documents containing pages of different sizes
- Wrinkled, folded, curled, or torn documents
- Highly translucent or transparent documents, such as overhead transparencies or diazo photosensitive paper
- Coated documents such as carbon-backed paper
- Documents printed on paper thicker than 128 g/m² (34 lb)
- Documents with pages bound together with paper clips or staples
- Documents that are bound in a book or booklet
- Documents with pages bound together with glue

- Documents with pages that have had cutouts removed or are cutouts
- Label sheets
- Offset printing masters
- Documents with binder holes

Loading a Document to be Copied

Placing a Document on the Original Glass

1

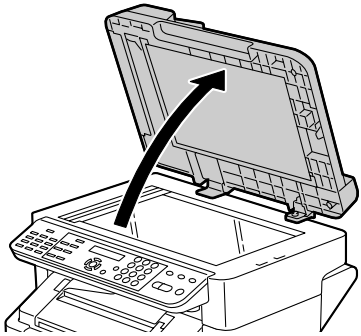

2

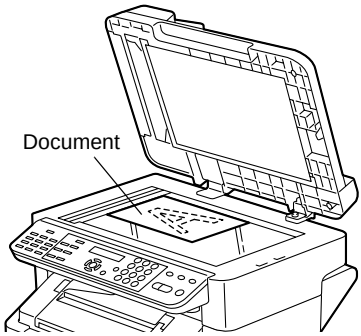

Align the document with the arrow on the left side toward the rear of the machine.

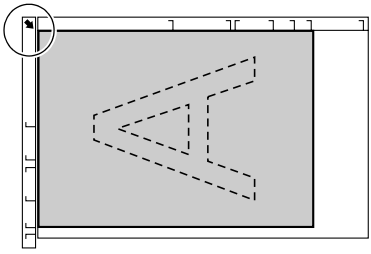

3

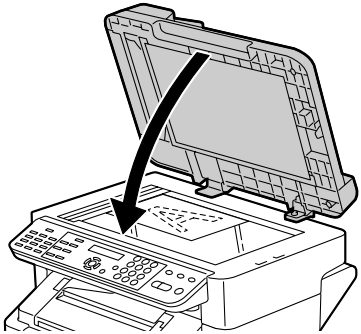

Loading a Document into the ADF

1

Before loading a document into the ADF, check that no document pages remain on the original glass.

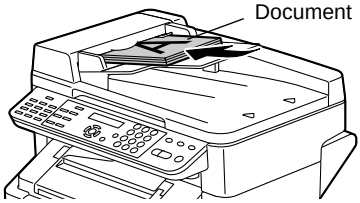

2

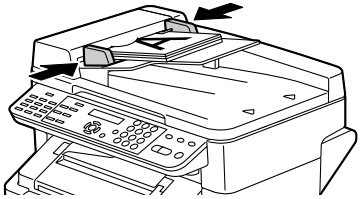

Using the Printer Driver

4

Selecting Printer Driver Options/Defaults

Before you start working with your machine, you are advised to verify and, if necessary, change the default printer driver settings. Also, in case you have options installed, you should “declare” the options in the printer driver.

1 Choose the driver’s properties as follows:

– (Windows XP/Server 2003)
From the **start** menu, choose **Printers and Faxes** to display the **Printers and Faxes** directory. Right-click the KONICA MINOLTA magicolor 2490MF printer icon and choose **Printing Preferences**.

– (Windows 2000)
From the **Start** menu, choose **Settings** and then **Printers** to display the **Printers** directory. Right-click the KONICA MINOLTA magicolor 2490MF printer icon and choose **Printing Preferences**.

– (Windows Me/98SE)
From the **Start** menu, choose **Settings** and then **Printers** to display the **Printers** directory. Right-click the KONICA MINOLTA magicolor 2490MF printer icon and choose **Properties**. Choose **Printer Properties**.

2 If you have installed available options, proceed with the next step. Otherwise, proceed with step 8.

3 Select the **Device Options Setting** tab.

4 Check that the options have been correctly identified.

*Since **Auto configure** is selected as a default with this driver, installed options are automatically identified. If, for some reason, the options are not correctly identified, follow the operations described in steps 5 through 7.*

5 Clear the **Auto configure** check box.

6 Select an option (one at a time), and then select **installed** from **Settings**. **installed** appears to the right of the option in the **Device Options** list.

*To uninstall an option, select the option to be uninstalled in the **Device Options** list, and then select **Not installed** from **Settings**.*

7 Click **Apply**.

*Depending on the version of the operating system, **Apply** may not appear. If this is the case, continue with the next step.*

8 Select the **Basic** tab. Select the default settings for your machine, such as the default media format you use.

9 Click **Apply**.

10 Click **OK** to exit from the Properties dialog box.

Uninstalling the Printer Driver

This section describes how to uninstall the magicolor 2490MF printer driver if necessary.

1 From the **Start** (Windows XP/Server 2003: **start**) menu, choose **Programs** (Windows XP/Server 2003: **All Programs**), **KONICA MINOLTA**, **magicolor 2490MF**, and then **Uninstall**.

2 In the Uninstall window, select the KONICA MINOLTA magicolor 2490MF. Then click **Uninstall**.

3 The magicolor 2490MF printer driver will be uninstalled from your computer.

When using Windows 98SE, restart the computer after uninstalling the printer driver.

Displaying Printer Driver Settings

Windows XP/Server 2003

1 From the **start** menu, choose **Printers and Faxes** to display the **Printers and Faxes** directory.

2 Right-click the KONICA MINOLTA magicolor 2490MF printer icon and choose **Printing Preferences**.

Windows 2000/Me/98SE

1 From the **Start** menu, point to **Settings**, and then click **Printers** to display the **Printers** directory.

2 Display the printer driver settings:

- **Windows 2000**—Right-click the KONICA MINOLTA magicolor 2490MF printer icon and choose **Printing Preferences**.
- **Windows Me/98SE**—Right-click the magicolor 2490MF printer icon and choose **Properties**, then select **Printer Properties**.

Printer Driver Settings

Common Buttons

The buttons described below appear on each tab.

OK

Click to exit the Properties dialog box, saving any changes made.

Cancel

Click to exit the Properties dialog box without saving any changes made.

Apply

Click to save all changes without exiting the Properties dialog box.

*Depending on the version of the operating system, **Apply** may not appear.*

Help

Click to view the help.

Easy Set

Click **Save** to save the current settings. Specify a **Name** and **Comment** to access the settings for use again later.

- **Name:** Type in the name of the settings to be saved.
- **Comment:** Add a simple comment to the settings to be saved.

Afterward, the saved settings can be selected from the drop-down list. To change the registered settings, click **Edit**.

Select **Default** from the drop-down list to reset the functions in all tabs to their default values.

Paper View

Click the button to display a sample of the page layout in the figure area.

*This button does not appear on the **Version** tabs.*

Printer View

Click the button to display an image of the printer in the figure area.

*This button does not appear on the **Version** tab.*

Watermark View

Click this button to display a preview of the watermark.

*This button appears only when the **Watermark** tab is selected.*

Quality View

Click this button to display a sample of the settings selected in the **Quality** tab.

*This button appears only when the **Quality** tab is selected.*

Default

Click this button to reset the settings to their defaults.

*This button does not appear on the **Version** tab.*

When this button is clicked, the settings in the displayed dialog box are reset to their defaults. The settings on other tabs are not changed.

Basic Tab

The Basic Tab allows you to

- Specify the orientation of the media
- Specify the size of the original document
- Select the output media size
- Zoom (expand/reduce) documents
- Specify the paper source
- Specify the type of media
- Specify the number of copies
- Turn on/off job collation

Layout Tab

The Layout Tab allows you to

- Print several pages of a document on the same page (N-up printing)
- Rotate the print image 180 degrees
- Specify Double-Sided printing
- Specify booklet printing
- Specify image shift settings

Overlay Tab

Be sure to use overlays with print jobs with a media size and orientation that matches the overlay form.
In addition, if settings have been specified for "N-up" or "Booklet" in the printer driver, the overlay form cannot be adjusted to match the specified settings.

The Overlay Tab allows you to

- Select the form Overlay to use
- Add, edit or delete overlay files
- Print the form on all pages or only the first page

Watermark Tab

The Watermark Tab allows you to

- Select the watermark to be used
- Add, edit or delete watermarks
- Print the watermark on the background
- Print the watermark on only the first page
- Print multiple copies of the selected watermark on a single page

Quality Tab

The Quality Tab allows you to

- Specify whether to print in color or black and white
- Adjust the contrast (Contrast)
- Control the darkness of an image (Brightness)
- Adjust the saturation of printed image (Saturation)
- Specify the color matching for printing documents

- Specify the resolution for the printout

Device Options Setting Tab

The Device Options Setting tab allows you to

- Automatically identify installed options
- Activate Tray 2 and/or the duplex option
- Enter the user name that is sent with the print job(s)

Version Tab

- The Version Tab allows you to view information about the printer driver.

Using Direct Print

5

Camera Direct Photo Printing

If a digital camera with PictBridge (1.0 or later) is connected to the machine via the USB Host Port, images stored on the digital camera can be printed directly on the machine.

The following features are not supported with Camera Direct Photo Printing.
• DPOF AUTOPRINT image print
• Borderless
• Cable disconnect enable
• DPOF cable disconnect recovery
Index print and printing using an `N-UP LAYOUT` *setting is possible only with Letter- and A4-size media.*

Make sure that the paper loaded into the paper tray is the same size as that selected for `PAPER SIZE` *in the* `DIRECT PRINT` *menu.*

The types of media that can be used with Camera Direct Photo Printing are plain paper, thick stock, labels, glossy media, and postcard.

Printing Directly from a Digital Camera

1 From the `DIRECT PRINT` menu, specify settings for `IMAGE QUALITY`, `PAPER SIZE`, and `N-UP LAYOUT`.

If these settings can be specified from the digital camera, they do not need to be specified from the control panel. These settings are overridden by settings configured within the digital camera.
For details on control panel settings, refer to “DIRECT PRINT Menu” on page 32.

Printing is not possible if the media size (image size) specified from the camera is larger than the media size selected for `PAPER SIZE` *in the* `DIRECT PRINT` *menu.*

2 Connect the USB cable to the digital camera and to the Digital Camera Direct Photo print port.

A USB cable is not included with the machine and must be purchased separately, if not supplied with your digital camera.

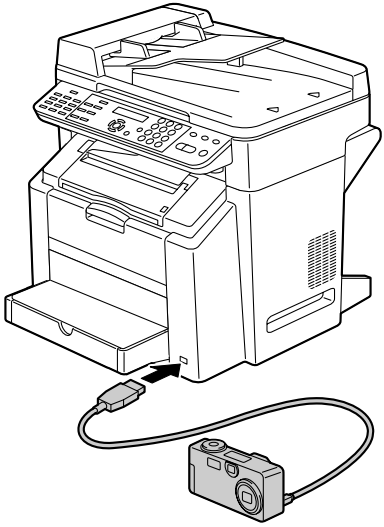

3 From the digital camera, specify the image(s) that you wish to print and the desired number of copies.

4 Start printing from the digital camera.

Using the Copier

6

Making Basic Copies

This section contains descriptions of the basic copy operation procedure and the functions that are frequently used when making copies, such as specifying the zoom ratio and the copy density.

*If the **Fax** key or **Scan** key lights up in green while copying, press the **Copy** key.*

Change the media size from the PAPER SOURCE menu.

For details, refer to “PAPER SOURCE SETUP Menu” on page 27.

Basic Copy Operation

1 Position the document to be copied.

For details on positioning the document, refer to “Placing a Document on the Original Glass” on page 69 and “Loading a Document into the ADF” on page 70.

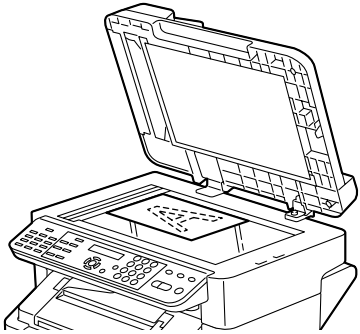

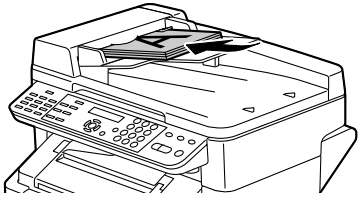

2 Specify the desired copy settings.

For details on specifying the copy quality, refer to “Specifying the Copy Quality” on page 85.
For details on specifying the zoom ratio, refer to “Specifying the Zoom Ratio” on page 85.
For details on selecting the copy density, refer to “Selecting the Copy Density” on page 87.
For details on selecting the media tray, refer to “Selecting the Media Tray” on page 87.
For details on setting 2in1 copying, refer to “Setting 2in1 Copying” on page 88.
For details on ID card copying, refer to “ID Card Copying” on page 89.
For details on setting duplex (Double-Sided) copying, refer to “Setting Duplex (Double-Sided) Copying” on page 91.
For details on setting collated copying, refer to “Setting Collated Copying” on page 93.

3 Using the keypad, specify the desired number of copies.

*If the number of copies was incorrectly entered, press the **Cancel/C** key, and then specify the correct number of copies.*

4 To print color copies, press the **Start-Color** key. To print monochrome copies, press the **Start-B&W** key.

Copying begins.

*If the **Stop/Reset** key is pressed while copying, PRESS THE START KEY TO RESUME appears. To continue copying, press the **Start-B&W** key or the **Start-Color** key. To stop copying, press the **Stop/Reset** key.*

Specifying the Copy Quality

The copy quality can be set according to the contents of the document.

1 Press the **Quality** key.

2 Press the ◀ or ▶ key to select MIX, TEXT or PHOTO, and then press the **Menu/Select** key.

The main screen appears again.

Specifying the Zoom Ratio

The zoom ratio can be specified either by selecting a preset zoom ratio or by specifying a custom zoom ratio.

Selecting a Preset Zoom Ratio

1 Press the **Reduce/Enlarge** key until the desired zoom ratio is selected.

The zoom ratio changes in the following order with each press of the ***Reduce/Enlarge*** *key.*
When `USER SETTING/PRESET ZOOM` *is set to* `METRIC:`
`1.15→1.41→2.00→0.50→0.70→0.81`
When `USER SETTING/PRESET ZOOM` *is set to* `INCH:`
`1.29→1.54→2.00→0.50→0.64→0.78`

The zoom ratio cannot be changed using the keypad.

Depending on the selected preset zoom ratio, a sample of the change to the media size may appear in the status area in the lower-right corner of the message window. The sample of the media size change will disappear after 5 seconds.

Specifying a Custom Zoom Ratio

1 Press the ▲ or ▼ key until the desired zoom ratio is displayed.

Each press of the ▲ or ▼ key changes the zoom ratio by 0.01.
A setting between `0.50` *and* `2.00` *can be specified.*

The zoom ratio cannot be changed using the keypad.

Selecting the Copy Density

*If [A] is displayed, press the **Light/Dark** key twice to specify the copy density.*

1 Press the ◀ or ▶ key to select the desired copy density.

As the indicator is moved to the right, the density becomes darker. As the indicator is moved to the left, the density becomes lighter.

*The copy density can also be selected by pressing the **Light/Dark** key. Press the **Light/Dark** key to display the DENSITY screen. Press the ◀ or ▶ key to select the copy density, and then press the **Menu/Select** key.*

Selecting the Media Tray

If optional Tray 2 is not installed, the tray cannot be selected.

1 Press the **Function** key.

2 Press the ▲ or ▼ key to select 1 TRAY SELECT, and then press the **Menu/Select** key.

If Tray 2 is not installed, 1 TRAY SELECT does not appear.

3 Press the ◀ or ▶ key to select the TRAY1 or TRAY2, and then press the **Menu/Select** key.

Making Advanced Copies

This section contains descriptions of setting 2in1 copying, ID card copying, duplex (Double-Sided) copying, and collated copying.

2in1 copying, duplex (Double-Sided) copying, ID card copying and collated copying cannot be combined.

Setting 2in1 Copying

If 2in1 copying is set, two document pages can be copied together onto a single page.

With 2in1 copying, load the document into the ADF. 2in1 copying cannot be performed by using the original glass.

1 Press the **2in1** key.

The zoom ratio is set to `0.64` on USA and Canada and `0.70` on other countries, and II appears in the message window.

2in1 copying cannot be specified if the ADF is open.

ID Card Copying

With ID card copying, the back and front of a document, such as a certificate, are copied at full size on a single sheet of paper.

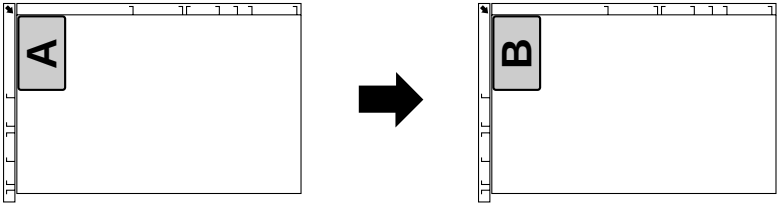

front side back side

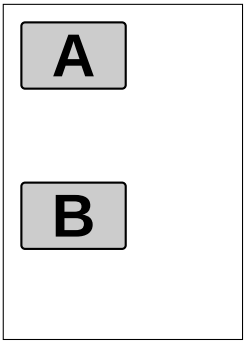

When ID card copying is set, the zoom ratio cannot be changed.

ID card copying can only be performed from the original glass. Align the document with the arrow on the left side toward the rear of the machine.
Since the areas 4 mm at the top and 4 mm at the left are not within the print area, those parts of the document are not copied. Therefore, the position of the document to be copied may need to be adjusted.

The paper sizes that are available for ID card copying are A4, Letter and Legal.

1 Position the document on the original glass.

For details on positioning the document on the original glass, refer to “Placing a Document on the Original Glass” on page 69.

2 Press the **Function** key.

3 Press the ▲ or ▼ key to select the `3, ID CARD COPY`, and then press the **Menu/Select** key.

4 Press the ◀ or ▶ key to select ON, and then press the **Menu/Select** key.

5 To print color copies, press the **Start-Color** key. To print monochrome copies, press the **Start-B&W** key.

Scanning of the document begins.

6 When NEXT PAGE appears, position the back side of the document at the same location as the front side, and then press the **Start-Color** or **Start-B&W** key.

After the back side has been scanned, printing automatically begins.

The main screen appears again.

Setting Duplex (Double-Sided) Copying

Duplex (Double-Sided) Copying From the ADF

If duplex (Double-Sided) copying is set, copies can be printed on both sides of the media.

The duplex option must be installed in order to set duplex (Double-Sided) copying.

1 Press the **Function** key.

2 Press the ▲ or ▼ key to select 2 DUPLEX, and then press the **Menu/Select** key.

If the duplex option is not installed, 2 DUPLEX does not appear.

This screen appears only if the duplex option is installed.

3 Press the ◀ or ▶ key to select LONG EDGE or SHORT EDGE, and then press the **Menu/Select** key.

The main screen appears again, and appears in the message window.

When making Double-Sided copies in full color, printing will begin 30 to 50 seconds after scanning of the document is finished.

When LONG EDGE or SHORT EDGE is selected, duplex (Double-Sided) copying is performed as described below.

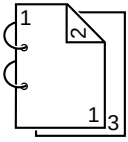	If *LONG EDGE* is selected, the pages will be laid out to flip at the sides.
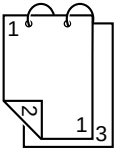	If *SHORT EDGE* is selected, the pages will be laid out to flip at the top.

Duplex (Double-Sided) Copying From the Original Glass

Duplex (Double-Sided) copying can be performed either from the original glass or from the ADF. The description for duplex (Double-Sided) copying with the original glass is provided below.

1 Position the document on the original glass.

For details on positioning the document on the original glass, refer to “Placing a Document on the Original Glass” on page 69.

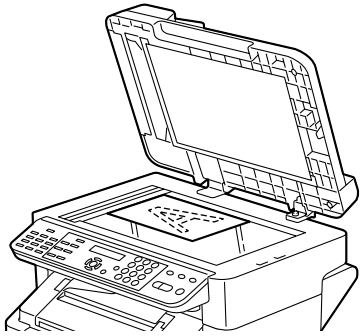

2 Press the **Function** key and set duplex (Double-Sided) copying.

For details on setting duplex (Double-Sided) copying, refer to “Setting Duplex (Double-Sided) Copying” on page 91.

3 To print color copies, press the **Start-Color** key. To print monochrome copies, press the **Start-B&W** key.

Scanning of the document begins.

4 When NEXT PAGE appears in the message window, place the second document page on the original glass, and then press the **Start-Color** key or the **Start-B&W** key.

After the second page (back side) is scanned, printing begins automatically.

The main screen appears again.

Setting Collated Copying

If collated copying is set, multiple sets of copies can be printed from a multi-page document.

With collated copying, load the document into the ADF. Collated copying cannot be performed by using the original glass.

1 Press the **Collate** key.

appears in the message window.

*If `COPY SETTING/4 COLLATE` is set to `ON`, do not press the **Collate** key.*

Collated copying cannot be specified if the ADF is open.

Using the Scanner

7

Making Basic Scans

Scanning via USB

Scanning can be performed from a TWAIN-compatible application.

*To scan via the network, press the **Scan** key. For details, refer to “Basic Scan to Email Operation” on page 99*

1 Position the document to be scanned.

For details on positioning the document, refer to “Placing a Document on the Original Glass” on page 69 and “Loading a Document into the ADF” on page 70.

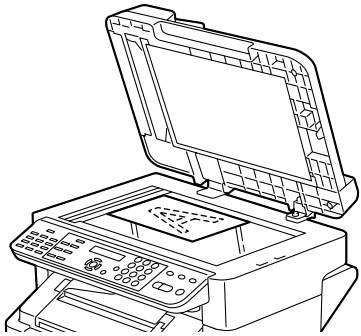

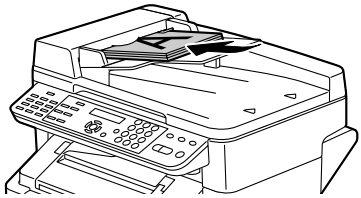

2 Start the application to be used for scanning.

3 Start the scanner driver according to the application settings.

4 Specify the necessary scanner driver settings.

5 Click the **Scan** button in the scanner driver.

Scanner Driver Settings

Original Size

Specify the original size.

Scan Type

Specify the scan type.

Resolution

Specify the resolution.

Scanning mode

Select **Auto** or **Manual**. When **Manual** is selected, settings can be specified for **Rotation type**, **Brightness/Contrast**, **Sharp**, **Curves**, **Level**, **Color Balance** and **Hue/Saturation**.

Image size

Shows the data size of the scan image.

Scan

Click to begin scanning.

About

Shows the software version information.

Close

Click to close the scanner driver window.

Preview Window

Displays a preview of the scan.

Clear

Erases the preview.

Width/Height

Shows the width and height of the area to be scanned.

Prescan

Displays a preview in the preview window.

Help

Displays the Help.

Basic Scan to Email Operation

With a scan to email operation, documents are sent via a mail server.

In order to perform this operation, the network setting and the email setting must have already been specified. For details, refer to “NETWORK SETTING Menu” on page 33 and “E-MAIL SETTING Menu” on page 34.

Scan to Email Using the ADF

If the ADF is used, original documents containing multiple pages can be automatically scanned.

Do not load original documents that are bound together, for example, with paper clips or staples.

Do not load more than 50 sheets; otherwise an original document misfeed or damage to the document or machine may occur.

If the original document is not loaded correctly, it may not be fed in straight, or an original document misfeed or damage to the document may occur.

Do not open the ADF cover while documents loaded into the ADF are being scanned.

1. Press the **Scan** key to enter Scan mode.
2. Make sure that there is no document on the original glass.
3. Stack the document in the ADF document feed tray face up with the first page to be sent on the top of the stack.
4. Adjust the document guides to the document size.
5. Specify the email address of the recipient in one of the following ways, and then press the **Menu Select** key.
   - Direct input
   - Using the one-touch dial key (including group dialing)
   - Using the speed dial number
   - Using the phone book function

For details on specifying the recipient, refer to “Specifying a Recipient” on page 104.

By specifying one TO address and 124 CC addresses, a total of 125 recipients can be specified.

*Email addresses specified after the **Scan** key is pressed are set as scan to email recipients.*

6 Enter a title (subject), and then press the **Menu Select** key.

If you do not want to specify the subject line, resolution and other settings, skip to step 12.

7 Enter the email address for any additional recipient as a CC address, and then press the **Menu Select** key.

*To specify more then one CC address, press the **Menu Select** key to enter the additional addresses. Repeat step 7 until all of the recipients have been specified.*

8 After you have finished specifying the addresses for additional recipients, press the **Menu Select** key.

9 Using the ◀ and ▶ keys, select the color mode (“GRAY” or “B/W”), and then press the **Menu Select** key.

“COLOR” cannot be selected for the scan mode when the ADF is used. In that case, select “GRAY” or “B/W” (black and white).

10 Using the ◀ and ▶ keys, select the resolution (150 × 150 dpi, 300 × 300 dpi or 600 × 600 dpi), and then press the **Menu Select** key.

The 600 × 600 dpi resolution cannot be selected if “GRAY” was selected as the scan mode in step 9.

To specify detailed settings for the scan mode, such as the data format and compression encoding method, press the ▼key.

For information on specifying detailed settings, refer to “Changing the Scan Mode Settings” on page 107.

11 Using the ◀ and ▶ keys, select “ADF”.

To change the size of the scanned image, press the ▼key.

For information on changing the size, refer to “Changing the Scanned Image Size” on page 108.

12 Press the **Start** key.
Scanning starts, and then the scan data is sent to the recipients.

*To stop scanning and stop the transmission, press the **Stop/Reset** key. A message appears, requesting confirmation to cancel the setting. Select "Yes", and then press the **Menu Select** key.*

If you want to cancel a scanned document queued for transmission, select "CANCEL RESERV." from the Function menu. For details, refer to the magicolor 2490MF Facsimile User's Guide.

Scan data is not sent directly to the recipient. In addition, images are regarded as having been sent successfully on completion of their transmission to the server.

If the email could not be sent, a transmission result report can be printed. For details, refer to the magicolor 2490MF Facsimile User's Guide.

Scan to Email Using the Original Glass

1 Press the **Scan** key to enter Scan mode.

2 Remove all documents from the ADF.

If you are using the original glass to scan, do not load any documents into the ADF.

3 Lift open the ADF cover.

4 Place the original document face down on the original glass and align the document on the scales above and to the left of the original glass.

5 Gently close the ADF cover.

Closing it too quickly may cause the document to move on the original glass.

6 Specify the email address of the recipient in one of the following ways, and then press the **Menu Select** key.

– Direct input

– Using the one-touch dial key

– Using the speed dial number

– Using the phone book function

For details on specifying the recipient, refer to "Specifying a Recipient" on page 104.

By specifying one TO address and 124 CC addresses, a total of 125 recipients can be specified.

*Email addresses specified after the **Scan** key is pressed are set as scan to email recipients.*

7 Enter a title (subject), and then press the **Menu Select** key.

8 Enter the email address for any additional recipient as a CC address, and then press the **Menu Select** key.

*To specify more then one CC address, press the **Menu Select** key to enter the additional addresses. Repeat step 8 until all of the recipients have been specified.*

9 After you have finished specifying the addresses for additional recipients, press the **Menu Select** key.

10 Using the ◀ and ▶ keys, select the color mode (“COLOR”, “GRAY”, or “B/W”), and then press the **Menu Select** key.

11 Using the ◀ and ▶ keys, select the resolution (150 × 150 dpi, 300 × 300 dpi or 600 × 600 dpi), and then press the **Menu Select** key.

The 600 × 600 dpi resolution cannot be selected if “COLOR” or “GRAY” was selected as the scan mode in step 10.

To specify detailed settings for the scan mode, such as the data format and compression encoding method, press the ▼key.

For information on specifying detailed settings, refer to “Changing the Scan Mode Settings” on page 107.

12 Press the **Menu Select** key.
Scanning starts.

*To change the size of the scanned image, press the ▼key before pressing **Start** key.*

For information on changing the size, refer to “Changing the Scanned Image Size” on page 108.

13 When scanning a document containing several pages, place the next page on the original glass when the message “NEXT PAGE?” appears, and then press the **Menu Select** key.

– Repeat step 14 until all of the pages in the document have been scanned.

14 Press the **Start** key.
Transmission starts.

*To stop scanning and stop the transmission, press the **Stop/Reset** key. A message appears, requesting confirmation to cancel the setting. Select “Yes”, and then press the **Menu Select** key.*

If you want to cancel a scanned document queued for transmission, select “CANCEL RESERV.” from the Function menu. For details, refer to the magicolor 2490MF Facsimile User's Guide.

Scan data is not sent directly to the recipient. In addition, images are regarded as having been sent successfully on completion of their transmission to the server.

If the email could not be sent, a transmission result report can be printed. For details, refer to the magicolor 2490MF Facsimile User's Guide.

Specifying a Recipient

The recipients can be specified in any of the following ways.

- Direct input: Directly enter the email address.
- Using a one-touch dial key: Specify a recipient registered with a one-touch dial key.
- Using speed dial numbers: Specify a recipient registered with a speed dial number.
- Using the phone book functions: List or search for recipients registered as one-touch dial keys or speed dial numbers, and then select a recipient.

Directly Entering an Email Address

1 Use the numeric keypad to type in the email address for the recipient.

For details on entering/editing text and the characters that can be entered, refer to the magicolor 2490MF Facsimile User's Guide.

*To erase the entered email address, hold down the **Cancel/C** key for about one second, or press the **Stop/Reset** key.*

Using a One-Touch Dial Key

If a recipient has been registered with a one-touch dial key, the recipient's email address can be entered simply by pressing the programmed one-touch dial key.

The recipient must have been registered with a one-touch dial key in advance. For details, refer to the magicolor 2490MF Facsimile User's Guide.

1 Press the desired one-touch dial key.

Press the one-touch dial key programmed with the group dial recipients to send an email to multiple recipients.
If a one-touch key programmed with group dial recipients is selected in the screen for specifying the TO address, all email addresses included in the group dial are added to the TO address. If it is selected in the screen for specifying the CC address, all addresses are added to the CC address.

*If an incorrect recipient was selected, press the **Cancel/C** key.*

If the one-touch dial key that is pressed is not registered with an email address, the message “NOT E-MAIL ADDRESS” appears. In addition, if the one-touch dial key that is pressed is not registered with a recipient, the message “NOT REGISTERED!” appears. Press a one-touch dial key registered with an email address.

Using the Speed Dial Function

If a recipient has been registered with a speed dial number, the recipient’s fax number can be dialed simply by pressing a speed dial number key.

The recipient must have been registered with a speed dial in advance. For details, refer to the magicolor 2490MF Facsimile User's Guide.

1 Press the Speed Dial key.

2 Use the keypad to enter the 3-digit speed dial number programmed with the desired recipient.

The recipients name appears in the message window.

*If an incorrect recipients was selected, press the **Cancel/C** key.*

If the entered speed dial number is not registered with an email address, the message “NOT E-MAIL ADDRESS” appears. In addition, if the entered speed dial number is not registered with a recipient, the message “NOT REGISTERED!” appears. Enter a speed dial number registered with an email address.

Using the List Function of the Phone Book

If a recipient is registered with a one-touch dial key or a speed dial number, the recipient can be found by using the List or Search function of the phone book.

Follow the procedure described below to search using the List function of the phone book.

1 Press the **Speed Dial** key twice.

2 Using the ◀ and ▶ keys, select “LIST”, and then press the **Menu Select** key.
The list of one-touch dial keys and speed dial numbers registered with an email address is displayed.

3 Using the ▲ and ▼ keys, select the desired recipient.

4 Press the **Menu Select** key.

Using the Search Function of the Phone Book

If a recipient is registered with a one-touch dial key and a speed dial number, the recipient can be found by using the List or Search function of the phone book.

Follow the procedure described below to search using the Search function of the phone book.

1 Press the **Speed Dial** key twice.

2 Using the ◀ and ▶ keys, select “SEARCH”, and then press the **Menu Select** key.
A screen appears, allowing you to enter the text to be searched for.

3 Using the keypad, enter the first few characters of the name programmed for the desired recipient.

Enter the name programmed in the one-touch dial key or the speed dial number. For details on entering text, refer to the magicolor 2490MF Facsimile User's Guide.

Text up to 10 characters long can be entered.

4 Press the **Menu Select** key.
The number of names beginning with the text entered in step 3 is displayed.

If there are no names programmed with one-touch dial keys or speed dial numbers beginning with the entered text, “(0)” is displayed, and then the screen allowing you to enter the search text appears.

5 To select a recipient from the displayed search results, skip to step 7.
OR
To narrow down the search results even further, press the **Menu Select** key, and then enter more search text.

6 Press the **Menu Select** key.

7 Using the ▲ and ▼ keys, select the desired recipient.

*If the desired recipient name does not appear in the search results, press the **Clear/C** key twice to return to the screen allowing you to enter the search text, and then try searching for different text.*

8 Press the **Menu Select** key.

Changing the Scan Mode Settings

The scan mode settings, such as the data format and compression encoding method, can be changed from the screen for selecting the resolution. If the settings are not changed, scan data will be sent using the default scan mode settings.

For more details, refer to the magicolor 2490MF Facsimile User's Guide.

1 Using the ◀ and ▶ keys, select the color mode, and then press the **Menu Select** key.

2 Using the ◀ and ▶ keys, select the resolution (150 × 150 dpi, 300 × 300 dpi or 600 × 600 dpi), and then press the ▼ key.

The screen for selecting the data format appears.

3 Using the ◀ and ▶ keys, select the data format (“TIFF” or “PDF”) for email attachments, and then press the ▼ key.

PDF data can be opened in Adobe Acrobat Reader.

TIF files of images that have been scanned with the Color or Gray setting cannot be opened with the Windows Picture and FAX Viewer, which is included with Windows XP as a standard component. These files can be opened with image-processing applications such as PhotoShop, Microsoft Office Document Imaging or ACDsee.

*To cancel the settings, press the **Cancel/C** key. The screen for selecting the color mode appears again.*

*To quit making changes to the scan mode settings, press the **Start** key.*

If “GRAY” or “COLOR” was selected for the color mode in step 1, the screens in steps 4 and 5 do not appear.

4 Using the ◀ and ▶ keys, adjust the density for the document to be scanned, and then press the ▼ key.

5 Using the ◀ and ▶ keys, select the compression encoding method (“MH”, “MR” or “MMR”).

6 After the settings have been specified, press the ▲ key until the screen for selecting the resolution is displayed.

Changing the Scanned Image Size

The setting for the size of the scan image can be changed from the screen for selecting the document mode.

1 Press the ▼ key in the screen for selecting the document mode (“ADF” or “BOOK”).

2 Using the ◀ and ▶ keys, select the scan size, and then press the **Menu Select** key.
The document mode selection screen appears again.

*To cancel the settings, press the **Cancel/C** key. The screen for selecting the document mode appears again.*

8

Replacing Consumables

Replacing the Toner Cartridge

Note

Failure to follow instructions as outlined in this manual could result in voiding your warranty.

Your machine uses four toner cartridges: black, yellow, magenta, and cyan. Handle the toner cartridges carefully to avoid spilling toner inside the machine or on yourself.

Install only new toner cartridges in your machine. If a used toner cartridge is installed, the indicator message will not clear.

The toner is nontoxic. If you get toner on your skin, wash it off with cool water and a mild soap. If you get toner on your clothes, lightly dust them off as best as you can. If some toner remains on your clothes, use cool, not hot water, to rinse the toner off.

CAUTION

If you get toner in your eyes, wash it out immediately with cool water and consult a doctor.

Refer to the following URL for recycling information.
Americas: http://printer.konicaminolta.com/products/recycle/index.asp
Europe: http://printer.konicaminolta.com

Note

Do not use refilled toner cartridges or unapproved toner cartridges. Any damage to the machine or quality problems caused by a refilled toner cartridge or unapproved toner cartridge will void your warranty. No technical support is provided to recover from these problems.

When replacing a toner cartridge, refer to the following table. For optimum print quality and performance, use only approved KONICA MINOLTA toner cartridges for your specific machine type, as listed in the table below. If you open the engine cover, you can find your machine type and the toner cartridge part numbers on the consumables reorder label inside your machine.

Machine Type	Machine Part Number	Toner Cartridge Type	Toner Cartridge Part Number
AM	5250225-100	Standard-Capacity Toner Cartridge - Yellow (Y)	1710587-001
		Standard-Capacity Toner Cartridge - Magenta (M)	1710587-002
		Standard-Capacity Toner Cartridge - Cyan (C)	1710587-003
		High-Capacity Toner Cartridge - Black (K)	1710587-004
		High-Capacity Toner Cartridge - Yellow (Y)	1710587-005
		High-Capacity Toner Cartridge - Magenta (M)	1710587-006
		High-Capacity Toner Cartridge - Cyan (C)	1710587-007
EU	5250225-200 5250225-400	Standard-Capacity Toner Cartridge - Yellow (Y)	1710589-001
		Standard-Capacity Toner Cartridge - Magenta (M)	1710589-002
		Standard-Capacity Toner Cartridge - Cyan (C)	1710589-003
		High-Capacity Toner Cartridge - Black (K)	1710589-004
		High-Capacity Toner Cartridge - Yellow (Y)	1710589-005
		High-Capacity Toner Cartridge - Magenta (M)	1710589-006
		High-Capacity Toner Cartridge - Cyan (C)	1710589-007
AP	5250225-350	Standard-Capacity Toner Cartridge - Yellow (Y)	1710590-001
		Standard-Capacity Toner Cartridge - Magenta (M)	1710590-002
		Standard-Capacity Toner Cartridge - Cyan (C)	1710590-003
		High-Capacity Toner Cartridge - Black (K)	1710590-004
		High-Capacity Toner Cartridge - Yellow (Y)	1710590-005
		High-Capacity Toner Cartridge - Magenta (M)	1710590-006
		High-Capacity Toner Cartridge - Cyan (C)	1710590-007
GC	5250225-600	Standard-Capacity Toner Cartridge - Yellow (Y)	1710599-001
		Standard-Capacity Toner Cartridge - Magenta (M)	1710599-002
		Standard-Capacity Toner Cartridge - Cyan (C)	1710599-003
		High-Capacity Toner Cartridge - Black (K)	1710599-004
		High-Capacity Toner Cartridge - Yellow (Y)	1710599-005
		High-Capacity Toner Cartridge - Magenta (M)	1710599-006
		High-Capacity Toner Cartridge - Cyan (C)	1710599-007

Keep toner cartridges:

- In their packaging until you're ready to install them.
- In a cool, dry location away from sunlight (due to heat).

  The maximum storage temperature is 35° C (95° F) and the maximum storage humidity is 85% (noncondensing). If the toner cartridge is moved from a cold place to a warm, humid place, condensation may occur, degrading print quality. Allow the toner to adapt to the environment for about one hour before use.

- Level during handling and storage.

  Do not hold, stand or store cartridges on their ends or turn them upside down; the toner inside the cartridges may become caked or unequally distributed.

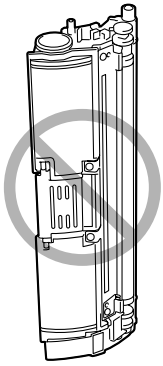

- Away from salty air and corrosive gases such as aerosols.

To Replace a Toner Cartridge

Note

Be careful not to spill toner while replacing a toner cartridge. If toner spills, immediately wipe it off with a soft, dry cloth.

When a toner cartridge becomes empty, the messages `X TONER EMPTY` and `CHANGE X TONER` (X indicates the toner color) alternately appear. Follow the procedure described below to replace the toner cartridge.

1 Check the display to see which color of toner is empty.
As an example, the procedure for replacing the cyan toner cartridge is described below.

2 Press the **TC Change** key.

The messages `REPLACE MODE` and `CHANGE C TONER` alternately appear, and the cyan toner cartridge is moved so that it can be replaced.

*Press the **TC Change** key once to move the cyan toner cartridge so that it can be replaced. With each additional press of the **TC Change** key, the black, yellow, then magenta toner cartridge moves so that they can be replaced.*

3

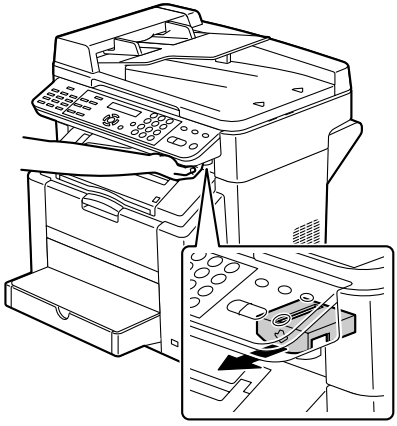

The scanner unit cannot be released if the ADF has been opened. Be sure to gently close the ADF first, then release the scanner unit.

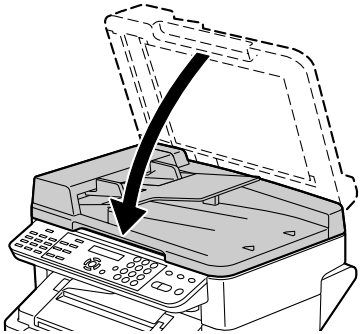

4

Be careful not to touch the plate on the back of the scanner unit.

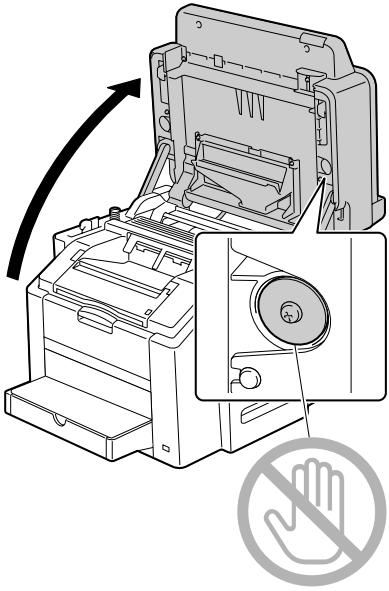

5

Do not touch the transfer belt.

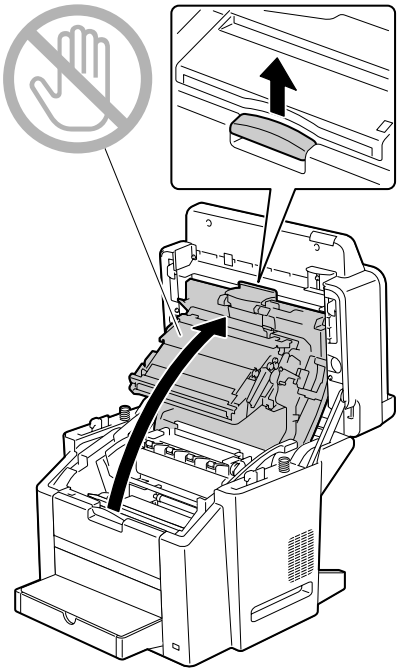

If there is media in the output bin, remove it.

Before opening the engine cover, be sure to fold up the output bin.

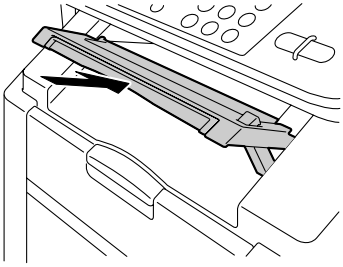

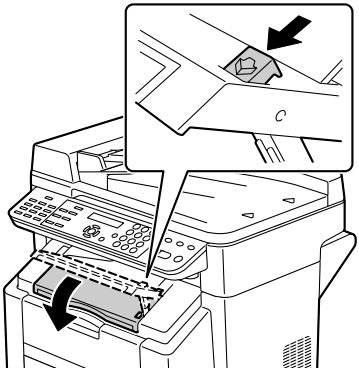

6

You can identify the toner cartridge by the color of the handle and by the letter molded into the handle: C (cyan), M (magenta), Y (yellow) and K (black).

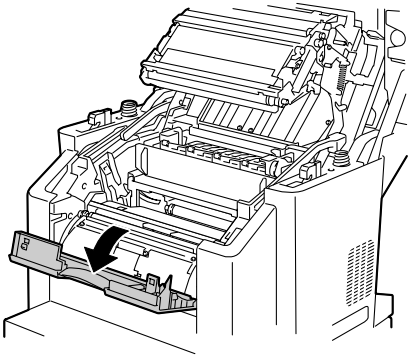

7

Do not manually rotate the toner cartridge carousel. In addition, do not rotate the carousel with force; otherwise it may be damaged.

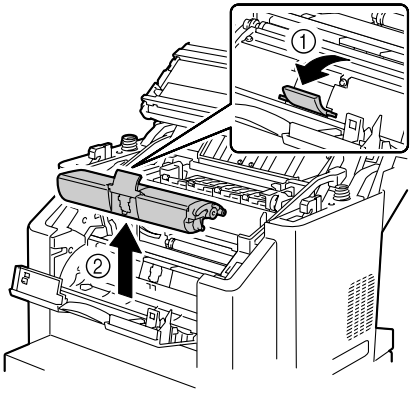

Note

Dispose of the empty toner cartridge according to your local regulations. Do not burn the toner cartridge.

8

Make sure that the toner roller cover is securely attached before shaking the toner cartridge.

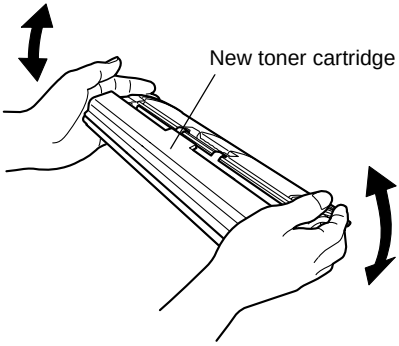

9

Do not touch or scratch the toner roller.

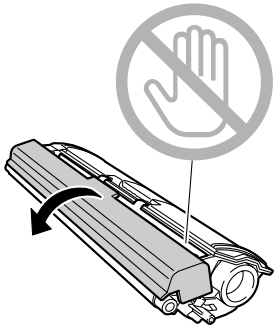

10

Before inserting the toner cartridge, make sure that the color of the toner cartridge to be installed is the same as the label on the toner cartridge carousel.

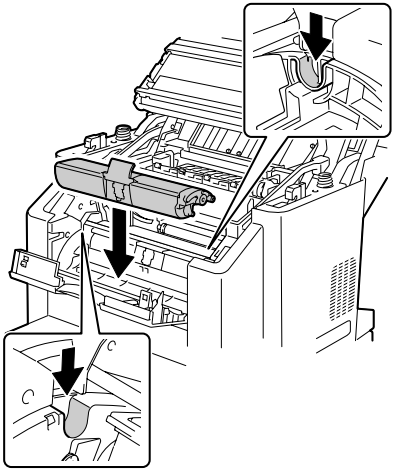

11

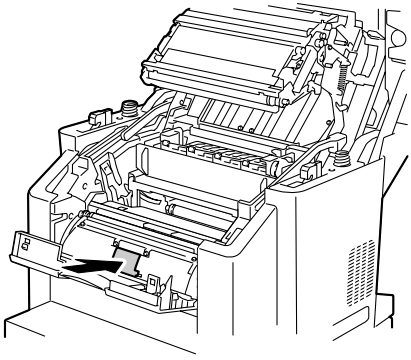

12

Before closing the engine cover, be sure to close the front cover. The front cover cannot be closed after the engine cover is closed.

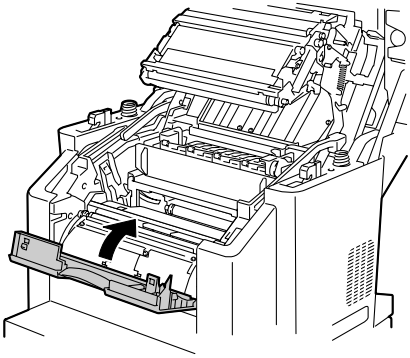

13

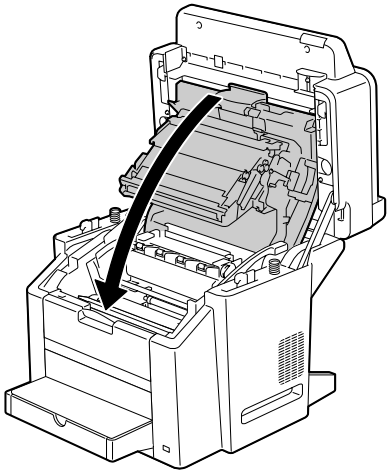

14

When the scanner unit is closed, the black toner cartridge automatically moves so that it can be replaced. With each press of the ***TC Change*** *key, the yellow, then magenta toner cartridge moves so that it can be replaced.*

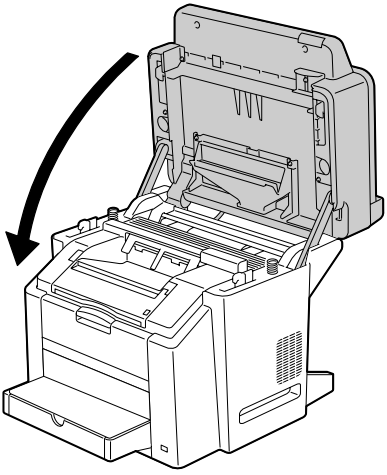

15 Press the **Stop/Reset** key.

The message is erased from the message window, and machine is reset so that it can continue printing.

If no operation is performed for more than 30 seconds after the scanner unit is closed, the machine is automatically reset so that it can print.

The machine must complete a calibration cycle (less than 2 minutes) after a toner cartridge has been replaced. If you open a cover before the machine is reset, the calibration stops, then starts over again after the cover is closed.

Replacing the Drum Cartridge

When the drum cartridge reaches the end of its service life, the messages `DRUM LIFE END` and `CHANGE DRUM` alternately appear. Follow the procedure described below to replace the drum cartridge.

1

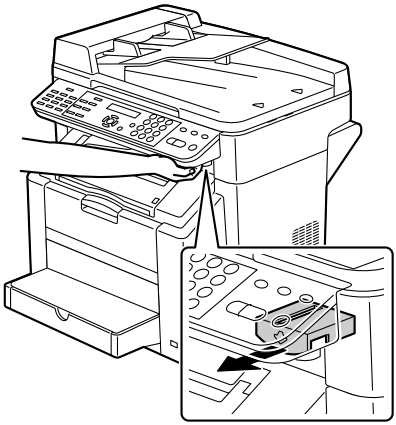

The scanner unit cannot be released if the ADF has been opened. Be sure to gently close the ADF first, then release the scanner unit.

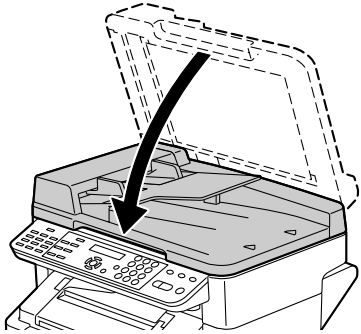

2

Be careful not to touch the plate on the back of the scanner unit.

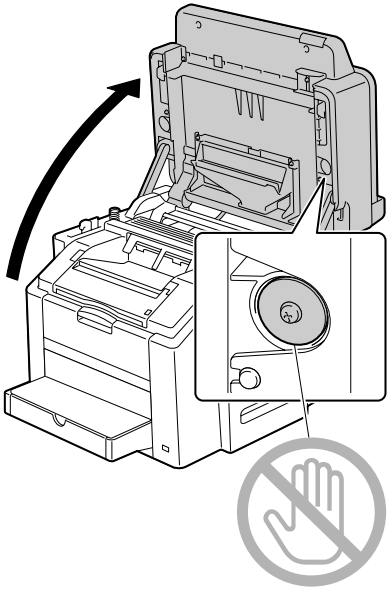

3

Do not touch the transfer belt.

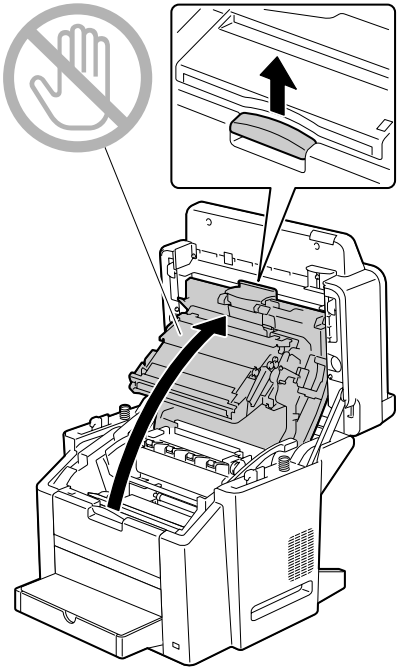

If there is media in the output bin, remove it.

Before opening the engine cover, be sure to fold up the output bin.

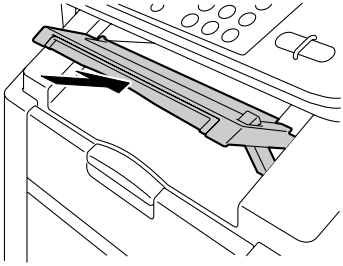

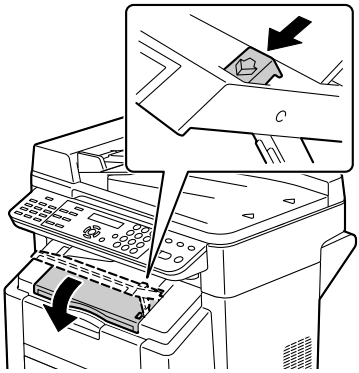

4

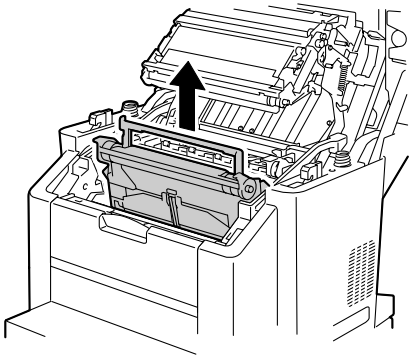

Note

Dispose of the used drum cartridge according to your local regulations. Do not burn the drum cartridge.

5

Do not touch the OPC drum on the drum cartridge.

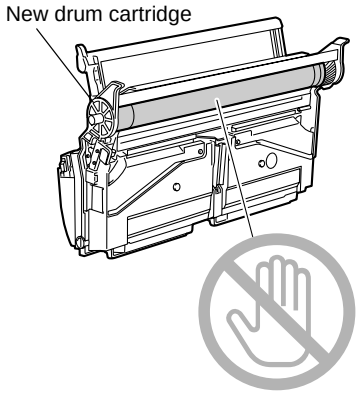

6

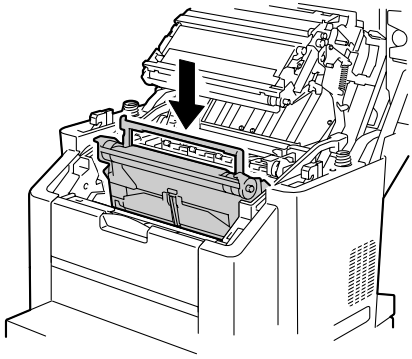

7

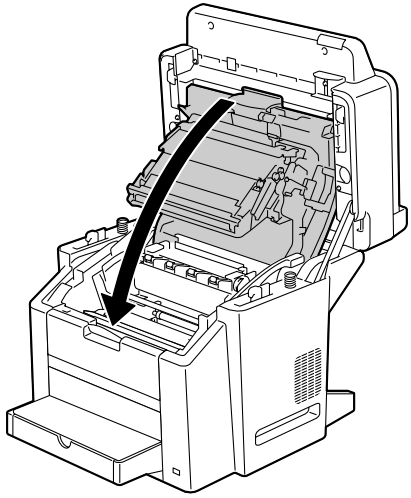

8

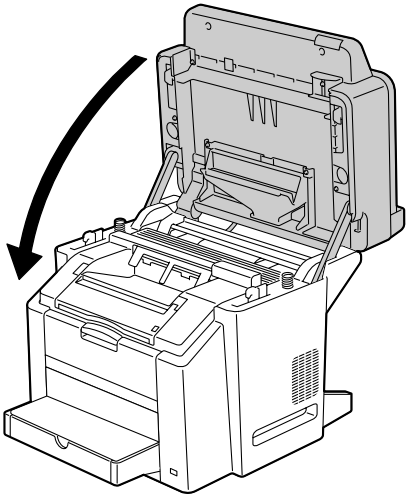

The machine must complete a calibration cycle (less than 2 minutes) after a toner cartridge has been replaced. If you open a cover before the machine is reset, the calibration stops, then starts over again after the cover is closed.

9

Maintenance

Maintaining the Machine

CAUTION

Read all caution and warning labels carefully, making sure to follow any instructions contained in them. These labels are located on the inside of the machine's covers and the interior of the body.

Handle the machine with care to preserve its life. Abuse handling may cause damage and void your warranty. If dust and paper scraps remain on the inside or outside of the machine, machine performance and print quality will suffer, so the machine should be cleaned periodically. Keep the following guidelines in mind.

WARNING!

Turn off the machine, unplug the power cord, and disconnect interface cable before cleaning. Do not spill water or detergent into the machine; otherwise the machine will be damaged and an electric shock may occur.

CAUTION

The fuser unit is hot. When the engine cover is opened, the fuser unit temperature drops gradually (one hour wait time).

- Be careful when cleaning the inside of the machine or removing media misfeeds, as the fuser unit and other internal parts may be very hot.
- Do not place anything on top of the machine.
- Use a soft cloth to clean the machine.
- Never spray cleaning solutions directly on the machine's surface; the spray could penetrate through the air vents of the machine and damage the internal circuits.
- Avoid using abrasive or corrosive solutions or solutions that contain solvents (such as alcohol and benzene) to clean the machine.
- Always test any cleaning solution (such as mild detergent) on a small inconspicuous area of your machine to check the solution's performance.
- Never use sharp or rough implements, such as wire or plastic cleaning pads.
- Always close the machine's covers gently. Never subject the machine to vibration.

- Do not cover the machine immediately after using it. Turn it off and wait until it cools down.
- Do not leave the machine's covers open for any length of time, especially in well-lit places; light may damage the drum cartridge.
- Do not open the machine's covers during printing.
- Do not tap media stacks on the machine.
- Do not lubricate or disassemble the machine.
- Do not tilt the machine.
- Do not touch the electrical contacts, gears, or laser devices. Doing so may damage the machine and cause the print quality to deteriorate.
- Keep media in the output bin at a minimum level. If the media is stocked too high, your machine may experience media misfeeds and excessive media curl.
- Make sure two people are available to lift the machine when moving it.
  Keep the machine level to avoid toner spillage.
- When lifting the machine, grasp the areas shown in the figure.

Do not lift the machine with Tray 2 together.

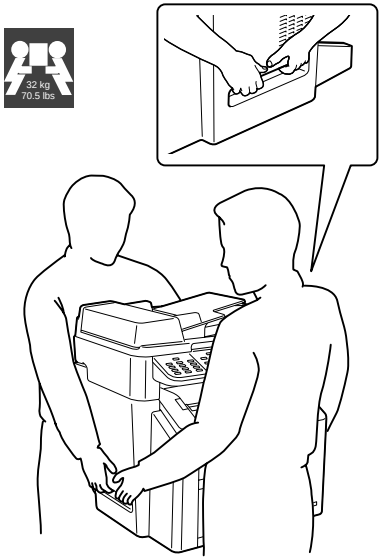

- If you get toner on your skin, wash it off with cool water and a mild soap.

CAUTION

If you get toner in your eyes, wash it out immediately with cool water and consult a doctor.

- Make sure any parts removed during cleaning are replaced before you plug in the machine.

Cleaning the Machine

CAUTION

Be sure to turn off the machine and unplug the power cord before cleaning.

Use a soft, dry cloth only.

Exterior

Control Panel

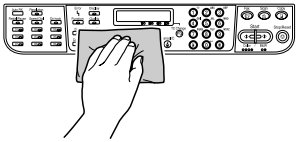

Ventilation Grill

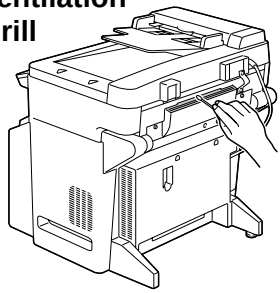

Machine Exterior

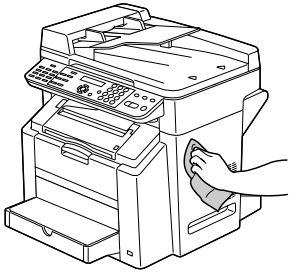

Filter

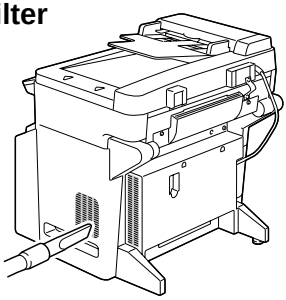

Original Glass

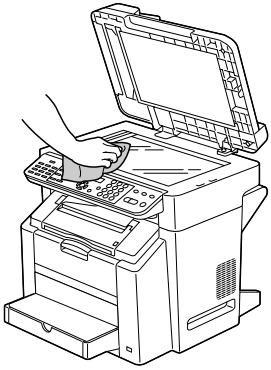

Original Cover Pad

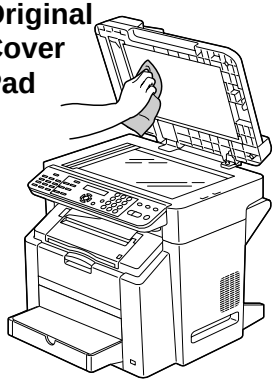

Interior

Cleaning the Media Feed Roller and Laser Lens

1

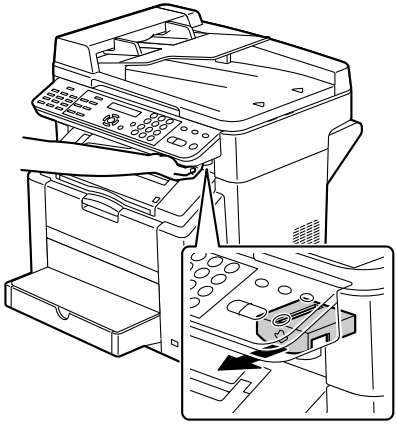

The scanner unit cannot be released if the ADF has been opened. Be sure to gently close the ADF first, then release the scanner unit.

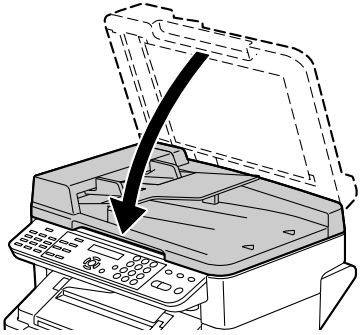

2

Be careful not to touch the plate on the back of the scanner unit.

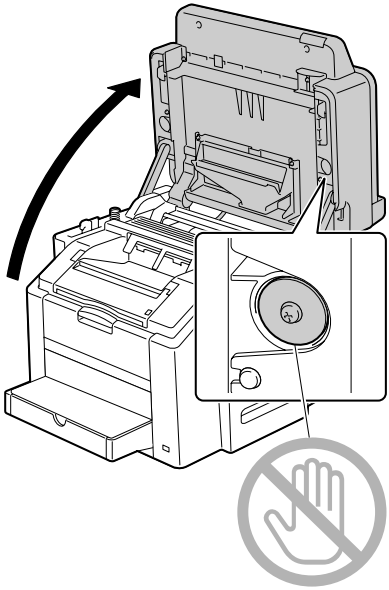

3

Do not touch the transfer belt.

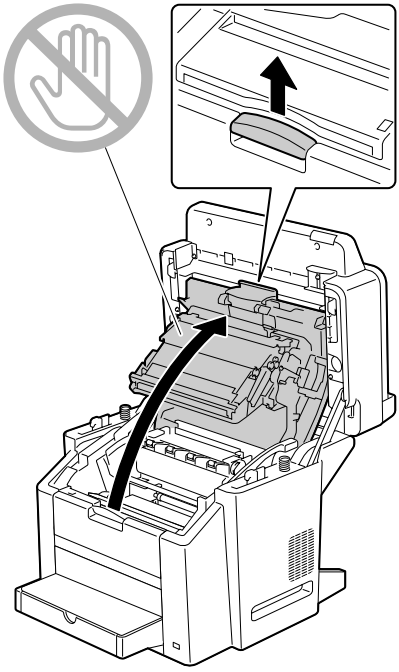

If there is media in the output bin, remove it.

Before opening the engine cover, be sure to fold up the output bin.

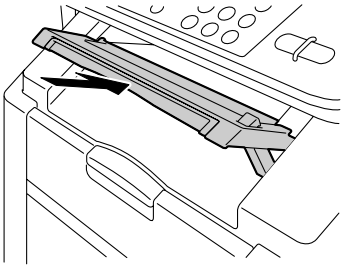

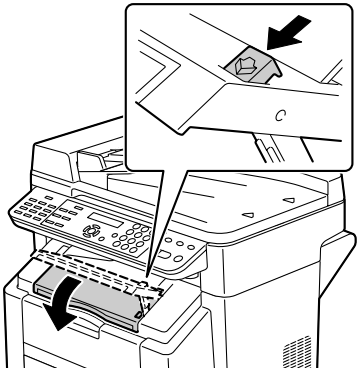

4

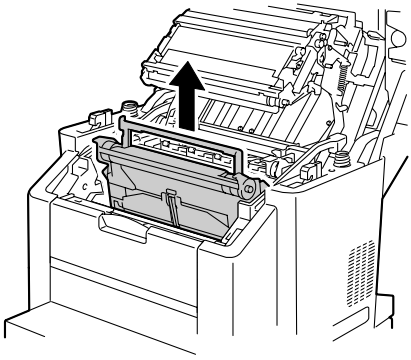

Note

Position the removed drum cartridge as shown in the illustration at the right. Be sure to keep the drum cartridge horizontal and place it where it will not become dirty. Do not leave the drum cartridge removed for more than 15 minutes, and do not place the removed drum cartridge in a location where it would be exposed to direct light (such as sunlight).

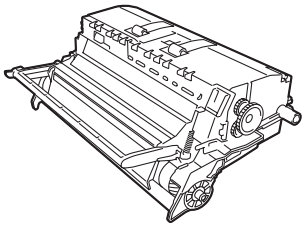

5

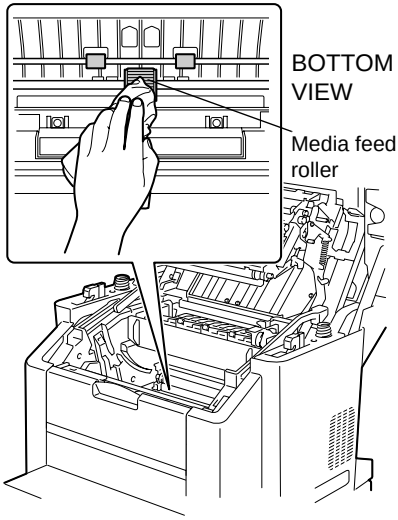

6

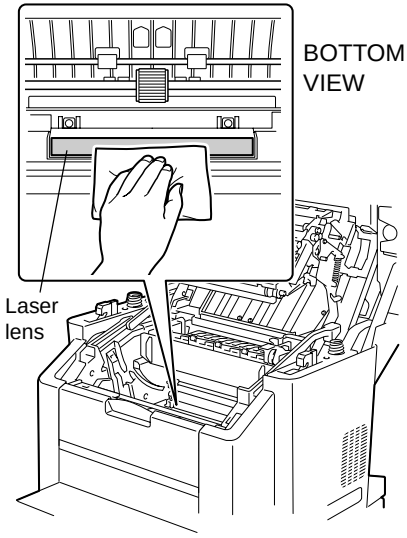

7

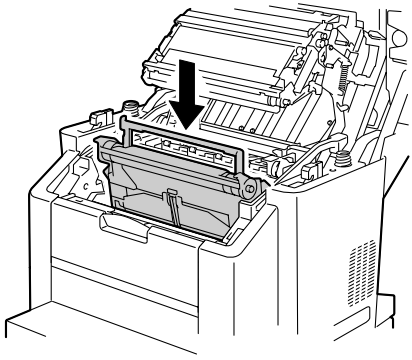

8

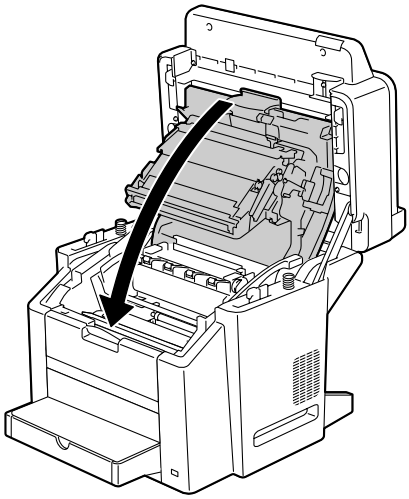

9

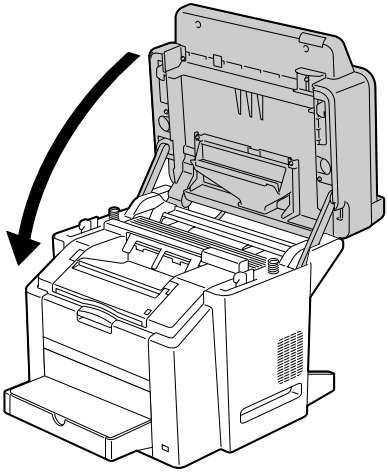

Cleaning the Duplex Option Feed Rollers

1

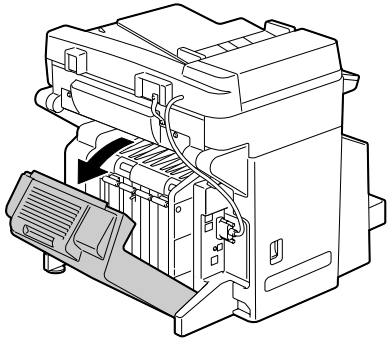

2

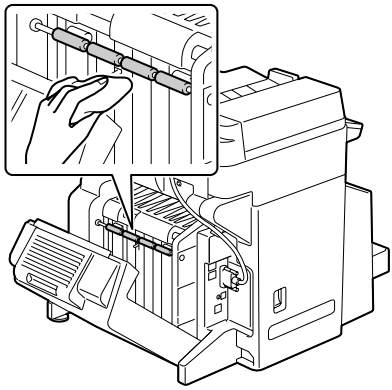

3

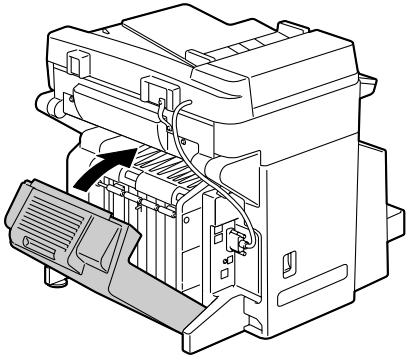

Cleaning the Media Feed Rollers for Tray 2

1

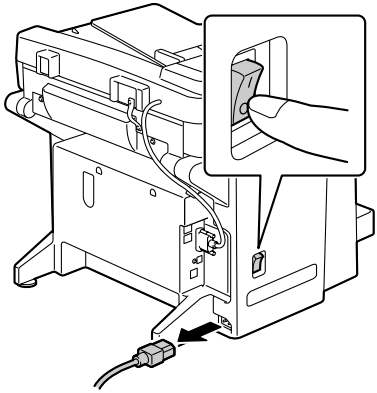

2

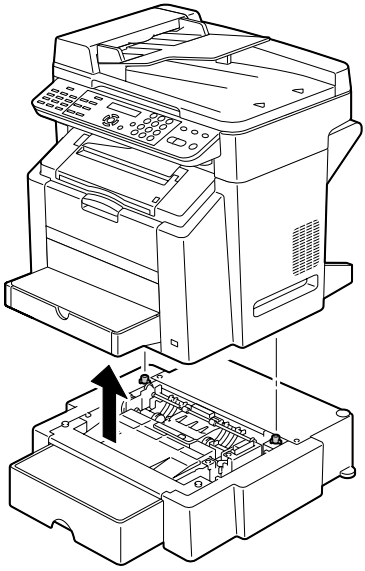

3

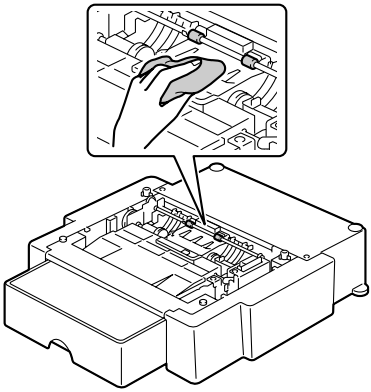

4

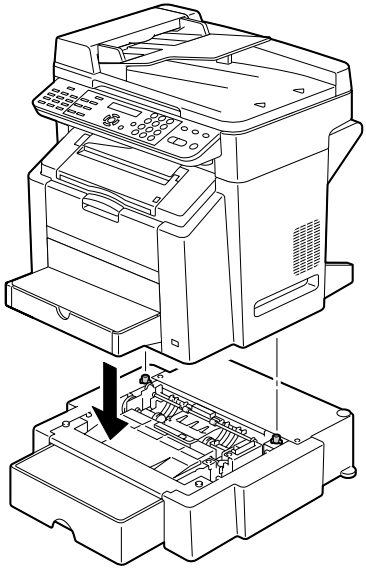

Cleaning the Media Feed Rollers for the ADF

1

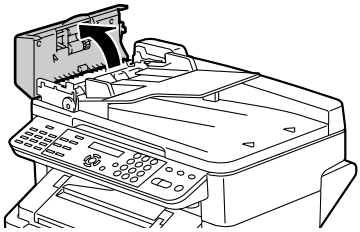

2

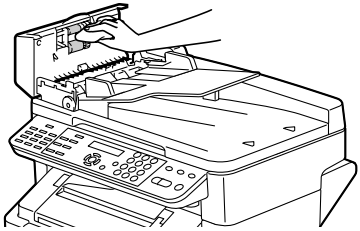

3

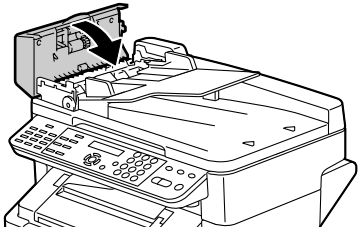

Storing the Machine

Note

If this machine is not to be used for an extended period of time, store it with the fuser separator levers moved as far back as possible.

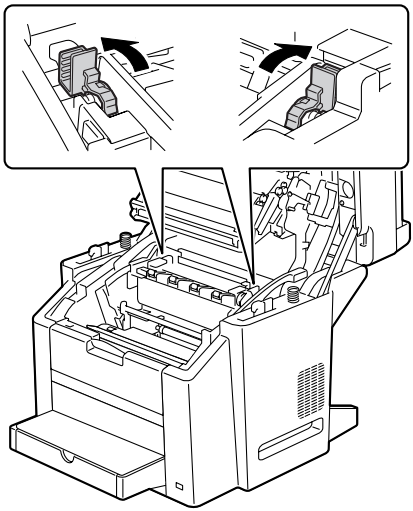

10

Troubleshooting

Introduction

This chapter provides information to aid you in resolving machine problems you may encounter, or at least guide you to the proper sources for help.

Preventing Media Misfeeds	page 143
Understanding the Media Path	page 144
Clearing Media Misfeeds	page 144
Solving Problems with Media Misfeeds	page 159
Solving Other Problems	page 162
Solving Problems with Printing Quality	page 168
Status, Error, and Service Messages	page 175

Preventing Media Misfeeds

Make sure that...
Media matches the machine specifications.
Media is flat, especially on the leading edge.
The machine is on a hard, flat, level surface.
You store media in a dry location away from moisture and humidity.
The output bin is positioned horizontally when postcards are being printed.
You remove transparencies from the output bin immediately after printing to avoid static buildup.
You always adjust the media guides in Tray 1 after inserting the media *(a guide that is not properly adjusted can cause poor print quality, media misfeeds, and machine damage)*.
You load the media printing-side up in the tray *(many manufacturers place an arrow on the end of the wrapper to indicate the printing side)*.

Avoid...
Media that is folded, wrinkled, or excessively curled.
Double feeding *(remove the media and fan the sheets—they may be sticking together)*.
Fanning transparencies since this causes static.
Loading more than one type/size/weight of media in a tray at the same time.
Overfilling the trays.
Allowing the output bin to overfill *(the output bin has a 100-sheet capacity—misfeeding may occur if you allow more than 100 sheets of media to accumulate at one time)*.
Allowing the output bin to fill with more than a few transparencies.

Understanding the Media Path

Understanding the media path will help you locate media misfeeds.

1. ADF media feed rollers
2. Document feed tray
3. Document output tray
4. Fuser unit
5. Duplex option
6. Tray 2 (optional)
7. Tray 1
8. Toner cartridge carousel
9. Drum cartridge
10. Transfer belt unit
11. Output bin

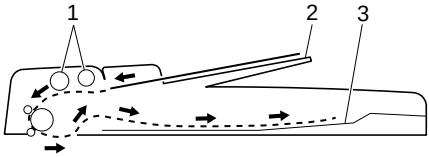

Document path (front view)

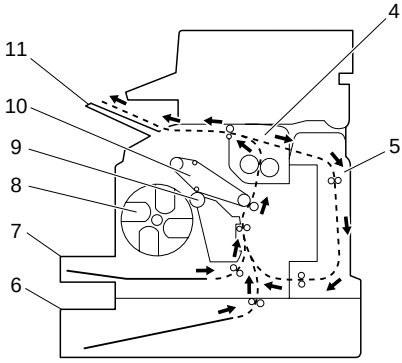

Media path (side view)

Clearing Media Misfeeds

To avoid damage, always remove misfed media gently, without tearing it. Any piece of media left in the machine, whether large or small, can obstruct the media path and cause further misfeeds. Do not reload media that has misfed.

Note

The image is not fixed on the media before the fusing process. If you touch the printed surface, the toner may stick to your hands, so be careful not to touch the printed face when removing the misfed media. Make sure not to spill any toner inside the machine.

CAUTION

Unfused toner can dirty your hands, clothes, or anything else it gets on. If you accidentally get toner on your clothes, lightly dust them off as best as you can. If some toner remains on your clothes, use cool, not hot water, to rinse the toner off. If toner gets on your skin, wash it off with cool water and a mild soap.

CAUTION

If you get toner in your eyes, wash it out immediately with cool water and consult a doctor.

If, after clearing the media misfeed, the misfeed message in the message window persists, open and close the engine cover. This should clear the misfeed message.

Media Misfeed Messages and Clearing Procedures

Media Misfeed Message	Page Reference
PAPER MISFEED ↕ (Displaying alternately) OPEN FRONT COVER	page 146
PAPER JAM ↕ (Displaying alternately) OPEN FRONT COVER	page 146
PAPER JAM ↕ (Displaying alternately) OPEN DUPLEX COVER	page 156
ORIGINAL DOC. JAM ↕ (Displaying alternately) OPEN DOC. FEED COVER	page 157

Clearing a Media Misfeed in the Machine

1

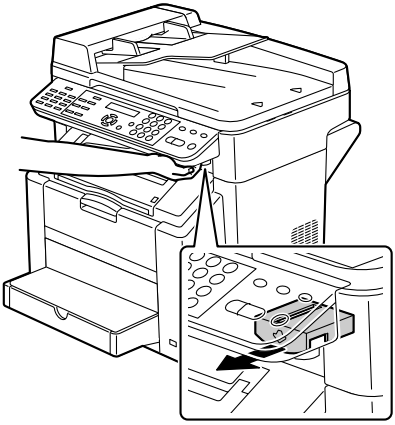

The scanner unit cannot be released if the ADF has been opened. Be sure to gently close the ADF first, then release the scanner unit.

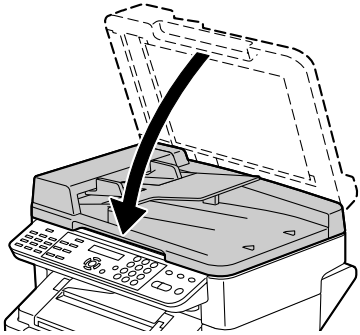

2

Be careful not to touch the plate on the back of the scanner unit.

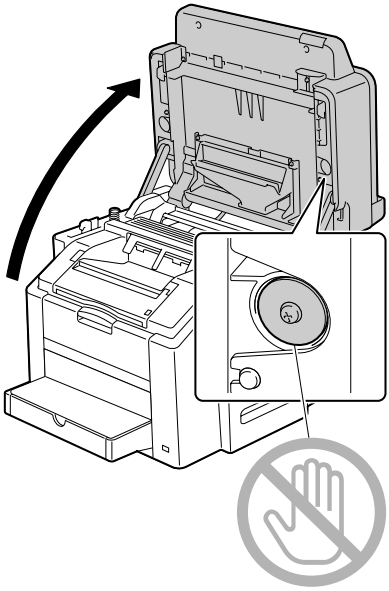

3

Do not touch the transfer belt.

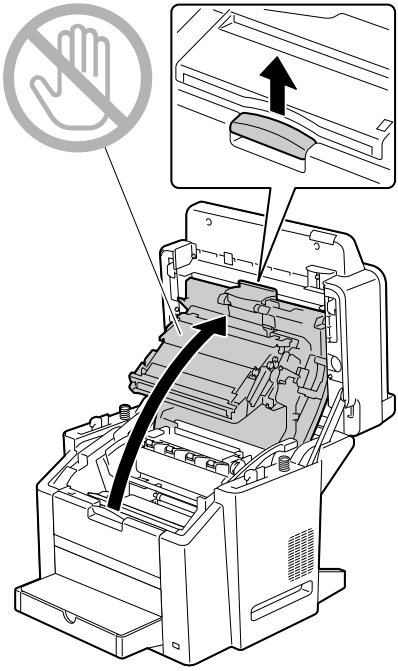

If there is media in the output bin, remove it.

Before opening the engine cover, be sure to fold up the output bin.

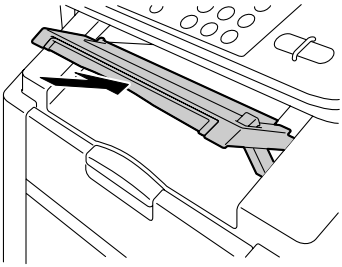

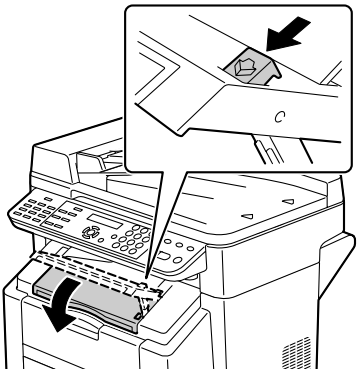

4

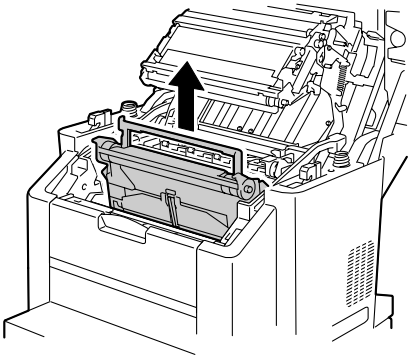

Note

Position the removed drum cartridge as shown in the illustration at the right. Be sure to keep the drum cartridge horizontal and place it where it will not become dirty. Do not leave the drum cartridge removed for more than 15 minutes, and do not place the removed drum cartridge in a location where it would be exposed to direct light (such as sunlight).

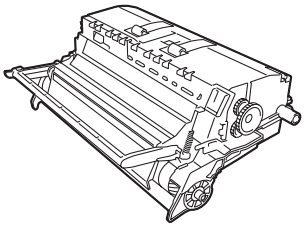

5

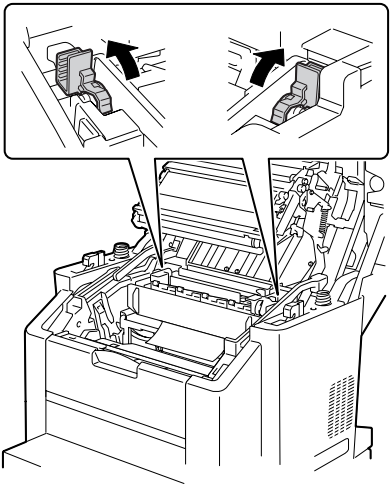

6

Always remove the misfed media in the feed direction as shown only.

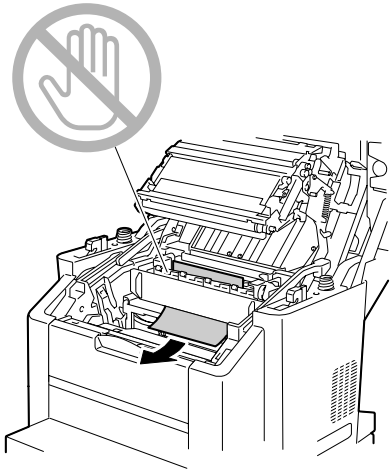

7

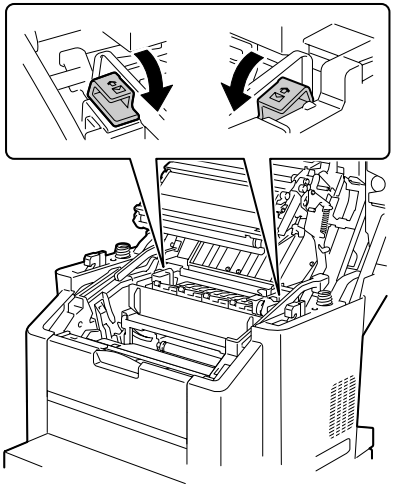

8

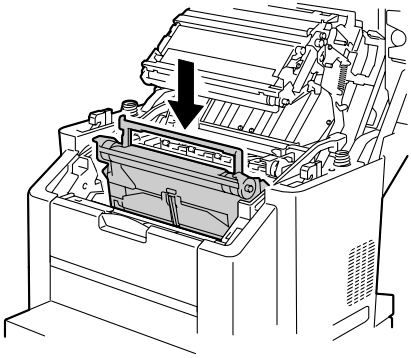

9

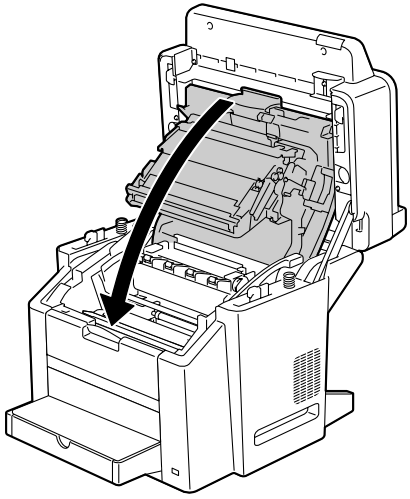

10

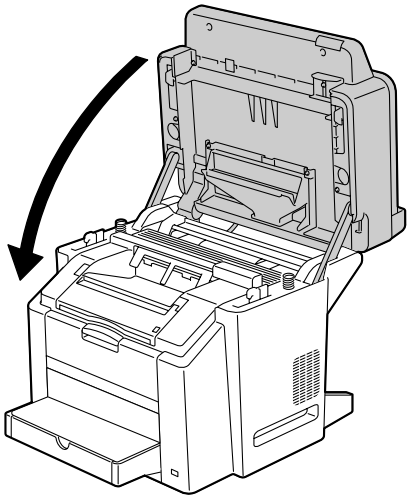

11

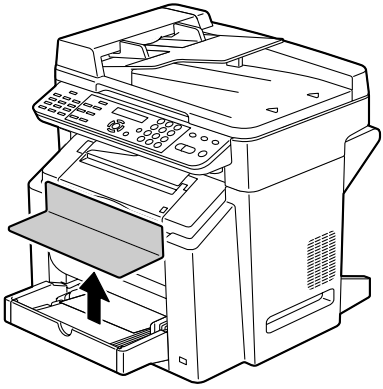

12

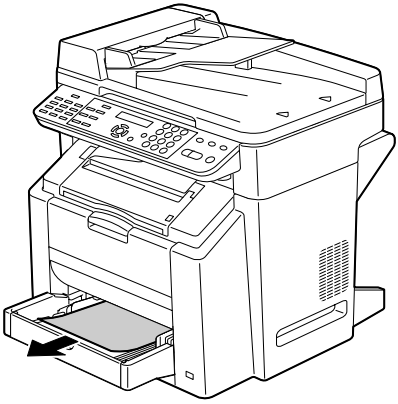

13

If the paper in Tray 2 is being used, perform the procedure starting from step 14 for clearing a media misfeed.

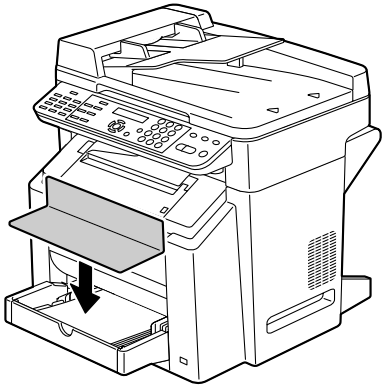

14

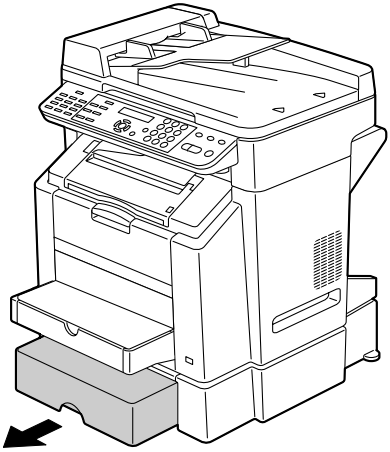

15

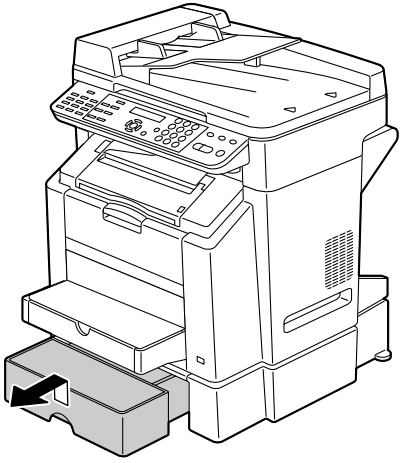

16

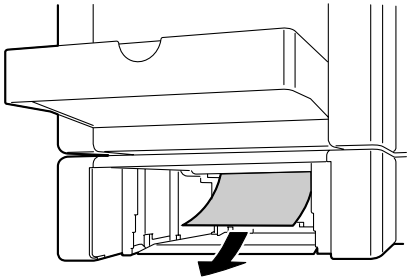

17

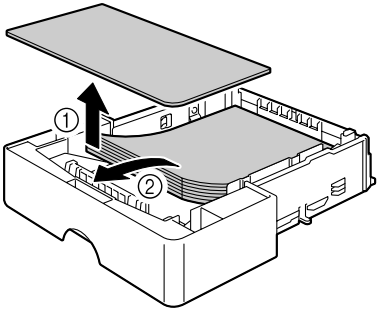

18

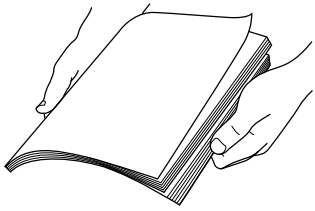

19

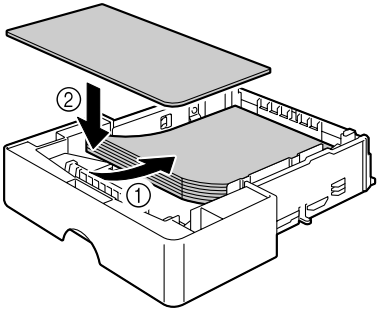

20

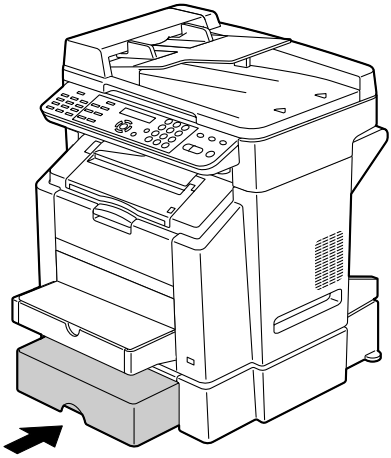

Clearing a Media Misfeed from the Duplex Option

1

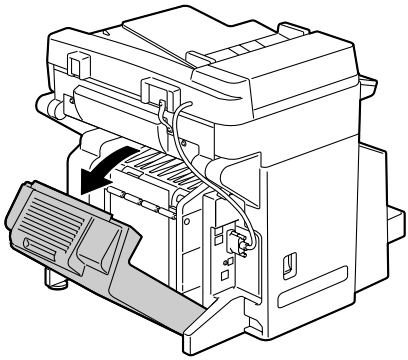

2

Always remove the misfed media in the feed direction as shown only.

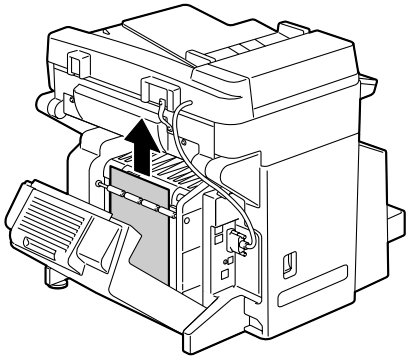

3

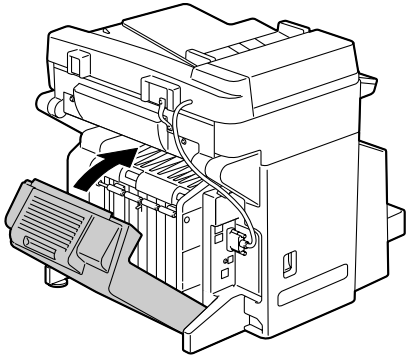

Clearing a Media Misfeed from the ADF

1

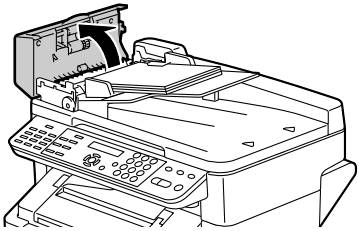

2

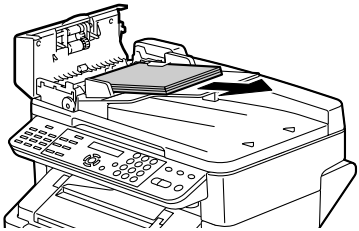

3

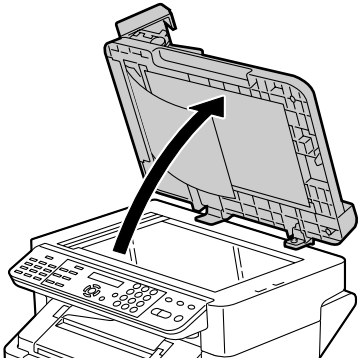

4

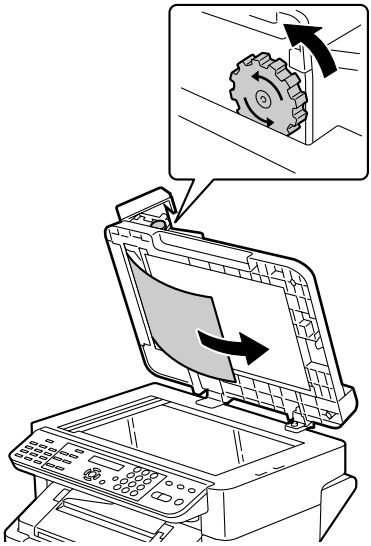

5

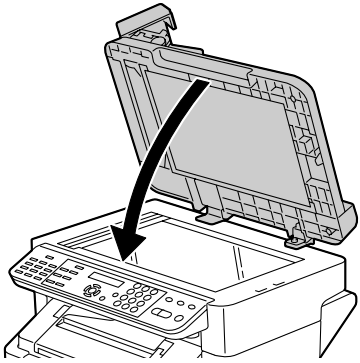

6

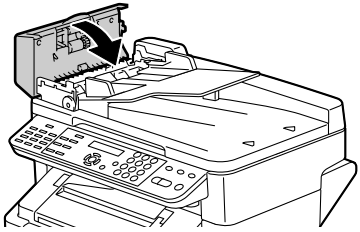

Solving Problems with Media Misfeeds

Frequent misfeeds in any area indicate that area should be checked, repaired, or cleaned. Repeated misfeeds may also happen if you're using unsupported print media or original media.

Symptom	Cause	Solution
Several sheets go through the machine together.	The front edges of the media are not even.	Remove the media and even up the front edges, then reload it.
	The media is moist from humidity.	Remove the moist media and replace it with new, dry media.
	Too much static electricity is present.	Do not fan transparencies.
Media misfeed message stays on.	Engine cover needs to be opened and closed again to reset the machine.	Open and close the engine cover again.
	Some media remains misfed in the machine.	Recheck the media path and make sure that you have removed all of the misfed media.
Duplex option misfeeds.	Unsupported media (wrong size, thickness, type, etc.) is being used.	Use KONICA MINOLTA-approved media. See "Specifications" on page 38. Also, refer to printer. konicaminolta. com for a complete list of currently approved media.
		Plain paper, recycled paper can be autoduplexed if the duplex option is installed and the media type is set properly in the driver. See "Specifications" on page 38.
		Make sure that you have not mixed media types in Tray 1.
		Do not duplex, envelopes, labels, letter head, postcards, thick stock, glossy media, or transparencies.
	Media is still being misfed.	Recheck the media path inside the duplex option and make sure that you have removed all of the misfed media.

Symptom	Cause	Solution
Media is misfed in the ADF.	The loaded document does not meet the specifications.	Load the correct document. For details on the documents that can be loaded, refer to “Documents that can be Loaded into the ADF” on page 67.
	The loaded document exceeds the maximum capacity.	Load the document so that it does not exceed the maximum capacity. For details on the documents that can be loaded, refer to “Documents that can be Loaded into the ADF” on page 67.
	The document guides were not slid against the edges of the document.	Slide the document guides against the edges of the document. For details on the loading the document, refer to “Loading a Document into the ADF” on page 70.
Media is misfeeding.	The media is not correctly positioned in the tray.	Remove the misfed media and reposition the media properly in the tray.
	The number of sheets in the tray exceeds the maximum allowed.	Remove the excess media and reload the correct number of sheets in the tray.
	The media guides are not correctly adjusted to the media size.	Adjust the media guides in the Tray 1 to match the size of the media.
	Warped or wrinkled media is loaded in the tray.	Remove the media, smooth it out, and reload it. If it still misfeeds, do not use that media.
	The media is moist from humidity.	Remove the moist media and replace it with new, dry media.
	Custom-sized media, envelopes, labels, postcards, thick stock, letterhead, glossy media, or transparencies are loaded in Tray 2.	Special media must be loaded in Tray 1 only.
	The recommended transparency or label sheet is facing the wrong way in Tray 1.	Load the transparencies or label sheets according to the manufacturer’s instructions.

Symptom	Cause	Solution
Media is mis-feeding.	Envelopes are facing the wrong way in Tray 1.	Load the envelopes in Tray 1 with the flaps facing down.
		If the flaps are on the long edge, load the envelopes with the flap toward the left of the machine with the flaps facing down.
	Transparencies have collected static elec-tricity in the tray.	Remove the transparencies and load them in Tray 1 one sheet at a time. Do not fan transparencies before loading them.
	Unsupported media (wrong size, thick-ness, type, etc.) is being used.	Use KONICA MINOLTA-approved media. See “Specifications” on page 38. Also, refer to printer. konicaminolta. com for a complete list of currently approved media.
	The media feed roller is dirty.	Clean the media feed roller. For more details, refer to “Interior” on page 129.

Solving Other Problems

To order KONICA MINOLTA consumables, go to www.q-shop.com.

Symptom	Cause	Solution
Machine power is not on.	The power cord is not correctly plugged into the outlet.	Turn off the machine, confirm that the power cord is correctly plugged into the outlet, and then turn on the machine.
	Something is wrong with the outlet connected to the machine.	Plug another electrical appliance into the outlet and see whether it operates properly.
	The power switch is not correctly turned on (I position).	Turn the power switch off (O position), then turn it back to the on (I position).
	The machine is connected to an outlet with a voltage or frequency that does not match the machine specifications.	Use a power source with the specifications listed in appendix A, “Technical Specifications.”
The control panel displays `TONER LOW` much sooner than expected.	One of the toner cartridges may be defective.	Remove the toner cartridges and check for damage. If it is damaged, replace it.
	You printed with heavy toner coverage.	See specifications in Appendix A.
You can’t print the machine status list.	The tray is empty.	Check that at least Tray 1 is loaded with media, in place, and secure.
	There is a media misfeed.	Clear the media misfeed.
When the paper type or paper size for Tray 1 is changed, `Warn Fax` appears.	If a fax is received, it could not be printed on paper of the currently specified type or size. However, copy and print operations can be performed.	To print a received fax, change the paper type to `PLAIN PAPER` and the paper size to A4 or `LETTER`.

Symptom	Cause	Solution
Images cannot be printed from the digital camera.	The digital camera transfer mode is not set to PictBridge.	Set the digital camera transfer mode to PictBridge. *The machine supports only PictBridge-enabled digital camera.*
	The paper size specified with the digital camera differs from the paper size specified with this machine. The message “Please confirm the printer.” appears on the digital camera, and no error message appears on this machine.	Specify the same paper size with the digital camera and with this machine.
	A paper size other than A4 or LETTER was selected on this machine for layout printing. No error message appears on this machine.	Set the paper size on this machine to A4 or LETTER.

Symptom	Cause	Solution
Printing takes too much time.	The machine is set to a slow printing mode (for example, thick stock or transparency).	It takes more time to print with special media. When using regular paper, make sure that the media type is set properly in the driver.
	The machine is set to power saving mode.	It takes time for printing to start in power saving mode.
	The job is very complex.	Wait. No action needed.
	A toner cartridge for a different region or an unapproved toner cartridge is installed (`X TONER INCORRECT` is displayed in the message window).	Install a correct KONICA MINOLTA toner cartridge approved for your specific machine.
Blank pages are printed.	One or more of the toner cartridges are defective or empty.	Check the toner cartridges. The image will not print correctly or not at all, if the cartridges are empty.
	The wrong media is being used.	Check that the media type.
Not all pages print.	The Cancel key was pressed.	Make sure no one pressed the Cancel key while your job was printing.
	The tray is empty.	Check that the tray is loaded with media, in place, and secure.
	A document is printed with an overlay file which has been created by a non-magicolor 2490MF printer driver.	Print the overlay file using a magicolor 2490MF printer driver.
Some parts of the image are lost with 2in1 copying.	2in1 copying is being performed with Legal-sized documents. `x0.64`, which appears with `INCH` for 2in1 copying, is set to adjust the size to Letter size.	Press the ▲ or ▼ key to adjust the zoom ratio.

Symptom	Cause	Solution
Machine resets or turns off frequently.	The power cord is not correctly plugged into the outlet.	Turn off the machine, confirm that the power cord is correctly plugged into the outlet, and then turn on the machine.
	A system error occurred.	Contact Technical Support with the error information.
You are experiencing duplex problems.	Media or settings are not correct.	For autoduplexing, make sure that you have a duplex option installed.
		Make sure that you are using correct media. ■ See “Specifications” on page 38. Also, refer to printer. konicaminolta. com for a complete list of currently approved media. ■ Do not duplex custom-sized media, envelopes, labels, postcards, thick stock, letterhead, glossy media, or transparencies. ■ Make sure that you have not mixed media types in Tray 1.
		Make sure the duplex option is installed and declared in the printer driver (Device Options Setting tab).
		In the printer driver (Layout/Double-Sided), choose “Short Edge Binding” (flipped as on a clipboard) or “Long Edge Binding” (flipped as in a loose-leaf notebook).
		Set duplex (Double-Sided) copying. For details on setting duplex (Double-Sided) copying, refer to “Setting Duplex (Double-Sided) Copying” on page 91.
		For N-up on duplexed pages, choose Collate only in the printer driver’s Basic Tab. Do not set collation in the application.

Symptom	Cause	Solution
With N-up on multiple copies, the output is incorrect.	Both the printer driver and the application have been set for collation.	For N-up on multiple copies, choose Collate only in the printer driver's Basic Tab. Do not set collation in the application.
Booklet Left and Right Binding output is incorrect.	Both the printer driver and the application have been set for collation.	For Booklet Left Binding and Booklet Right Binding, choose Collate only in the printer driver's Basic Tab. Do not set collation in the application.
You hear unusual noises.	The machine is not level.	Place the machine on a flat, hard, level surface.
	The tray is not installed correctly.	Remove the tray that you are printing from and reinsert it completely into the machine.
	There is a foreign object stuck inside the machine.	Turn off the machine and remove the object. If you cannot remove it, contact Technical Support.
When copying or scanning with the ADF, a band appears at the end of the image or paper (5 to 6 mm).	A malfunction may have occurred while paper was being transferred with the ADF.	If a band appears in the copy after copying, select a copy density setting that is one level darker. If a band appears in the image after scanning, scan using the original glass.
While scanning with the ADF at 600 dpi, the image has become lighter and the background has become darker.	Immediately after the machine is turned on, the lamp intensity increases. Therefore, the image may become lighter and the background may become darker.	If the image becomes lighter or darker, scan using the original glass. In addition, perform the scan operation after turning the machine on and lighting the lamp for an hour and a half or more.

Symptom	Cause	Solution
The web-based utility cannot be accessed.	The PageScope Web Connection Administrator's password is incorrect.	The PageScope Web Connection Administrator password has a 6-character minimum and a 16-character maximum. For details of the PageScope Web Connection administrator password, refer to the magicolor 2490MF Reference Guide.
Media is wrinkled. 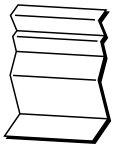	The media is moist from humidity or having water spilled on it.	Remove the moist media and replace it with new, dry media.
	The media feed roller or fuser unit is defective.	Check them for damage. If necessary, contact Technical Support with the error information.
	Unsupported media (wrong size, thickness, type, etc.) is being used.	Use KONICA MINOLTA-approved media. See “Specifications” on page 38. Also, refer to printer. konicaminolta. com for a complete list of currently approved media.
	Envelopes are being printed with the fuser separator levers in the plain paper position.	Before printing envelopes, place the fuser separator levers in the envelope position.

Solving Problems with Printing Quality

Symptom	Cause	Solution
Nothing is printed, or there are blank spots on the printed page. 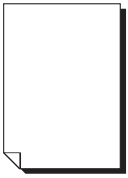	One or more of the toner cartridges may be defective.	Remove the toner cartridges and check if any is damaged.
	The drum cartridge may be defective.	Remove the drum cartridge and check for damage. If it is damaged, replace it.
	The media is moist from humidity.	Adjust the humidity for media storage. Remove the moist media and replace it with new, dry media.
	The media set in the printer driver mis-matches the media loaded in the machine.	Load the correct media in the machine.
	The power source does not match the machine specifica-tions.	Use a power source with the proper specifications.
	Several sheets are being fed at the same time.	Remove the media from the tray and check for static electricity. Fan plain paper or other media (but not transpar-encies), and replace it in the tray.
	Media is not set prop-erly in the tray(s).	Remove the media, tap it to straighten it out, return it to the tray, and realign the media guides.
Entire sheet is printed in black or color.	One or more of the toner cartridges may be defective.	Remove the toner cartridges and check for damage. If it is damaged, replace it.
	The drum cartridge may be defective.	Remove the drum cartridge and check for damage. If it is damaged, replace it.

Symptom	Cause	Solution
Image is too light; there is low image density.	Laser lens is dirty.	Clean the laser lens.
	The copy density is set too light.	Select a darker copy density.
	The media is moist from humidity.	Remove the moist media and replace with new, dry media.
	There is not much toner left in the cartridge.	Replace the toner cartridge.
	One or more of the toner cartridges may be defective.	Remove the toner cartridges and check for damage. If it is damaged, replace it.
	Media type is set incorrectly.	When printing envelopes, labels, postcards, thick stock, glossy media, or transparencies, specify the appropriate media type in the printer driver.
Image is too dark.	The copy density is set too dark.	Select a lighter copy density.
	The document was not pressed close enough against the original glass.	Position the document so that it is pressed close enough against the original glass. For details on positioning the document on the original glass, refer to “Placing a Document on the Original Glass” on page 69.
	One or more of the toner cartridges may be defective.	Remove the toner cartridges and check for damage. If it is damaged, replace it.
	The drum cartridge may be defective.	Remove the drum cartridge and check for damage. If it is damaged, replace it.

Symptom	Cause	Solution
Image is blurred; background is lightly stained; there is insufficient gloss of the printed image.	One or more of the toner cartridges may be defective.	Remove the toner cartridges and check for damage. If it is damaged, replace it.
	The drum cartridge may be defective.	Remove the drum cartridge and check for damage. If it is damaged, replace it.
	The original glass is dirty.	Clean the original glass. For details, refer to “Cleaning the Machine” on page 128.
	The original cover pad is dirty.	Clean the original cover pad. For details, refer to “Cleaning the Machine” on page 128.
The print or color density is uneven. 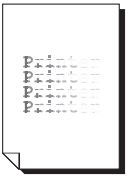	One or more of the toner cartridges may be defective or low.	Remove the toner cartridges and check for damage. If it is damaged, replace it.
	The drum cartridge is defective.	Remove the drum cartridge and check for damage. If it is damaged, replace it.
	The machine is not level.	Place the machine on a flat, hard, level surface.

Symptom	Cause	Solution
Irregular print or mottled image appears.	The media is moist from humidity.	Adjust the humidity in the media storage area. Remove the moist media and replace it with new, dry media.
	Unsupported media (wrong size, thickness, type, etc.) is being used.	Use KONICA MINOLTA-approved media. See “Specifications” on page 38. Also, refer to printer. konicaminolta. com for a complete list of currently approved media.
	One or more of the toner cartridges may be defective.	Remove the toner cartridges and check for damage. If it is damaged, replace it.
	The drum cartridge is defective.	Remove the drum cartridge and check for damage. If it is damaged, replace it.
	The fuser separator levers are adjusted for envelope printing.	Return the fuse separator levers to the plain paper setting.
There is insufficient fusing or the image comes off when rubbed.	The media is moist from humidity.	Remove the moist media and replace it with new, dry media.
	Unsupported media (wrong size, thickness, type, etc.) is being used.	Use KONICA MINOLTA-approved media. See “Specifications” on page 38. Also, refer to printer. konicaminolta. com for a complete list of currently approved media.
	Media type is set incorrectly.	When printing envelopes, labels, postcards, thick stock, or transparencies, specify the appropriate media type in the printer driver.
	The fuser separator levers are adjusted for envelope printing.	Return the fuse separator levers to the plain paper setting.

Symptom	Cause	Solution
There are toner smudges or residual images.	One or more of the toner cartridges are defective or installed incorrectly.	Remove the toner cartridges and check for damage. If it is damaged, replace it.
	The fuser separator levers are adjusted for envelope printing.	Return the fuse separator levers to the plain paper setting.
There are toner smudges on the back side of the page (whether or not it has been duplexed).	The media transfer roller is dirty.	Clean the media transfer roller.
		If you think the transfer roller should be replaced, contact Technical Support with the error information.
	The media path is dirty with toner.	Print several blank sheets and the excess toner should disappear.
	One or more of the toner cartridges are defective.	Remove the toner cartridges and check for damage. If it is damaged, replace it.
	The drum cartridge is defective.	Remove the drum cartridge and check for damage. If it is damaged, replace it.
Abnormal areas (white, black, or color) appear in a regular pattern. 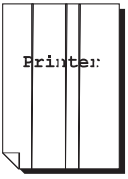	The laser lens is dirty.	Clean the laser lens.
	A toner cartridge may be defective.	Remove the toner cartridges with the color causing the abnormal image. Replace it with a new toner cartridge.
	The drum cartridge is defective.	Remove the drum cartridge and check for damage. If it is damaged, replace it.

Symptom	Cause	Solution
Image defects.	The laser lens is dirty.	Clean the laser lens.
	A toner cartridge may be leaking.	Remove the toner cartridges and check for damage. If it is damaged, replace it.
	A toner cartridge may be defective.	Remove the toner cartridge with the color causing the abnormal image. Replace it with a new toner cartridge.
	The drum cartridge may be defective.	Remove the drum cartridge and check for damage. If it is damaged, replace it.
Lateral lines or bands appear on image. 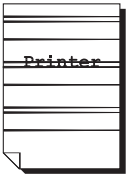	The machine is not level.	Place the machine on a flat, hard, level surface.
	The media path is dirty with toner.	Print several sheets and the excess toner should disappear.
	One or more of the toner cartridges may be defective.	Remove the toner cartridges and check for damage. If it is damaged, replace it.
	The drum cartridge is defective.	Remove the drum cartridge and check for damage. If it is damaged, replace it.
Colors look drastically wrong.	One or more of the toner cartridges may be defective.	Remove the toner cartridges and verify that the toner is distributed evenly on each cartridge roller, and reinstall the toner cartridges.
	One or more of the toner cartridges may be low or empty.	Check the control panel for an `X TONER LOW` or `X TONER EMPTY` message. If necessary, replace the specified toner cartridge.
Colors are not register-ing properly; colors are mixed or have page-to-pag e variation.	The engine cover is not properly closed.	Make sure that the engine cover is closed.
	The drum cartridge is not correctly seated.	Remove the drum cartridge and rein-stall it.
	One or more of the toner cartridges may be defective.	Remove the toner cartridges and check for damage. If it is damaged, replace it.
	The media is moist from humidity.	Remove the moist media and replace it with new, dry media.

Symptom	Cause	Solution
Line art does not print in color.	The line art setting for 2400 x 600 dpi requires Color Matching to be turned off.	In the printer driver, go to Quality tab and choose Off in the Color Matching.
		Lower the resolution to 1200 x 600 or 600 x 600 dpi.
The color has a poor reproduction or has poor color density.	The drum cartridge may be defective.	Remove the drum cartridge and check for damage. If it is damaged, replace it.

If the problem is not resolved, even after all of the above have been performed, contact Technical Support with the error information.

For contact information, refer to the Need Assistance sheet.

Status, Error, and Service Messages

Status, error, and service messages are displayed in the message window. They provide information about your machine and help you locate many problems. When the condition associated with a displayed message has changed, the message is cleared from the window.

Status Messages

This message...	means...	Do this...
CANCELLING JOB	The job is being cancelled.	No action needed.
ENERGY SAVE	The machine is in Energy Saver mode to reduce power consumption during periods of inactivity.	
IMAGING	The image from the digital camera is being rendered.	
PLEASE WAIT!	After replacing a toner cartridge, or after rebooting your machine after environmental changes, your machine automatically pauses to do an Auto-Image Density Control (AIDC) cycle. This process is provided to make reliable machine operation with optimum output quality possible.	
	The machine is warming up.	

Error Messages

For details on fax error messages, refer to the magicolor 2490MF Facsimile User's Guide.

This message...	means...	Do this...
:EMPTY	Tray 1 or Tray 2 ran out of paper.	Load media into the specified tray.
CANNOT CONNECT XXX Server	While the scanned document was being sent in Scan mode, a connection with the specified server could not be established.	Check the Network and E-mail settings and send the data again.
CANNOT GET IP SMTP Server	The IP address of the SMTP server could not be obtained from the DNS server.	Check the Network and E-mail settings and send the data again.
COMM. ERROR SMTP Server	While data was being sent in Scan mode, the connection to the server was cut.	Check the Network and E-mail settings and send the data again.
DISCONNECT SMTP Server	In Scan mode, the connection to the server was cut.	Check the Network and E-mail settings and send the data again.
DOC. FEED COVER OPEN ↕ (Displaying alternately) CLOSE DOC. FEED COVER	The ADF feed cover is open.	Close the ADF feed cover.
DOCUMENT COVER OPEN ↕ (Displaying alternately) CLOSE DOCUMENT COVER	The document is loaded into the ADF, but the ADF is open.	Close the ADF.

This message...	means...	Do this...
DRUM ↕ (Displaying alternately) END	The drum cartridge has reached the end of its service life.	Replace the drum cartridge.
DRUM ↕ (Displaying alternately) LOW	The drum cartridge is near the end of its life.	Prepare a new drum cartridge.
DRUM CARTRIDGE NOT INSTALLED	The drum cartridge is not installed.	Install the drum cartridge.
DRUM LIFE END ↕ (Displaying alternately) CHANGE DRUM	The waste toner bottle in the drum cartridge is full.	Replace the drum cartridge.
DUPLEX COVER OPEN ↕ (Displaying alternately) CLOSE DUPLEX COVER	Duplex cover is open.	Close the duplex cover.
FILE FULL ↕ (Displaying alternately) PRESS ANY KEY	The memory has becomes full while scanning a document in Scan mode.	Turn the machine off, and then, after waiting a few seconds, turn it on again. Decrease the amount of data to be scanned (for example, by decreasing the resolution), and then try scanning again.
FRONT COVER OPEN ↕ (Displaying alternately) CLOSE FRONT COVER	The engine cover is open.	Close the engine cover.

This message...	means...	Do this...
JOB CANCELED	While a document was being scanned from the original glass in Scan mode, more than one minute had passed after the first page of the document was scanned or the data could not be sent. Therefore, the scan job was automatically canceled.	Turn the machine off, and then, after waiting a few seconds, turn it on again. When sending multiple pages, for example, from a book, scan the first page, and then scan the next page within one minute.
NO SUITABLE PAPER LOAD PAPER(XX)	ID card copying is specified, but paper of a size other than A4, Letter or Legal is loaded in the paper tray.	Load A4-, Letter- or Legal-size paper in the paper tray. ID card copying cannot be used with paper of a size other than A4, Letter or Legal.
MEDIA TYPE ERROR ↕ (Displaying alternately) LOAD CORRECT MEDIA XX	TRANSPARENCY was selected as the paper type, but paper other than transparencies is loaded into Tray 1.	Load the correct media type in Tray 1.
	A setting other than TRANSPARENCY was selected as the paper type, but transparencies are loaded into Tray 1.	
MEMORY FULL ↕ (Displaying alternately) PRESS ANY KEY	The machine has received more data than can be processed with its internal memory.	Turn the machine off, and then, after a few seconds, turn it on again. Decrease the amount of data to be printed (for example, by decreasing the resolution), and then try printing again.

This message...	means...	Do this...
NO DUPLEX PAPER	Duplex (Double-Sided) printing is specified, but no paper compatible with duplex (Double-Sided) printing is loaded.	Load paper compatible with duplex (Double-Sided) printing. Only plain and letterhead paper are compatible with duplex (Double-Sided) printing.
NO NETWORK SETTING	The network settings had not been completely specified when the machine was switched to Scan mode.	Before scanning in Scan mode, specify the network settings in the NETWORK SETTING menu.
NOT E-MAIL ADDRESS	An email address was not programmed in the one-touch dial key or speed dial number. (This message appears if a fax number or email address is programmed for group dialing.)	Before sending scan data using one-touch dial keys or speed dial numbers, register an email address with the one-touch dial key or speed dial number.
NOT REGISTERD	An email address was not programmed in the one-touch dial key or speed dial number.	
ORIGINAL DOC. JAM ↕ (Displaying alternately) OPEN DOC. FEED COVER	Media has misfed in the ADF.	Locate and remove the misfeed.
OUTPUT BIN FULL ↕ (Displaying alternately) REMOVE PAPER	The output bin is full of media.	Remove all media from the output bin.

This message...	means...	Do this...
PAPER EMPTY ↕ (Displaying alternately) LOAD PAPER(XX)	Tray X (Tray 1 or Tray 2) ran out of paper.	Load paper into the specified paper tray.
PAPER JAM ↕ (Displaying alternately) OPEN DUPLEX COVER	Media has misfed in the duplex option.	Locate and remove the misfeed.
PAPER JAM ↕ (Displaying alternately) OPEN FRONT COVER	Media has misfed in fuser area or transfer roller area.	Locate and remove the misfeed.
PAPER MISFEED ↕ (Displaying alternately) OPEN FRONT COVER	Media has misfed while being pulled from the tray.	Locate and remove the misfeed.
PAPER SIZE ERROR ↕ (Displaying alternately) RESET PAPER(XX)	The size of the media loaded in the media tray is incorrect.	Load the correct media size in the specified tray.
REMOVE ORIG. IN ADF	ID card copying is specified, but the document is loaded into the ADF.	Remove the document from the ADF. ID card copying can only be used with a document placed on the original glass.
SCANNER UNIT OPEN ↕ (Displaying alternately) CLOSE SCANNER UNIT	Open the scanner unit.	Close the scanner unit.
SERVER MEMORY FULL SMTP Server	The memory of the SMTP server has become full.	The server memory is full. Free up some space on the disk such as by contacting your server administrator.

This message...	means...	Do this...
SET ORIGINAL TO ADF	2in1 or collated copying is specified, but the document is not loaded into the ADF.	Load the document into the ADF. 2in1 and collated copying can only be used with a document loaded into the ADF.
X TONER ↕ (Displaying alternately) EMPTY	Toner cartridge X has become empty. (This message appears if 8 TONER EMPTY STOP on the MACHINE SETTING menu is set to ON(FAX) or OFF.)	Replace the specified toner cartridge.
X TONER ↕ (Displaying alternately) INCORRECT	The X toner cartridge is an unapproved type.	Install a KONICA MINOLTA toner cartridge of the appropriate type (AM, EU, AP or JP), see page 111.
X TONER ↕ (Displaying alternately) LOW	The X toner cartridge is low and should be replaced within 200 pages at 5% coverage of letter/A4 pages.	Prepare the specified color toner cartridge.
X TONER NOT INSTALLED	Toner cartridge X is not installed.	Install the specified toner cartridge.

This message...	means...	Do this...
X TONER EMPTY ↕ (Displaying alternately) CHANGE X TONER	The X toner cartridge is empty. (This message appears if 8 TONER EMPTY STOP on the MACHINE SETTING menu is set to ON.)	Replace the toner cartridge.
TONER LIFE END ↕ (Displaying alternately) CHANGE X TONER	The X toner cartridge is empty.	Replace the toner cartridge.

Service Messages

These messages indicate a more serious fault that can only be corrected by a customer service engineer. If one of these messages appears, turn the machine off, then turn it on again. If the problem persists, contact your local vendor or authorized service provider.

This service message...	means...	Do this...

`*CAUTION!*`
`MACHINE TROUBLE`
(Displaying alternately)
`SERVICE CALL(XX)`
	An error has been detected with the item indicated “XX” in the service message.	Reboot the machine. This often clears the service message, and machine operation can resume.
		If the problem persists, contact Technical Support.

11

Installing Accessories

Introduction

Note

Any damage to the machine caused by the use of accessories not manufactured or supported by KONICA MINOLTA will void your warranty.

This chapter provides information about the following accessories.

Duplex Option	Auto duplexing
Tray 2	Lower feeder unit with 500-sheet tray included

Note

Installing accessories always requires that the machine and accessories are turned off and unplugged during installation.

For details on the available options, refer to printer.konicaminolta.com.

Duplex Option

Duplex (Double-Sided) printing can be performed automatically with the duplex option installed.

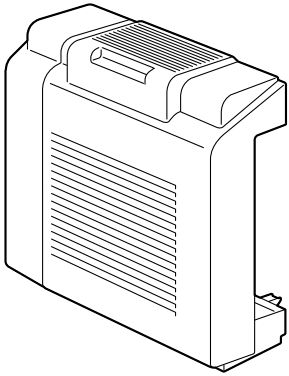

Installing the Duplex Option

1

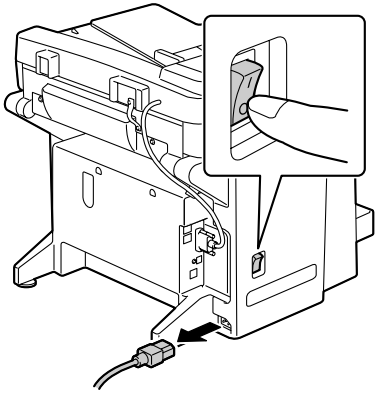

2

Be sure to remove the tape.

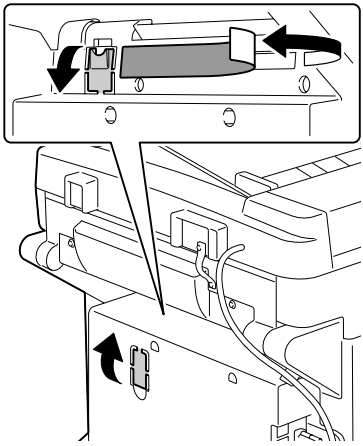

3

Before installing the duplex option, open the duplex cover and check that the knob is positioned vertically. After checking the knob, close the cover.

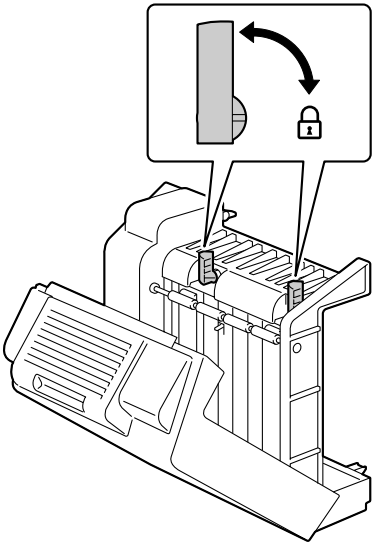

4

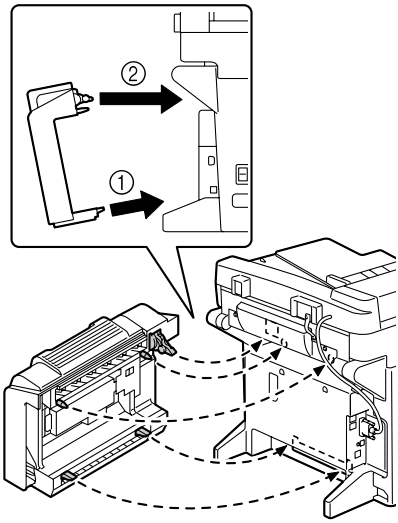

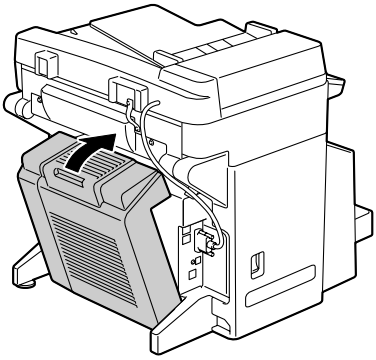

5

Since the duplex option is not yet secured to the machine, hold the duplex option in place when opening its cover.

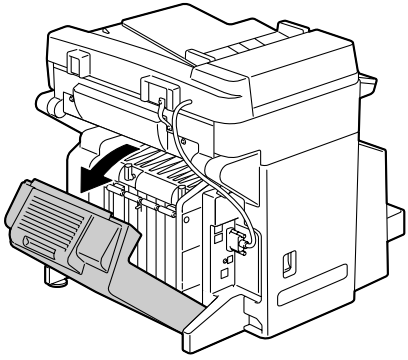

6

Make sure that both knobs are securely locked.

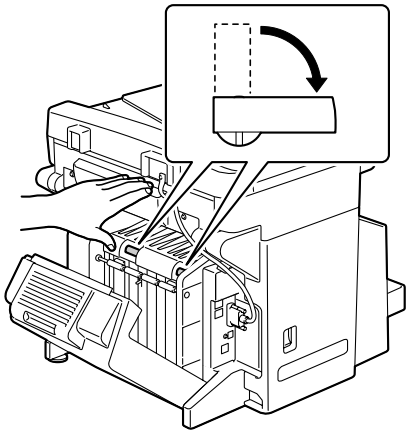

7

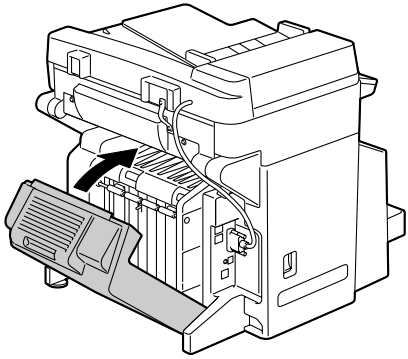

Tray 2

Up to 500 sheets of A4/Letter-size paper can be loaded in Tray 2.

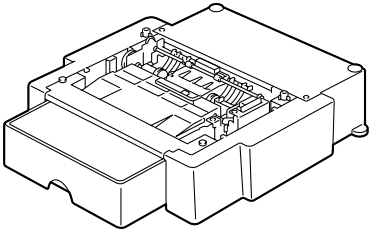

Installing Tray 2

Note

Since consumables are installed in the machine, be sure to keep the machine level when moving it in order to prevent accidental spills.

1

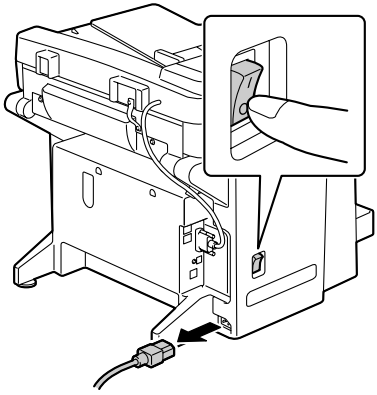

2

Be sure to place Tray 2 on a level surface.

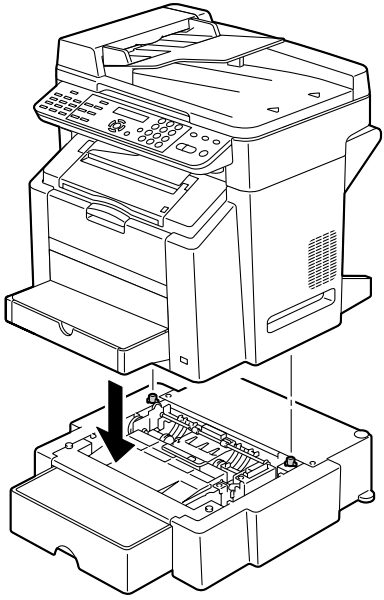

Appendix A

Technical Specifications

Type	Desktop (4-cycle laser color printer-based all-in-one)
Document holder	Stationary
Photoconductor	OPC
Printing system	2 laser diodes and polygon mirror Electro photographic method
Developing system	Mono-component toner developing
Fusing system	Heated roller system
Resolution	2400 dpi × 600 dpi, 1200 dpi × 600 dpi, or 600 dpi × 600 dpi
First print	Simplex ■ Monochrome 13.0 seconds for A4, Letter (plain paper) ■ Full color 22.0 seconds for A4, Letter (plain paper)
First copy	Simplex ■ Monochrome 23.0 seconds for A4, Letter (plain paper) (600 dpi × 300 dpi) ■ Full color 52.0 seconds for A4, Letter (plain paper) (600 dpi × 300 dpi)
Print/Copy speed	Simplex ■ Monochrome 20.0 pages per minute for A4, Letter (plain paper) ■ Full color 5.0 pages per minute for A4, Letter (plain paper)
Warm-up time	120 V: Avg. 45 seconds 220 to 240 V: Avg. 49 seconds

Media sizes	Tray 1 (Multipurpose Cassette) ■ Media width: 92 to 216 mm (3.6 to 8.5") ■ Media length: 148 to 356 mm (5.9 to 14.0") Tray 2 (Optional) A4/Letter
Paper/Media	■ Plain paper (60 to 90 g/m²; 16 to 24 lb bond) ■ Recycled paper (60 to 90 g/m²; 16 to 24 lb bond) ■ Transparency ■ Envelope ■ Thick stock (91 to 163 g/m²) ■ Postcard ■ Letterhead ■ Labels ■ Glossy media
Input capacity	Tray 1 (Multipurpose Cassette) ■ Plain paper: 200 sheets ■ Envelope: 10 envelopes ■ Label/Postcard/Thick Paper/Transparency/ Letterhead/Glossy media: 50 sheets Tray 2 (Optional) Plain paper: 500 sheets
Output capacity	Output bin: 100 sheets (A4, Letter)
Operating temperature	10 to 35°C (50 to 95°F)
Operating humidity	15 to 85%
Power supply	110 to 127 V, 50 to 60 Hz, -10% +6% (120 V, 60 Hz, -10%, +10%, only USA and Canada) 220 to 240 V, 50 to 60 Hz, -10% +10%
Power consumption	110 to 127 V: 1100 W or less 220 to 240 V: 1100 W or less
Amperage	110 to 127 V: 11 A or less 220 to 240 V: 7 A or less

Acoustic Noise	Copying: 53 dB or less 57 dB or less (with ADF) Standby: 39 dB or less
External dimensions	Height: 531 mm (20.9") Width: 528 mm (20.8") Depth: 475 mm (18.7") (with Tray 1 closed)
Weights	■ Machine: Approximately 33 kg (70.5 lb) (excluding the dust cover) ■ Toner cartridge: – Standard in-box cartridge = 0.55 kg (1.21 lb) (Y, M, C) – Standard in-box cartridge = 0.65 kg (1.43 lb) (K) – Replacement cartridge (with toner roller cover)= Standard-capacity: 0.60 kg (1.32 lb) (Y, M, C) – High-capacity: 0.70 kg (1.54 lb) (Y, M, C, K)
Interface	USB 2.0 and USB 1.1 compliant, 10Base-T/ 100Base-TX (IEEE 802.3) Ethernet
Standard memory	128 MB SDRAM (Main Board), 16 MB SDRAM (NIC Board)

Consumable Life Expectancy Chart

User-Replaceable

Item	Average Life Expectancy (in Simplex Pages)
Toner cartridge	At 5% coverage, using A4/Letter plain paper **Starter in-box Cartridge =** 1,500 pages (Y, M, C) (Continuous) 4,500 pages (K) (Continuous) **Replacement Cartridge =** Standard-capacity: 1,500 pages (Y, M, C) (Continuous) High-capacity: 4,500 pages (Y, M, C, K) (Continuous)
Drum cartridge	At 5% coverage, using A4/Letter plain paper **Monochrome:** 45,000 pages (Continuous) **Full color:** 11,250 pages (Continuous)

Service-Replaceable

Item	Average Life Expectancy (in Simplex Pages)
Fuser unit	120,000 pages
Transfer belt unit	**Monochrome:** 125,000 pages (Continuous) **Full color:** 33,700 pages (Continuous)
Transfer roller (included with the transfer belt unit)	120,000 pages

Our Concern for Environmental Protection

As an ENERGY STAR® Partner, we have determined that this machine meets the ENERGY STAR Guidelines for energy efficiency.

What is an ENERGY STAR product?

An ENERGY STAR product has a special feature that allows it to automatically switch to a “low-power mode” after a period of inactivity. An ENERGY STAR product uses energy more efficiently, saves you money on utility bills and helps protect the environment.

Index

Numerics

2in1 88

A

Accessories
- Duplex option 187
- Tray 2 191

B

Basic tab 76

C

Collate 93
Configuration menu 21
Consumables
- Drum cartridge 120
- Toner cartridge 110

Control panel 10
Copy
- 2in1 88
- Collate 93
- Copy density 87
- Duplex 91
- ID card copy 89
- Quality 85
- Select media tray 87
- Zoom ratio 85

Copy density 87

D

Device Options Setting tab 78
Direct print 79
Duplex 91
Duplex option 187

E

Entering, direct 104
Envelope 41

G

Glossy Media 45

I

ID card copy 89
Imageable area 46
Installation precautions 2

L

Labels 42
Layout tab 77
Letterhead 43
Loading document 69
Loading print media 47

M

Machine
- Parts 3

Main screen 14
Maintenance 126
Media
- Clearing misfeeds 144
- Path 144
- Preventing misfeeds 143

Media misfeed
- ADF 157
- Duplex option 156
- Fuser 146
- Transfer roller 146
- Tray1 146
- Tray2 146

Media path 144
Message Window 10
Messages 175
Misfeed problems 159
- Clearing 144
- Media path 144
- Preventing 143

O

One-touch dial key
- Specifying a recipient 104

Original media
- Loading 69

Output bin 64
Overlay tab 77

P

Page margins 46
PageScope Web Connection 167
Phone book
- List 105
- Search 106

Plain paper 39
Postcard 43
Preventing media misfeeds 143
Print media 38
- Imageable area 46
- Loading 47
- Storage 66

Print media type
- Envelope 41
- Glossy Media 45
- Labels 42
- Letterhead 43
- Plain paper 39
- Postcard 43
- Thick stock 40
- Transparency 44

Print quality 168
Print screen 16
Printer driver 75
- Setting 74

Q

Quality 85
Quality tab 77

R

Replace
- Drum cartridge 120
- Toner cartridge 110

S

Scan 96
TWAIN driver 97
Scan mode settings 107
Scan to email
Basic scan to email operation 99
Scanned image size 108
Scanner driver 97
Select media tray 87
Service messages 183
Specifying a recipient 104
Direct entering 104
One-touch dial key 104
Speed dial 105
Specifying recipient 104
List 105
Phone book 105, 106
Search 106
Speed dial
Specifying recipient 105
Storage
Machine 139
Print media 66
System requirements 8

T

Thick stock 40
Transparency 44
Tray 2 191
Troubleshooting 141
Media misfeed 159
Status, error, and service messages 175
TWAIN driver 97

V

Version tab 78

W

Watermark tab 77

Z

Zoom ratio 85