# magicolor® 2530 DL User's Guide

A00V-9566-00A
1800818-001A

## Thank You

Thank you for purchasing a magicolor 2530 DL. You have made an excellent choice. Your magicolor 2530 DL is specially designed for optimal performance in Windows, Macintosh, and other environments.

## Trademarks

KONICA MINOLTA and the KONICA MINOLTA logo are trademarks or registered trademarks of KONICA MINOLTA HOLDINGS, INC.

magicolor is a trademark or registered trademark of KONICA MINOLTA PRINTING SOLUTIONS U.S.A., INC.

## Copyright Notice

Copyright © 2006 KONICA MINOLTA BUSINESS TECHNOLOGIES, INC., Marunouchi Center Building, 1-6-1 Marunouchi, Chiyoda-ku, Tokyo, 100-0005, Japan. All Rights Reserved. This document may not be copied, in whole or part, nor transferred to any other media or language, without written permission of KONICA MINOLTA BUSINESS TECHNOLOGIES, INC.

## Notice

KONICA MINOLTA BUSINESS TECHNOLOGIES, INC. reserves the right to make changes to this guide and to the equipment described herein without notice. Considerable effort has been made to ensure that this guide is free of inaccuracies and omissions. However, KONICA MINOLTA BUSINESS TECHNOLOGIES, INC. makes no warranty of any kind including, but not limited to, any implied warranties of merchantability and fitness for a particular purpose with regard to this guide. KONICA MINOLTA BUSINESS TECHNOLOGIES, INC. assumes no responsibility for, or liability for, errors contained in this guide or for incidental, special, or consequential damages arising out of the furnishing of this guide, or the use of this guide in operating the equipment, or in connection with the performance of the equipment when so operated.

# SOFTWARE LICENSE AGREEMENT

This package contains the following materials provided by Konica Minolta Business Technologies, Inc. (KMBT): software included as part of the printing system, the digitally-encoded machine-readable outline data encoded in the special format and in the encrypted form (“Font Programs”), other software which runs on a computer system for use in conjunction with the Printing Software (“Host Software”), and related explanatory written materials (“Documentation”). The term “Software” shall be used to describe Printing Software, Font Programs and/or Host Software and also include any upgrades, modified versions, additions, and copies of the Software.

The Software is being licensed to you under the terms of this Agreement.

KMBT grants to you a non-exclusive sublicense to use the Software and Documentation, provided that you agree to the following:

1. You may use the Printing Software and accompanying Font Programs for imaging to the licensed output device(s), solely for your own internal business purposes.
2. In addition to the license for Font Programs set forth in Section 1 (“Printing Software”) above, you may use Roman Font Programs to reproduce weights, styles, and versions of letters, numerals, characters and symbols (“Typefaces”) on the display or monitor for your own internal business purposes.
3. You may make one backup copy of the Host Software, provided your backup copy is not installed or used on any computer. Notwithstanding the above restrictions, you may install the Host Software on any number of computers solely for use with one or more printing systems running the Printing Software.
4. You may assign its rights under this Agreement to an assignee of all of Licensee’s right and interest to such Software and Documentation (“Assignee”) provided you transfer to Assignee all copies of such Software and Documentation Assignee agrees to be bound by all of the terms and conditions of this Agreement.
5. You agree not to modify, adapt or translate the Software and Documentation.
6. You agree that you will not attempt to alter, disassemble, decrypt, reverse engineer or decompile the Software.
7. Title to and ownership of the Software and Documentation and any reproductions thereof shall remain with KMBT and its Licensor.
8. Trademarks shall be used in accordance with accepted trademark practice, including identification of the trademark owner’s name. Trademarks can only be used to identify printed output produced by the Software. Such use of any trademark does not give you any rights of ownership in that trademark .
9. You may not rent, lease, sublicense, lend or transfer versions or copies of the Software that the Licensee does not use, or Software contained on any unused media, except as part of the permanent transfer of all Software and Documentation as described above.
10. In no event will KMBT or its licensor be liable to you for any consequential, incidental INDIRECT, PUNITIVE or special damages, including any lost profits or lost saving, even if KMBT has been advised of the possibility of such damages, or for any claim by any third party. KMBT or its licensor disclaims all warranties with regard to the software, express or implied, including, without limitation implied warranties of merchantability, fitness for a particular purpose, title and non-infringement of third party rights. Some states or jurisdictions do not allow the exclusion or limitation of incidental, consequential or special damages, so the above limitations may not apply to you.

11. Notice to Government End Users: The Software is a “commercial item,” as that term is defined at 48 C.F.R.2.101, consisting of “commercial computer software” and “commercial computer software documentation,” as such terms are used in 48 C.F.R. 12.212. Consistent with 48 C.F.R. 12.212 and 48 C.F.R. 227.7202-1 through 227.7202-4, all U.S. Government End Users acquire the Software with only those rights set forth herein.
12. You agree that you will not export the Software in any form in violation of any applicable laws and regulations regarding export control of any countries.

## For EU member states only

This symbol means: **Do not dispose of this product together with your household waste!**

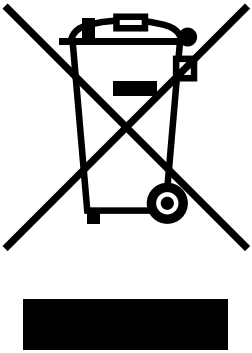

Please contact the Local Authority for appropriate disposal instructions. In the case of a new device being purchased, the used one can also be given to our dealer for appropriate disposal. Recycling of this product will help to conserve natural resources and prevent potential negative consequences for the environment and human health caused by inappropriate waste handling.

# Contents

**1 Introduction ..... 1**
**Getting Acquainted with Your Printer 2**
Space Requirements 2
Printer Parts 3
Front View 3
Rear View 4
Front View with Options 4
Rear View with Options 4

**2 About the Software ..... 5**
**Utilities and Documentation CD-ROM 6**
Drivers 6
Utilities 6
**System Requirements 7**
**Selecting Driver Options/Defaults (For Windows) 8**
**Uninstalling the Printer Driver (For Windows) 9**
**Displaying Printer Driver Settings (For Windows) 9**
Windows XP/Server 2003 9
Windows 2000/Me/98SE/NT 4.0 10

**Using the Printer Driver 10**
Common Buttons 10
OK 10
Cancel 10
Apply 10
Help 10
Easy Set 11
Paper View 11
Printer View 11
Watermark View 11
Quality View 11
Default 11
Basic Tab 12
Layout Tab 12
Overlay Tab 12
Watermark Tab 12
Quality Tab 13
Device Options Setting Tab 13
Version Tab 13

**3 Using the Windows Status Display and Printer Status Monitor Center .....15**
**Working with the Status Display 16**
Introduction 16
Opening the Status Display and Showing the Supplies Status 16
Altering the Size of the Status Display Window 16
Using the Status Display 16
**Recognizing Status Display Alerts 17**
**Recovering from a Status Display Alert 17**
**Closing the Status Display 17**
**Working With the Printer Status Monitor Center 18**
Introduction 18
System Requirements 18
Opening the Printer Status Monitor Center and Showing the Supplies Status 18
Using the Printer Status Monitor Center 19
**Recognizing Printer Status Monitor Center Alerts 20**
**Closing the Printer Status Monitor Center 20**

**4 Printer Control Panel and Configuration Menu .....21**
**About the Control Panel 22**
Control Panel Indicators and Keys 22
Toner Supply Indicators 24
**Configuration Menu Overview 25**
Configuration Menu 25
Special Pages Menu 28
Language Menu 28

Engine Menu 28
Network Menu 31
Consumables Menu 34
Direct Print Menu 35

**5 Direct Print ..... 37**
**Direct Printing 38**
Printing Directly from a Digital Camera 38

**6 Using Media ..... 41**
**Media Specifications 42**
**Media Types 44**
Plain Paper (Recycled Paper) 44
Thick Stock 45
Envelopes 46
Labels 47
Letterhead 48
Postcard 48
Transparencies 49
Glossy 50
What Is the Guaranteed Imageable (Printable) Area? 51
Imageable Area—Envelopes 51
Page Margins 51
**Loading Media 52**
Tray 1 (Multipurpose Tray) 52
Loading Plain Paper 52
Other Media 54
Loading Envelopes 54
Loading Labels/Postcard/Thick Stock/Transparency 58
Tray 2 60
Loading Plain Paper 60
**Duplexing 63**
**Output Tray 64**
**Media Storage 65**

**7 Replacing Consumables ..... 67**
**Replacing Consumables 68**
About Toner Cartridges 68
Replacing a Toner Cartridge 72
Replacing the Drum Cartridge 77

**8 Maintaining the Printer ..... 81**
**Maintaining the Printer 82**
**Cleaning the Printer 84**
Exterior 84
Interior 85

Cleaning the Media Feed Roller and Laser Lens 85
Cleaning the Duplex Option Feed Rollers 88
Cleaning the Media Feed Rollers for Tray 2 89
**Storing the Printer 90**

**9 Troubleshooting .....93**
**Introduction 94**
**Printing the Configuration Page 94**
**Preventing Media Misfeeds 95**
**Understanding the Media Path 96**
**Clearing Media Misfeeds 96**
Media Misfeed Messages and Clearing Procedures 97
Clearing a Media Misfeed in the Printer 97
Clearing a Media Misfeed From Tray 2 101
Clearing a Media Misfeed from the Duplex Option 103
**Solving Problems with Media Misfeeds 105**
**Solving Other Problems 108**
**Solving Problems with Printing Quality 113**
**Status, Error, and Service Messages 119**
Standard Status Messages 119
Error Messages (Warning) 120
Error Messages (Operator Call) 121
Service Messages 124

**10 Installing Accessories .....125**
**Introduction 126**
**Antistatic Protection 126**
**Dual In-Line Memory Module (DIMM) 127**
Installing a DIMM 128
**Duplex Option 130**
Installing the Duplex Option 131
**Tray 2 133**
Installing Tray 2 134
**Dust Cover 135**
Installing the Dust Cover 135
Loading Media in Tray 1 with the Dust Cover Installed 136

**A Appendix .....139**
**Safety Specifications 140**
**Technical Specifications 140**
Printer 140
Consumable Life Expectancy Chart 143
**Our Concern for Environmental Protection 144**
What is an ENERGY STAR product? 144

# 1 Introduction

# Getting Acquainted with Your Printer

## Space Requirements

To ensure easy operation, consumable replacement and maintenance, adhere to the recommended space requirements detailed below.

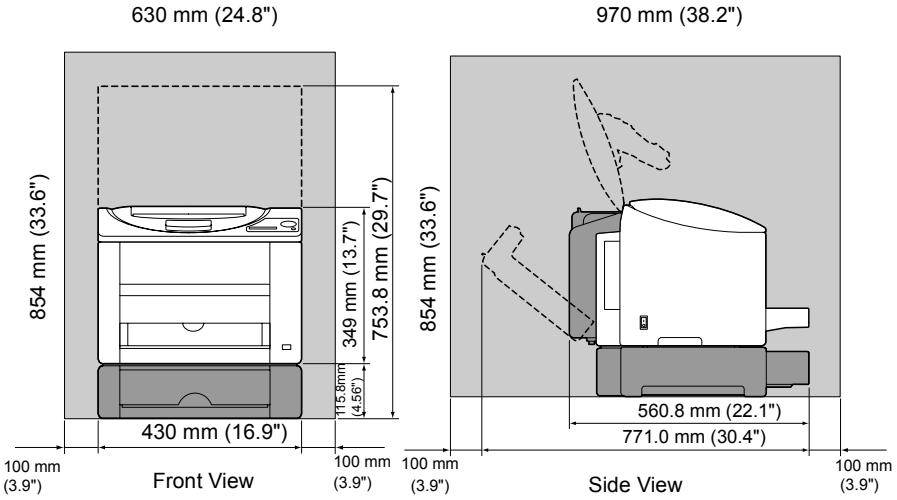


*The options appear shaded in the above illustration.*

*The dust cover is a standard feature in Europe, the Americas and Taiwan, but an optional accessory in other areas.*

## Printer Parts

The following drawings illustrate the parts of your printer referred to throughout this guide, so please take some time to become familiar with them.

### Front View

1—Output tray

2—Control panel

3—Front cover

4—KONICA MINOLTA Digital Camera Direct Print port

5—Tray 1 (Multipurpose tray)

6—Power switch

7—Top cover

8—Transfer belt unit

9—Fuser unit

10—Fuser separator levers

11—Drum cartridge

12—Toner cartridge carousel (containing 4 toner cartridges: C, M, Y and K)

13—Toner cartridge

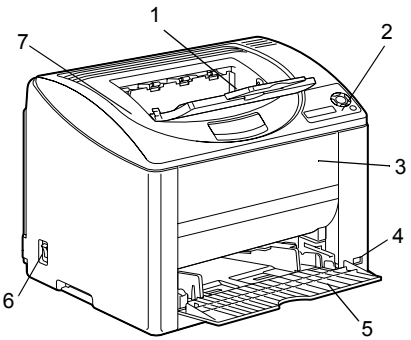


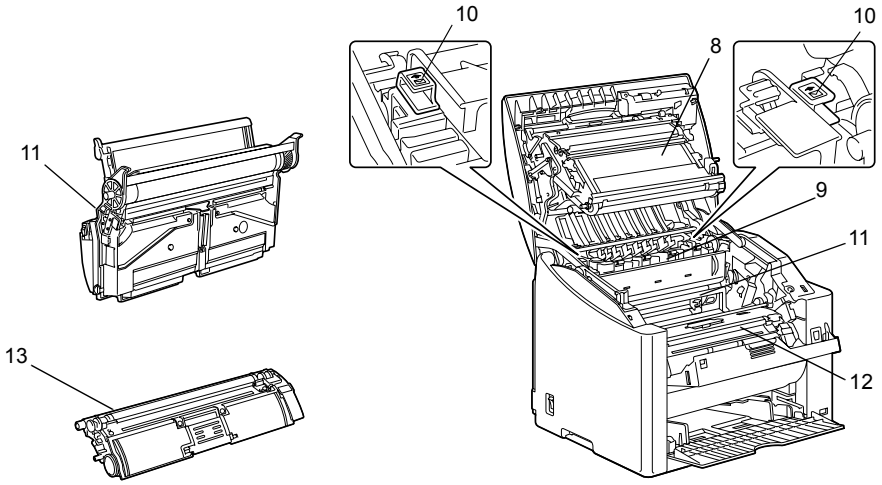

## Rear View

1—USB port

2—10Base-T/100Base-TX (IEEE 802.3) Ethernet Interface port

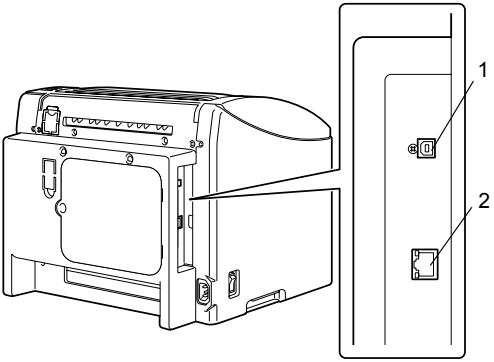


## Front View with Options

1—Dust cover

2—Tray 2

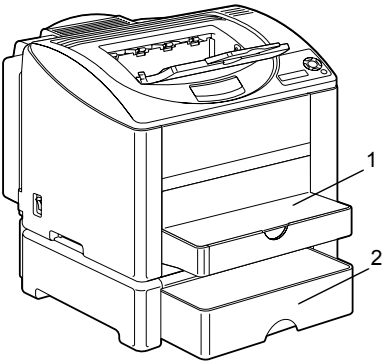


## Rear View with Options

1—Duplex option

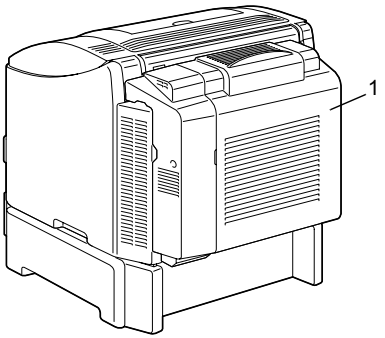

# About the Software

# 2

# *Utilities and Documentation* CD-ROM

## Drivers

| Drivers | Use/Benefit |
|---|---|
| Printer Driver for Windows XP/Server 2003/2000 | These drivers give you access to all of the printer features, including finishing and advanced layout. See also “Displaying Printer Driver Settings (For Windows)” on page 9. |
| Printer Driver for Windows Me/98SE | |
| Printer Driver for Windows NT 4.0 | |
| Printer Driver for Macintosh OS X | |
| Printer Driver for Linux | |

*For details on the Macintosh and Linux printer drivers, refer to the magicolor 2530 DL Reference Guide.*

*For details on the installation of the printer drivers, refer to the magicolor 2530 DL Installation Guide.*

## Utilities

| Utilities | Use/Benefit |
|---|---|
| Status Display (Windows only) | From the Status Display, the current status of this printer, such as its consumables and error information, can be checked.<br>For details, refer to “Working with the Status Display” on page 16. |
| Printer Status Monitor Center (Windows only) | The status of KONICA MINOLTA products on the same network can be checked.<br>For details, refer to “Working With the Printer Status Monitor Center” on page 18. |
| PageScope Web Connection | With the Web browser, the status of printers can be checked, and each setting can be changed.<br>For details, refer to the magicolor 2530 DL Reference Guide. |

# System Requirements

- Personal computer
  - Pentium 2:400 MHz (Pentium 3:500 MHz or higher is recommended.)
  - Power Mac G3 or later (G4 or later is recommended.)
- Operating System
  - Microsoft Windows XP Home Edition/Professional, Windows Server 2003, Windows 2000, Windows Me, Windows 98SE, Windows NT 4.0
  - Mac OS X 10.2 or later
  - Red Hat Linux 8.0 or later, SuSE Linux 8.1 or later
- Free hard disk space
  256 MB or more
- RAM
  128 MB or more than OS recommendation
- CD-ROM/DVD drive
- I/O interface
  - 10Base-T/100Base-TX (IEEE 802.3) Ethernet interface port
  - USB Revision 2.0 and USB Revision 1.1 compliant port

*For details on the Macintosh and Linux printer drivers, refer to the magicolor 2530 DL Reference Guide.*

# Selecting Driver Options/Defaults (For Windows)

Before you start working with your printer, you are advised to verify/change the default driver settings. Also, in case you have options installed, you should “declare” the options in the driver.

1 Choose the driver’s properties as follows:

- (Windows XP/Server 2003)
  From the **start** menu, choose **Printers and Faxes** to display the **Printers and Faxes** directory. Right-click the KONICA MINOLTA magicolor 2530DL printer icon and choose **Printing Preferences**.
- (Windows 2000)
  From the **Start** menu, choose **Settings** and then **Printers** to display the **Printers** directory. Right-click the KONICA MINOLTA magicolor 2530DL printer icon and choose **Printing Preferences**.
- (Windows Me/98SE)
  From the **Start** menu, choose **Settings** and then **Printers** to display the **Printers** directory. Right-click the KONICA MINOLTA magicolor 2530DL printer icon and choose **Properties**. Choose **Printer Properties**.
- (Windows NT 4.0)
  From the **Start** menu, choose **Settings** and then **Printers** to display the **Printers** directory. Right-click the KONICA MINOLTA magicolor 2530DL printer icon and choose **Document Defaults**.

2 If you have installed available options, proceed with the next step. Otherwise, proceed with step 8.

3 Select the **Device Options Setting** tab.

4 Check that the options have been correctly identified.

*Since **Auto configure** is selected as a default with this driver, installed options are automatically identified. If, for some reason, the options are not correctly identified, follow the operations described in steps 5 through 7.*

5 Clear the **Auto configure** check box.

6 Select an option (one at a time) and select **Installed** on the **Settings** drop-down menu list.

*If you accidentally add an uninstalled option, select the option in the **Device Options** list and then select **Not Installed** on the **Settings** drop-down menu list.*

7 Click **Apply**.

*Depending on the version of the operating system, **Apply** may not appear. If this is the case, continue with the next step.*

8 Select the **Basic** tab. Select the default settings for your printer, such as the default media format you use.

9 Click **Apply**.

10 Click **OK** to exit from the Properties dialog box.

# Uninstalling the Printer Driver (For Windows)

This section describes how to uninstall the magicolor 2530 DL printer driver if necessary.

1 From the **Start** (Windows XP/Server 2003 : **start**) menu, choose **Programs** (Windows XP/Server 2003: **All Programs**), **KONICA MINOLTA**, **magicolor 2530DL**, and then **Uninstall**.

2 In the Uninstall window, select the KONICA MINOLTA magicolor 2530DL. Then click **Uninstall**.

3 The magicolor 2530 DL driver will be uninstalled from your computer.

*When using Windows 98SE, restart the computer after uninstalling the printer driver.*

# Displaying Printer Driver Settings (For Windows)

### Windows XP/Server 2003

1 From the **start** menu, choose **Printers and Faxes** to display the **Printers and Faxes** directory.

2 Right-click the KONICA MINOLTA magicolor 2530DL printer icon and choose **Printing Preferences**.

### Windows 2000/Me/98SE/NT 4.0

1 From the **Start** menu, point to **Settings**, and then click **Printers** to display the **Printers** directory.

2 Display the printer driver settings:

- **Windows 2000**—Right-click the KONICA MINOLTA magicolor 2530DL printer icon and choose **Printing Preferences**.
- **Windows Me/98SE**—Right-click the magicolor 2530DL printer icon and choose **Properties**, then select **Printer Properties**.
- **Windows NT 4.0**—Right-click the KONICA MINOLTA magicolor 2530DL printer icon and choose **Document Defaults**.

# Using the Printer Driver

## Common Buttons

The buttons described below appear on each tab.

### OK

Click to exit the Printing Preferences dialog box, saving any changes made.

### Cancel

Click to exit the Printing Preferences dialog box without saving any changes made.

### Apply

Click to save all changes without exiting the Printing Preferences dialog box.

*Depending on the version of the operating system, **Apply** may not appear.*

### Help

Click to view the help.

## Easy Set

Click **Save** to save the current settings. Specify a **Name** and **Comment** to access the settings for use again later.

- **Name:** Type in the name of the settings to be saved.
- **Comment:** Add a simple comment to the settings to be saved.

Afterward, the saved settings can be selected from the drop-down list. To change the registered settings, click **Edit**.

Select **Default** from the drop-down list to reset the functions in all tabs to their default values.

## Paper View

Click the button to display a sample of the page layout in the figure area.

*This button does not appear on the **Watermark**, **Quality**, and **Version** tabs.*

## Printer View

Click the button to display an image of the printer in the figure area.

*This button does not appear on the **Version** tab.*

## Watermark View

Click this button to display a preview of the watermark.

*This button appears only when the **Watermark** tab is selected.*

## Quality View

Click this button to display a sample of the settings selected in the **Quality** tab.

*This button appears only when the **Quality** tab is selected.*

## Default

Click this button to reset the settings to their defaults.

*This button does not appear on the **Version** tab.*

*When this button is clicked, the settings in the displayed dialog box are reset to their defaults. The settings on other tabs are not changed.*

## Basic Tab

The Basic Tab allows you to

- Specify the orientation of the media
- Specify the size of the original document
- Select the output media size
- Zoom (expand/reduce) documents
- Specify the paper source
- Specify the type of media
- Specify the number of copies
- Turn on/off job collation

## Layout Tab

The Layout Tab allows you to

- Print several pages of a document on the same page (N-up printing)
- Rotate the print image 180 degrees
- Specify duplex printing
- Specify booklet printing
- Specify image shift settings

## Overlay Tab

*Be sure to use overlays with print jobs with a media size and orientation that matches the overlay form.*
*In addition, if settings have been specified for "N-up" or "Booklet" in the printer driver, the overlay form cannot be adjusted to match the specified settings.*

The Overlay Tab allows you to

- Select the form to use
- Add, edit or delete overlay files
- Print the form on all pages or only the first page

## Watermark Tab

The Watermark Tab allows you to

- Select the watermark to be used
- Add, edit or delete watermarks

- Print the watermark on the background
- Lighten the density of the watermark
- Print the watermark on only the first page

## Quality Tab

The Quality Tab allows you to

- Specify whether to print in color or black and white
- Control the darkness of an image (Brightness)
- Adjust the contrast (Contrast)
- Adjust the saturation of printed image (Saturation)
- Specify the color matching for printing documents
- Specify the resolution for the printout

## Device Options Setting Tab

The Device Options Setting tab allows you to

- Automatically identify installed options
- Activate Tray 2 and/or the duplex option
- Enter the user name that is sent with the print job(s)

## Version Tab

- The Version Tab allows you to view information about the printer driver.

# 3

# *Using the Windows Status Display and Printer Status Monitor Center*

# Working with the Status Display

## Introduction

The Status Display shows information about the current status of the printer.

*The Status Display requires that Enable Bidirectional Support be selected in Printing Properties.*

## Opening the Status Display and Showing the Supplies Status

Use one of the following steps to open the Status Display:

- **Windows XP/Server 2003**—From the **start** menu, choose **All Programs**, **KONICA MINOLTA**, **magicolor 2530DL**, and then **Status**.
- **Windows 2000/Me/98SE/NT 4.0**—From the **Start** menu, choose **Programs**, **KONICA MINOLTA**, **magicolor 2530DL**, and then **Status**.

## Altering the Size of the Status Display Window

- From the **Display** menu, choose **Status (Reduce)** to decrease the size of the window.
- From the **Display** menu, choose **Status (Expand)** to increase the size of the window.

## Using the Status Display

- When the background of the printer graphic is green, the printer is in standby mode or a job is printing normally.
- When the background of the printer graphic is red or yellow, there is an error and the job has been interrupted. The status of the printer and the error message are shown in the dialog boxes on the left.

The function areas include:

- **Printer Status**—Displays text messages that describe the current operational status of the printer.
- **How to Recover**—Provides you with explanations of what you need to do in order to correct problems and recover from error conditions.
- **Warning Status**—Displays text messages that alert you of conditions such as low toner.
- **Printer Status Figure**—Shows a graphic representation of the printer and indicates where the problem is.

- **Printing Status**—Displays the status of the current print job.
- **Select Popup Message**—Allows you to choose which message(s) you want to bring to the foreground when that particular condition occurs with the printer.
- **Printer Information**—Allows you to check various information such as the number of prints.
- **Supplies Status**—Displays the usage status (approximate percentage remaining) of each toner cartridge.

# Recognizing Status Display Alerts

When the Status Display detects a printing problem, the icon on the Windows task bar changes from green (normal) to yellow (warning) or red (error), depending on the severity of the printer problem.

# Recovering from a Status Display Alert

When the Status Display notifies you of a printing problem, double-click its icon on the Windows task bar to open the Status Display. The Status Display identifies what type of error has occurred.

# Closing the Status Display

To close the Status Display from the **File** menu, choose **Exit**.

*If you click the **X** button in the upper-right corner of the Status Display window to close the window, the Status Display remains available at the bottom right of the taskbar. Double-click the icon to open the Status Display window again.*

# Working With the Printer Status Monitor Center

## Introduction

Printer Status Monitor Center is an application that shows the status of multiple printing devices connected to the host through local ports (USB) or network ports. Printer Status Monitor Center locates network printing devices by using the Service Location Protocol (SLP), and only supports printing devices responding to KONICA MINOLTA–specific SLP and PJL queries such as the magicolor 2300 DL, the magicolor 2430 DL, the magicolor 5430 DL, the magicolor 5440 DL and the magicolor 2530 DL.

*If a KONICA MINOLTA product is not compatible with both SLP and KONICA MINOLTA–specific PJL, Printer Status Monitor Center cannot be used.*

*The Printer Status Monitor Center requires that Enable Bidirectional Support be selected in Printing Properties.*

## System Requirements

- Operating System
  Windows XP/Server 2003/2000/Me/98SE/NT 4.0
- Printer Ports Supported by Printer Status Monitor Center
  - Ethernet port
  - USB port

## Opening the Printer Status Monitor Center and Showing the Supplies Status

Follow the appropriate operation described below to open the Printer Status Monitor Center.

- **Windows XP/Server 2003**—From the **start** menu, choose **All Programs**, **KONICA MINOLTA**, **magicolor 2530DL**, and then **Printer Status Monitor Center**.
- **Windows 2000/Me/98SE/NT 4.0**—From the **Start** menu, choose **Programs**, **KONICA MINOLTA**, **magicolor 2530DL**, and then **Printer Status Monitor Center**.

- **Printer Name**—Displays the model name of the local printer or printer on the network together with a printer icon. The printer icon changes color according to the connection and printer status. A red icon indicates an error, a yellow icon indicates a warning, and a green icon indicates normal operation.
  Depending on the setting in the Options dialog box, Status Display or PageScope Web Connection appears when you double-click the printer name.

*If the name of the printer cannot be detected, "Unknown" appears next to the Printer name.*

*If the selected printer is incompatible with Status Display or PageScope Web Connection, it will not appear when you double-click the printer name.*

*If the device is connected to the USB port or if "Unable to Connect" appears under Status, Status Display or PageScope Web Connection does not appear, even when you double-click the printer name.*

- **Port**—Displays the name of the port where the printer is connected.
  For a local printer, the type (USB) is displayed.
  For a network printer, the IP address is displayed.
- **Status**—Displays the printer status. The same information for Printer Status in the Status Display is displayed.
- **Supply Status: C,M,Y,K %Remaining**—Displays (as a percentage) the approximate amount of toner remaining in the cartridges. The listed values are, from the left: C (cyan), M (magenta), Y (yellow) and K (black).

*Click the heading of each column to switch the order between descending and ascending.*

**Action Menu**

- **Update Printers**—Searches again for the printers on the network.
- **Network Printers**—Allows the IP address of network printers to be added or removed.

■ **Options**

| | |
|---|---|
| Status Monitor Application for Network Printers | Specify whether Status Display or PageScope Web Connection appears when the name of the printer in the screen is double-clicked. The default setting is Status Display. This setting only applies to network printers. |
| Timeout | Two timeout intervals can be specified.<br>■ Printer Detection Timeout<br>■ Printer Status Query Timeout |

# Recognizing Printer Status Monitor Center Alerts

If a red or yellow icon appears, open Status Display or PageScope Web Connection, and then check the detailed information. For details on Status Display, refer to “Working with the Status Display” on page 16. For details on PageScope Web Connection, refer to the magicolor 2530 DL Reference Guide.

# Closing the Printer Status Monitor Center

To close Printer Status Monitor Center, choose **Exit** from the **Action** menu, or click the **X** button in upper-right corner of the Printer Status Monitor Center window.

# 4

# *Printer Control Panel and Configuration Menu*

# About the Control Panel

The control panel, located on the top of the printer, allows you to direct the printer's operation. In addition, it displays the current status of the printer, including any condition that needs your attention.

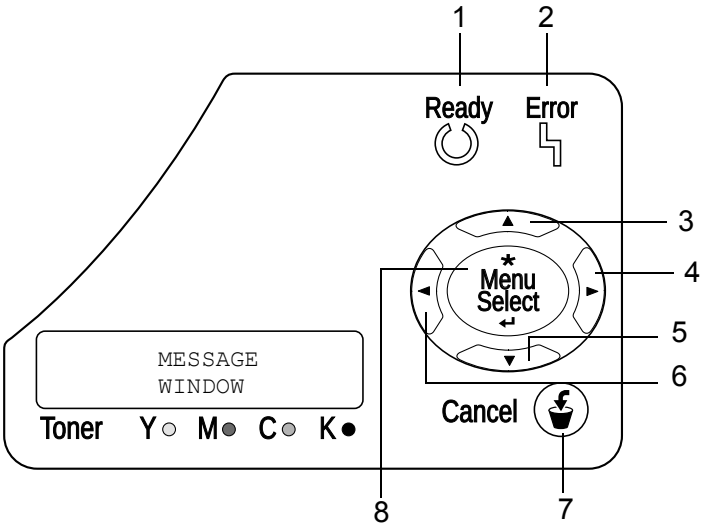


## Control Panel Indicators and Keys

| No. | Indicator | Off | On |
|---|---|---|---|
| 1 | Ready | The printer is not ready to accept data. | The printer is ready to accept data. |
| 2 | Error | No problem. | The printer requires operator attention (usually accompanied by a status message in the message window.) |

| No. | Key | Function |
|---|---|---|
| 3 | | ■ Moves up in the menu structure<br>■ Within a menu choice that is changeable character by character, scrolls upward through the available characters |
| 4 | | ■ Moves right in the menu structure<br>■ Moves right through the available menu choices |
| 5 | | ■ Moves down in the menu structure.<br>■ Within a menu choice that is changeable character by character, scrolls downward through the available characters |
| 6 | | ■ Moves left in the menu structure<br>■ Moves left through the available menu choices |
| 7 | | ■ Cancels the currently displayed menu or menu choice<br>■ Allows you to cancel one or all print jobs that are currently being printed or processed:<br>1. Press the **Cancel** key.<br>2. Press the **Right** or **Left** keys to select either `JOB CANCEL/CURRENT JOB` or `JOB CANCEL/ALL JOBS`.<br>3. Press the **Select** key.<br>The print job(s) is cancelled. |
| 8 | | ■ Enters the menu system<br>■ Moves down in the menu structure<br>■ Selects the displayed menu choice |

## Toner Supply Indicators

The indicators shown below will appear, indicating the amount of toner that remains in the yellow (Y), magenta (M), cyan (C), and black (K) toner cartridges.

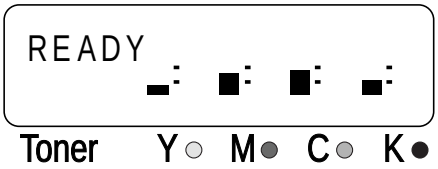

# Configuration Menu Overview

The magicolor 2530 DL configuration menu accessible from the control panel is structured as shown below.

## Configuration Menu

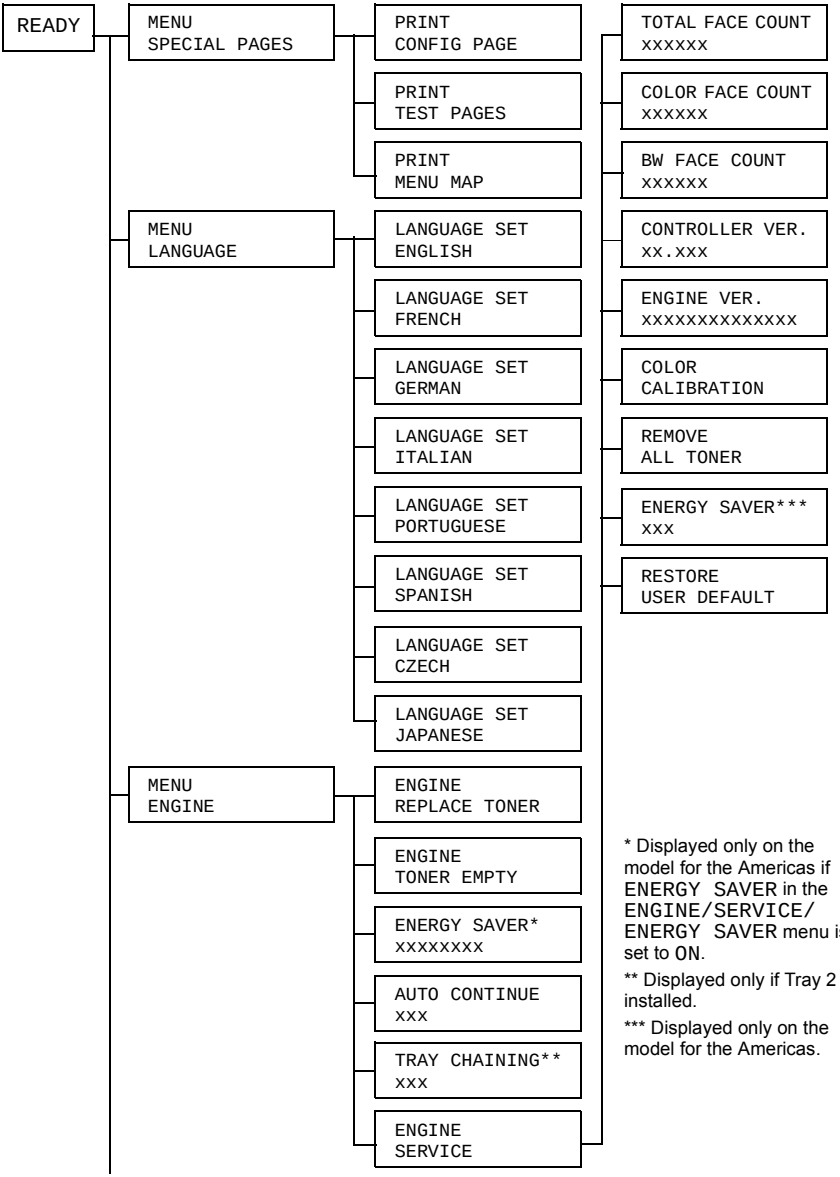


* Displayed only on the model for the Americas if ENERGY SAVER in the ENGINE/SERVICE/ ENERGY SAVER menu is set to ON.

** Displayed only if Tray 2 is installed.

*** Displayed only on the model for the Americas.

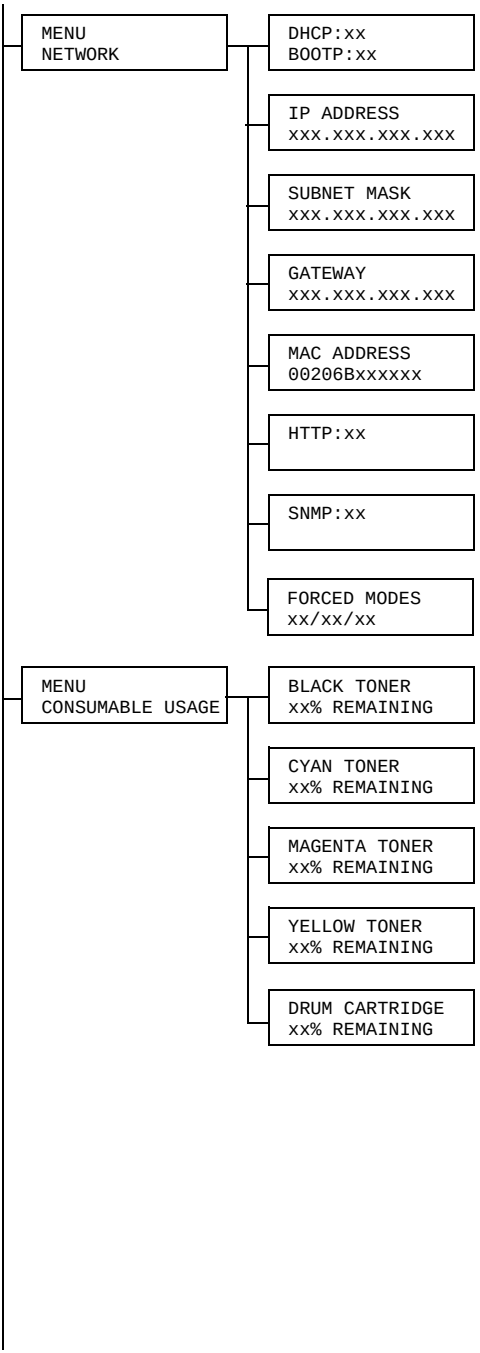
MENU
NETWORK
DHCP:xx
BOOTP:xx
IP ADDRESS
xxx.xxx.xxx.xxx
SUBNET MASK
xxx.xxx.xxx.xxx
GATEWAY
xxx.xxx.xxx.xxx
MAC ADDRESS
00206Bxxxxxx
HTTP:xx
SNMP:xx
FORCED MODES
xx/xx/xx
MENU
CONSUMABLE USAGE
BLACK TONER
xx% REMAINING
CYAN TONER
xx% REMAINING
MAGENTA TONER
xx% REMAINING
YELLOW TONER
xx% REMAINING
DRUM CARTRIDGE
xx% REMAINING

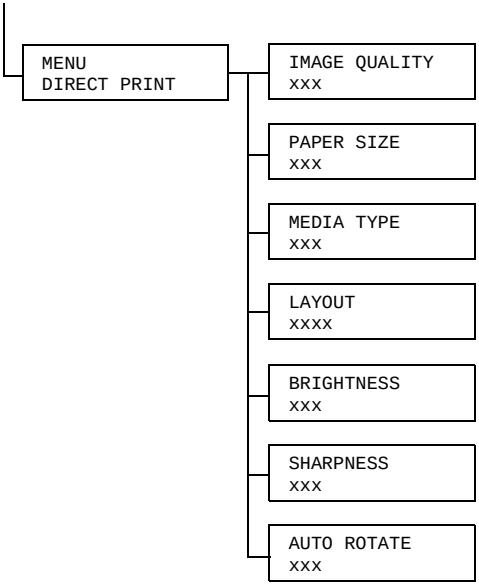
MENU
DIRECT PRINT
IMAGE QUALITY
xxx
PAPER SIZE
xxx
MEDIA TYPE
xxx
LAYOUT
xxxx
BRIGHTNESS
xxx
SHARPNESS
xxx
AUTO ROTATE
xxx

## Special Pages Menu

| | |
|---|---|
| **PRINT CONFIG PAGE** | Print the configuration page. |
| **PRINT TEST PAGES** | Print the test page. |
| **PRINT MENU MAP** | Print the menu map. |

## Language Menu

| | |
|---|---|
| **ENGLISH/FRENCH/ GERMAN/ITALIAN/ PORTUGUESE/ SPANISH/CZECH/ JAPANESE** | The display language of the message window can be changed to the required language.<br>The default setting is English. |

## Engine Menu

*All factory default values are shown in bold.*

| | | |
|---|---|---|
| **REPLACE TONER** | Settings | BLACK / YELLOW / MAGENTA / CYAN / ALL |
| | Select the color for the toner cartridge to be replaced.<br>When the color for the toner cartridge to be replaced is selected, the carousel rotates to the toner cartridge for the selected color, so that it can be replaced.<br>If ALL was selected, first the cyan (C) toner cartridge is rotated, so that it can be replaced. After it is replaced and all covers are closed, the black (K) toner cartridge is rotated, so that it can be replaced. In the same way, the yellow (Y) and magenta (M) toner cartridges are rotated one by one, so that they can be replaced.<br>For details on replacing the toner cartridge, refer to “Replacing a Toner Cartridge” on page 72. | |

| | | |
|---|---|---|
| **TONER EMPTY** | Settings | **STOP** / CONTINUE |
| | When set to CONTINUE, printing continues even if the toner cartridge is empty.<br>When set to STOP, printing stops when the toner cartridge is empty. | |
| **ENERGY SAVER** | Settings | 15 MINUTES / **30 MINUTES** / 60 MINUTES/ 120 MINUTES |
| | Sets the length of time until the printer enters Energy Saver mode after it no longer receives print jobs or is not operating.<br>120 MINUTES is displayed only on the model for the Americas.<br>The Energy Saver mode is automatically cancelled when any of the following occurs:<br>■ The printer is restarted.<br>■ A print job is received.<br>■ Any key on the control panel is pressed.<br>■ The top cover is opened, then closed.<br>This menu is displayed only on the model for the Americas when ENGINE/SERVICE/ ENERGY SAVER is set to ON. | |
| **AUTO CONTINUE** | Settings | **ON** / OFF |
| | When set to ON, the printer continues printing if the correct size media is not loaded in the specified tray.<br>When set to OFF, the printer stops and displays a message indicating that media should be loaded into the specified tray if the specified tray runs out of media. | |

| | | | |
|---|---|---|---|
| **TRAY CHAINING** | | Settings | **ON** / OFF |
| | | When set to ON, the printer automatically switches to a different tray containing media of the same size and type, if the specified tray runs out of media.<br>When set to OFF, the printer stops and displays a message indicating that media should be loaded into the specified tray if the specified tray runs out of media. | |
| **ENGINE SERVICE** | Use this submenu to view information related to the engine. | | |
| | **TOTAL FACE COUNT** | The number of page faces that have been printed to date. | |
| | **COLOR FACE COUNT** | The number of color page faces that have been printed to date. | |
| | **BW FACE COUNT** | The number of monochrome page faces that have been printed to date. | |
| | **CONTROL-LER VER.** | The current controller firmware version. | |
| | **ENGINE VER.** | The printer engine firmware version. | |
| | **COLOR CALIBRA-TION** | Performs color calibrations in order to adjust the color shift. | |
| | **REMOVE ALL TONER** | All toner cartridges can be removed.<br>First, the cyan (C) toner cartridge is rotated, so that it can be removed. After it is removed and all covers are closed, the black (K) toner cartridge is rotated, so that it can be removed. In the same way, the yellow (Y) and magenta (M) toner cartridges are rotated one by one, so that they can be removed. | |
| | **ENERGY SAVER** | Settings | **ON** / OFF |
| | | When set to ON, Energy Saver is enabled.<br>When set to OFF, Energy Saver is disabled and the ENGINE/ENERGY SAVER menu is not displayed.<br>This menu is displayed only on the model for the Americas. | |

| | | |
|---|---|---|
| **ENGINE SERVICE** | **RESTORE USER DEFAULT** | Resets the ENERGY SAVER, AUTO CONTINUE and TRAY CHAINING menus to the factory defaults. In addition, the PageScope Web Connection administrator password is reset to the default password. For details of the PageScope Web Connection administrator password, refer to the magicolor 2530 DL Reference Guide. |

## Network Menu

If the printer is connected to a network, the following settings should be specified. For details about each setting, contact your network administrator.

*All factory default values are shown in bold.*

| | | |
|---|---|---|
| **DHCP** | Settings | **DHCP SET:ON**<br>**BOOTP SET:OFF** |
| | | DHCP SET:OFF<br>BOOTP SET:ON |
| | | DHCP SET:OFF<br>BOOTP SET:OFF |
| | If there is a DHCP server on the network, specify whether the IP address is automatically assigned by the DHCP server and other network information is loaded. | |
| **BOOTP** | Specifies whether the IP address is automatically assigned by BOOTP and other network information is loaded. | |
| **IP ADDRESS** | Setting | **192.168.1.2** |
| | Sets the IP address of this printer on the network. Use the Up, Down, Left, and Right keys to enter the value.<br>When manually setting the IP address, first set DHCP and BOOTP to OFF. | |
| **SUBNET MASK** | Setting | **255.255.255.0** |
| | Sets the subnet mask value of the network. Use the Up, Down, Left, and Right keys to enter the value. When manually setting the Subnet Mask, first set DHCP and BOOTP to OFF. | |

| | | |
|---|---|---|
| **GATEWAY** | Setting | **192.168.1.1** |
| | If a router is used on the network, enter the IP address of the router. Use the Up, Down, Left, and Right keys to enter the value. When manually setting the Gateway, first set DHCP and BOOTP to OFF. | |
| **MAC ADDRESS** | Displays the Ethernet hardware address for this printer. (It cannot be changed.) | |
| **HTTP** | Settings | **ON** / OFF |
| | HTTP can be set to ON or OFF. ON enables the Internal Web Page inside the printer, OFF disables it. | |
| **SNMP** | Settings | **ON** / OFF |
| | SNMP is a scalable, distributed management suited for managing small to large size networks. SNMP can be set to ON or OFF. | |

| | | |
|---|---|---|
| **FORCED MODES** | Settings | **AUTO/AUTO/ON** / AUTO/FULL/ON / AUTO/HALF/ON / 100M/AUTO/ON / 100M/FULL/ON / 100M/FULL/OFF / 100M/HALF/ON / 100M/HALF/OFF / 10M/AUTO/ON / 10M/FULL/ON / 10M/FULL/OFF / 10M/HALF/ON / 10M/HALF/OFF |
| | Some network hubs will not communicate with printers that use a fixed network speed and structure. In such cases, use the new NETWORK/FORCED MODES menu to configure the printer for the appropriate hub settings and enable communication.<br>■ The first value indicates the network transmission speed (SPEED). Select from a 10Base-T connection (10M), 100Base-TX connection (100M), or automatic recognition (AUTO). If AUTO is selected, the transmission speed is set depending on the negotiation; therefore, there is no setting where negotiation is turned off.<br>■ The second value indicates the communication method for bi-directional communication (DUP). Select whether data is sent and received in both directions simultaneously (FULL) or in one direction at a time (HALF), or select automatic recognition (AUTO). If AUTO is selected, the transmission speed is set depending on the negotiation; therefore, there is no setting where negotiation is turned off.<br>■ The third value indicates the negotiation (NEG.) setting (mutually sends and receives information such as the transmission speed and determines the transmission setting). When set to ON, negotiation is performed. When set to OFF, negotiation is not performed. | |

## Consumables Menu

| | |
|---|---|
| **BLACK TONER** | The approximate percentage of toner remaining in the black toner cartridge. |
| **CYAN TONER** | The approximate percentage of toner remaining in the cyan toner cartridge. |
| **YELLOW TONER** | The approximate percentage of toner remaining in the yellow toner cartridge. |
| **MAGENTA TONER** | The approximate percentage of toner remaining in the magenta toner cartridge. |
| **DRUM CAR-TRIDGE** | The remaining life for the drum cartridge. |

## Direct Print Menu

These settings are overridden by any settings configured within the digital camera.
For details on direct printing, refer to “Direct Printing” on page 38.

*All factory default values are shown in bold.*

| | | |
|---|---|---|
| **IMAGE QUALITY** | Settings | **DRAFT** / NORMAL / FINE |
| | Specifies the resolution of the printed image. There are three settings: DRAFT (600 × 600 dpi), NORMAL (1200 × 600 dpi), and FINE (2400 × 600 dpi).<br>If additional memory of 128 MB or more is not installed, only DRAFT (600 × 600 dpi) is available. | |
| **PAPER SIZE** | Settings | **LETTER** / **A4** / A5 / STATEMENT / J-POSTCARD/ PHOTO SIZE 4x6″ / PHOTO SIZE 10x15 / LTR 2-UP 4x6 / A4 4-UP L SIZE / A4 2-UP 10x15 |
| | Specifies the media size on which the image will be printed.<br>LETTER is the default setting for the Americas, and A4 is the default setting for all other regions. | |
| **MEDIA TYPE** | Settings | **PLAIN PAPER** / THICK STOCK / GLOSSY / POSTCARD / LABELS |
| | Specifies the media type on which the image will be printed. | |
| **LAYOUT** | Settings | **1-UP** / 2-UP / 3-UP / 4-UP / 6-UP / 8-UP |
| | Specifies the number of images to be printed on a single sheet of paper.<br>When set to 1-UP, only one image will be printed on a single sheet of paper. | |
| **BRIGHT-NESS** | Settings | **OFF** / ON |
| | Changes the density of colors.<br>When set to ON, images are printed even brighter. | |
| **SHARP-NESS** | Settings | **OFF** / ON |
| | Changes the vividness of intermediate colors.<br>When set to ON, intermediate colors in images are printed more vividly. | |

| | | |
|---|---|---|
| **AUTO ROTATE** | Settings | **OFF** / ON |
| | Prints with the image rotated so that it fits the size of the paper.<br>When set to ON, the image is rotated 90 degrees clockwise before it is printed.<br>These settings are available only when LAYOUT is set to 1-UP or 4-UP. | |

# 5 Direct Print

# Direct Printing

If a digital camera with PictBridge (1.0 or later) is connected to the printer through a USB connection, images stored on the digital camera can be printed directly from the printer.

*FINE (2400 x 600 dpi) is available if total printer memory installed is 128 MB or more.*

*The following features are not supported with Direct Printing.*

- *Cropping print*
- *Fixed size print*
- *Borderless*
- *DPOF print*

## Printing Directly from a Digital Camera

1 From the printer's Direct Print menu, specify settings for Image Quality, Paper Size, Media Type, Layout, Brightness, Sharpness and Auto Rotate.

*The Media Type setting can only be specified from the printer's Direct Print menu.*
*Media Type cannot be selected from the digital camera.*

*If these settings, except for Media Type, can be specified from the digital camera, they do not need to be specified from the control panel. These settings are overridden by settings configured within the digital camera.*
*For details on control panel settings, refer to "Direct Print Menu" on page 35.*

2 Connect the USB cable to the digital camera and to the direct print port.

*A USB cable is not included with the printer and must be purchased separately, if not supplied with your digital camera.*

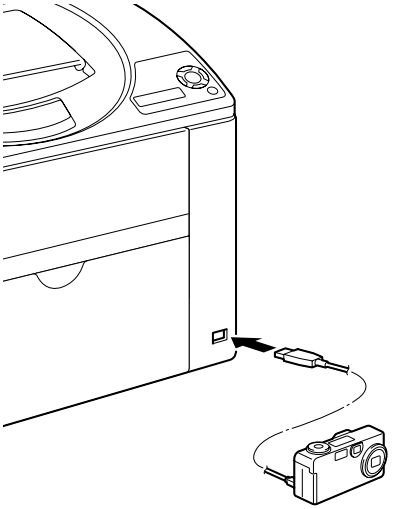

3 From the digital camera, specify the image that you wish to print and the desired number of copies.

4 Start printing from the digital camera.

# 6

# *Using Media*

# Media Specifications

## What types and sizes of media can I load?

| Media | Media Size | | Tray* | Duplex |
|---|---|---|---|---|
| | Inch | Millimeter | | |
| A4 | 8.2 x 11.7 | 210.0 x 297.0 | 1/2 | Yes |
| A5 | 5.9 x 8.3 | 148.0 x 210.0 | 1 | No |
| B5 (JIS) | 7.2 x 10.1 | 182.0 x 257.0 | 1 | No |
| B5 (ISO) | 6.9 x 9.8 | 176.0 x 250.0 | 1 | No |
| Executive | 7.25 x 10.5 | 184.0 x 267.0 | 1 | No |
| Folio | 8.3 x 13.0 | 210.0 x 330.0 | 1 | Yes |
| Foolscap | 8.0 x 13.0 | 203.2 x 330.2 | 1 | Yes |
| Kai 16 | 7.3 x 10.2 | 185.0 x 260.0 | 1 | No |
| Kai 32 | 5.1 x 7.3 | 130.0 x 185.0 | 1 | No |
| 16K | 7.7 x 10.6 | 195.0 x 270.0 | 1 | No |
| Legal | 8.5 x 14.0 | 215.9 x 355.6 | 1 | Yes |
| Government Legal | 8.5 x 13.0 | 216.0 x 330.0 | 1 | Yes |
| Letter | 8.5 x 11.0 | 215.9 x 279.4 | 1/2 | Yes |
| Letter Plus | 8.5 x 12.69 | 215.9 x 322.3 | 1 | Yes |
| Government Letter | 8.0 x 10.5 | 203.2 x 266.7 | 1 | No |
| Statement | 5.5 x 8.5 | 140.0 x 216.0 | 1 | No |
| UK Quarto | 8.0 x 10.0 | 203.2 x 254.0 | 1 | No |
| Custom, Minimum | 3.6 x 7.8 | 92.0 x 198.0 | 1 | No |
| Custom, Maximum | 8.5 x 14.0 | 216.0 x 356.0 | 1 | No |
| J-Postcard | 3.9 x 5.8 | 100.0 x 148.0 | 1 | No |
| Double Postcard | 5.8 x 7.9 | 148.0 x 200.0 | 1 | No |
| Envelope C5 | 6.4 x 9.0 | 162.0 x 229.0 | 1 | No |
| Envelope C6 | 4.5 x 6.4 | 114.0 x 162.0 | 1 | No |
| Envelope Com10 | 4.125 x 9.5 | 104.7 x 241.3 | 1 | No |
| Envelope DL | 4.3 x 8.7 | 110.0 x 220.0 | 1 | No |
| Envelope Monarch | 3.875 x 7.5 | 98.4 x 190.5 | 1 | No |
| Envelope Chou #3 | 4.7 x 9.2 | 120.0 x 235.0 | 1 | No |
| Envelope Chou #4 | 3.5 x 8.1 | 90.0 x 205.0 | 1 | No |
| Envelope You #4 | 4.1 x 9.3 | 105.0 x 235.0 | 1 | No |
| Photo size 4x6 | 4.0 x 6.0 | 102.0 x 152.0 | 1 | No |
| Photo size 10x15 | 4.0 x 6.0 | 102.0 x 152.0 | 1 | No |

| Media | Media Size | | Tray* | Duplex |
|---|---|---|---|---|
| | Inch | Millimeter | | |
| Thick Stock, Glossy—Only supported for letter, A4, or smaller media. | | | | |
| Custom, Minimum | 3.6 x 5.9 | 92.0 x 148.0 | 1 | No |
| Custom, Maximum | 8.5 x 11.7 | 216.0 x 297.0 | 1 | No |
| **Notes:** *Tray 1 = Multipurpose<br>Tray 2 = Plain paper only | | | | |

*For custom sizes, use the printer driver to specify the settings within the ranges shown in the above table.*

# Media Types

Before purchasing a large quantity of special media, do a trial print with the same media and check the print quality.

Keep media on a flat, level surface in its original wrapper until it is time to load it. For a list of approved media, refer to printer.konicaminolta.com.

## Plain Paper (Recycled Paper)

| | | |
|---|---|---|
| **Capacity** | **Tray 1** | Up to 200 sheets, depending on the paper weight |
| | **Tray 2** | Up to 500 sheets, depending on the paper weight |
| **Orientation** | Face up | |
| **Driver Media Type** | Plain paper (Recycled paper) | |
| **Weight** | 60 to 90 g/m² (16 to 24 lb bond) | |
| **Duplexing** | See page 42 for supported sizes. | |

**Use plain paper that is**

- Suitable for plain paper laser printers, such as standard or recycled office paper.

### Note

**Do not use the media types listed below. These could cause poor print quality, media misfeeds, or damage to the printer.**

**DO NOT use media that is**

- Coated with a processed surface (such as carbon paper, digitally gloss-coated media, and colored paper that has been treated)
- Carbon backed
- Unapproved iron-on transfer media (such as heat-sensitive paper, heat-pressure paper, and heat-press transfer paper)
- Cold-water-transfer paper
- Pressure sensitive
- Designed specifically for inkjet printers (such as superfine paper, glossy film, and postcards)
- Already been printed on by another printer, copier, or fax machine
- Dusty
- Wet (or damp)

*Keep media between 35% and 85% relative humidity. Toner does not adhere well to moist or wet paper.*

- Layered
- Adhesive
- Folded, creased, curled, embossed, warped, or wrinkled
- Perforated, three-hole punched, or torn
- Too slick, too coarse, or too textured
- Different in texture (roughness) on the front and back
- Too thin or too thick
- Stuck together with static electricity
- Composed of foil or gilt; too luminous
- Heat sensitive or cannot withstand the fusing temperature (180°C [356°F])
- Irregularly shaped (not rectangular or not cut at right angles)
- Attached with glue, tape, paper clips, staples, ribbons, hooks, or buttons
- Acidic
- Any other media that is not approved

## Thick Stock

Paper thicker than 90 g/m$^2$ (24 lb bond) is referred to as thick stock. Test all thick stock to ensure acceptable performance and to ensure that the image does not shift.

| | | |
|---|---|---|
| **Capacity** | **Tray 1** | Up to 50 thick stock sheets, depending on their thickness |
| | **Tray 2** | Not supported |
| **Orientation** | Face up | |
| **Driver Media Type** | Thick stock (91 to 163 g/m$^2$) | |
| **Weight** | 91 to 163 g/m² (25 to 43 lb) | |
| **Duplexing** | Not supported | |

*43 lb bond is also referred to as 90 lb index stock.*

**DO NOT use thick stock that is**

- Mixed with any other media in the trays (as this will cause printer misfeeding)

## Envelopes

Print on the front (address) side only. Some parts of the envelope consist of three layers of paper—the front, back, and flap. Anything printed in these layered regions may be lost or faded.

| | | |
|---|---|---|
| **Capacity** | **Tray 1** | Up to 10 envelopes, depending on their thickness |
| | **Tray 2** | Not supported |
| **Orientation** | Face up | |
| **Driver Media Type** | Envelope | |
| **Weight** | 60 to 163 g/m² (16 to 43 lb bond) | |
| **Duplexing** | Not supported | |

**Use envelopes that are**

- Common office envelopes approved for laser printing with diagonal joints, sharp folds and edges, and ordinary gummed flaps

  *Because the envelopes pass through heated rollers, the gummed area on the flaps may seal. Using envelopes with emulsion-based glue avoids this problem.*

- Approved for laser printing
- Dry

**DO NOT use envelopes that have**

- Sticky flaps
- Tape seals, metal clasps, paper clips, fasteners, or peel-off strips for sealing
- Transparent windows
- Too rough of a surface
- Material that will melt, vaporize, offset, discolor, or emit dangerous fumes
- Been presealed

## Labels

A sheet of labels consists of a face sheet (the printing surface), adhesive, and a carrier sheet:

- The face sheet must follow the plain paper specification.
- The face sheet surface must cover the entire carrier sheet, and no adhesive should come through on the surface.

You can print continuously with label sheets. However, this could affect the media feed, depending on the media quality and printing environment. If problems occur, stop the continuous printing and print one sheet at a time.

Try printing your data on a sheet of plain paper first to check placement. Check your application documentation for more information on printing labels.

| | | |
|---|---|---|
| **Capacity** | **Tray 1** | Up to 50 label sheets, depending on their thickness |
| | **Tray 2** | Not supported |
| **Orientation** | Face up | |
| **Driver Media Type** | Labels | |
| **Weight** | 60 to 163 g/m² (16 to 90 lb) | |
| **Duplexing** | Not supported | |

**Use label sheets that are**

- Recommended for laser printers

**DO NOT use label sheets that**

- Have labels that easily peel off or have parts of the label already removed
- Have backing sheets that have peeled away or have exposed adhesive

*Labels may stick to the fuser, causing them to peel off and media misfeeds to occur.*

- Are precut or perforated

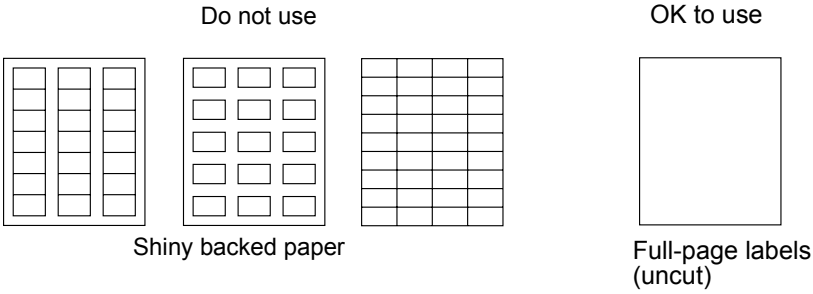


## Letterhead

Try printing your data on a sheet of plain paper first to check placement.

| | | |
|---|---|---|
| **Capacity** | **Tray 1** | Up to 50 sheets, depending on their size and thickness |
| | **Tray 2** | Not supported |
| **Orientation** | Face up | |
| **Driver Media Type** | Letterhead | |
| **Weight** | 60 to 90 g/m² (16 to 24 lb bond) | |
| **Duplexing** | See page 42 for supported sizes (face up—top of page first). | |

## Postcard

Try printing your data on a sheet of plain paper first to check placement.

| | | |
|---|---|---|
| **Capacity** | **Tray 1** | Up to 50 postcards, depending on their thickness |
| | **Tray 2** | Not supported |
| **Orientation** | Face up | |
| **Driver Media Type** | Postcard | |
| **Weight** | 60 to 163 g/m² (16 to 90 lb) | |
| **Duplexing** | Not supported | |

**Use postcards that are**

- Approved for laser printers

**DO NOT use postcards that are**

- Coated
- Designed for inkjet printers
- Precut or perforated
- Preprinted or multicolored

*If the postcard is warped, press on the warped area before putting it in Tray 1.*

- Folded or wrinkled

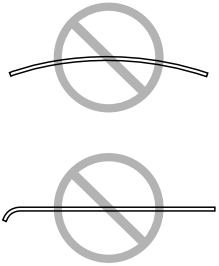

## Transparencies

*Do not fan transparencies before loading them. Resulting static electricity may cause printing errors.*

*If you touch the face of the transparencies with your bare hands, print quality may be affected.*

*Keep the printer path clean. Transparencies are especially sensitive to a dirty media path. If there are shadows on either the top or the bottom of the sheets, see chapter 8, "Maintaining the Printer" .*

*Remove transparencies as soon as possible from the output tray to avoid static buildup.*

You can print continuously with transparencies. However, this could affect the media feed, depending on the media quality, static buildup, and printing environment.

Try printing your data on a sheet of plain paper first to check placement.

*If you have problems feeding 50 sheets, try loading only 1–10 sheets at a time. Loading a large number of transparencies at one time may cause static buildup, causing feeding problems.*

| | | |
|---|---|---|
| **Capacity** | **Tray 1** | Up to 50 transparencies, depending on their thickness |
| | **Tray 2** | Not supported |
| **Orientation** | Face up | |
| **Driver Media Type** | Transparency | |
| **Duplexing** | Not supported | |

*Always first test a small quantity of a particular type of transparency.*

**Use transparencies that are**

- Approved for laser printing

**DO NOT use transparencies that**

- Have static electricity that will cause them to stick together
- Are specified for inkjet printers only

## Glossy

Test all glossy to ensure acceptable performance and to ensure that the image does not shift.

| | | |
|---|---|---|
| **Capacity** | **Tray 1** | Up to 50 glossy sheets, depending on their thickness |
| | **Tray 2** | Not supported |
| **Orientation** | Face up | |
| **Driver Media Type** | Glossy | |
| **Weight** | 60 to 90 g/m² (16 to 24 lb) | |
| **Duplexing** | Not supported | |

**DO NOT use glossy that is**

- Mixed with any other media in the trays (as this will cause printer misfeeding)
- Specified for inkjet printers only

## What Is the Guaranteed Imageable (Printable) Area?

The printable area on all media sizes is up to 4 mm (0.157") from the edges of the media.

Each media size has a specific imageable area, the maximum area on which the printer can print clearly and without distortion.

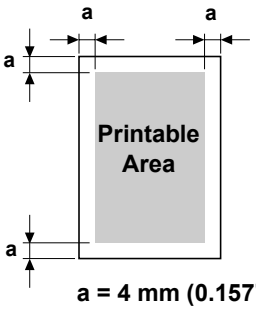

**a = 4 mm (0.157")**

This area is subject to both hardware limits (the physical media size and the margins required by the printer) and software constraints (the amount of memory available for the full-page frame buffer). The guaranteed imageable (printable) area for all media sizes is the page size minus 4 mm (0.157") from all edges of the media.

*When printing in color on legal-size media, the bottom margin is 17.0 mm (0.669").*

*When printing on glossy stock, the top margin is 10 mm (0.394").*

### Imageable Area—Envelopes

Envelopes have a nonguaranteed imageable area that varies with envelope type.

*The envelope print orientation is determined by your application.*

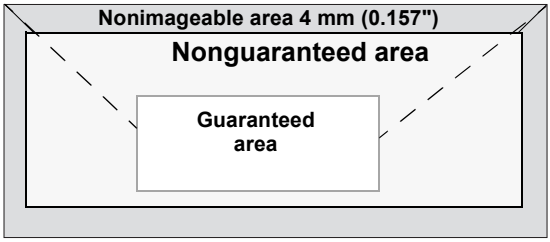


## Page Margins

Margins are set through your application. Some applications allow you to set custom page sizes and margins while others have only standard page sizes and margins from which to choose. If you choose a standard format, you may lose part of your image (due to imageable area constraints). If you can custom-size your page in your application, use those sizes given for the imageable area for optimum results.

# Loading Media

## How do I load media?

Take off the top and bottom sheets of a ream of paper. Holding a stack of approximately 200 sheets at a time, fan the stack to prevent static buildup before inserting it in a tray.

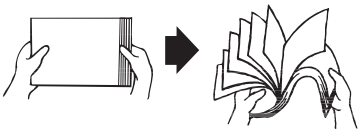

*Do not fan transparencies.*

### Note

**Although this printer was designed for printing on a wide range of media types, it is not intended to print exclusively on a single media type except plain paper. Continuous printing on media other than plain paper (such as envelopes, labels, thick stock, or transparencies) may adversely affect print quality or reduce engine life.**

When refilling media, first remove any media remaining in the tray. Stack it with the new media, even the edges, then reload it.

Do not mix media of different types and sizes, as this will cause media misfeeds.

## Tray 1 (Multipurpose Tray)

For details on the types and sizes of media that can be printed from Tray 1, refer to “Media Specifications” on page 42.

### Loading Plain Paper

1 Open Tray 1.

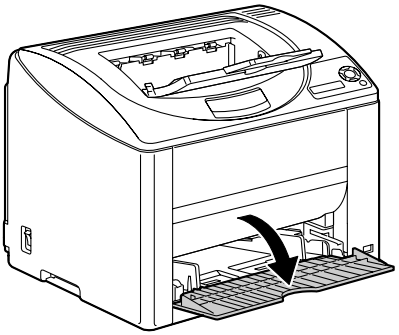

2 Slide the media guides to provide more space between them.

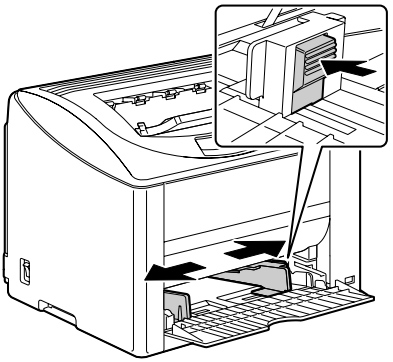

3 Load the paper face up in the tray.

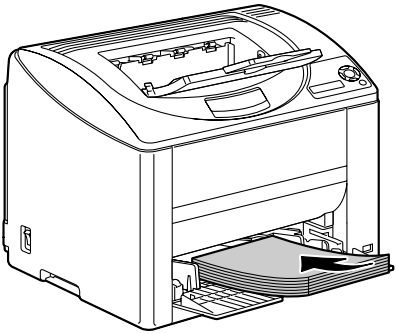

*Do not load paper above the ▼ mark. Up to 200 sheets (80 g/m$^2$ [22 lb]) of plain paper can be loaded into the tray at one time.*

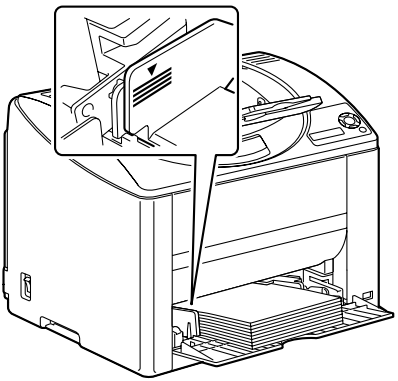

4 Slide the media guides against the edges of the paper.

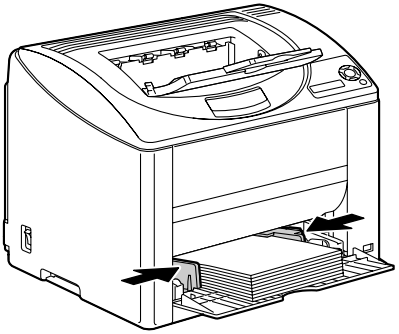

## Other Media

When loading media other than plain paper, set the media mode (for example, Envelope, Label, Thick Stock or Transparency) in the driver for optimum print quality.

## Loading Envelopes

1 Open Tray 1.

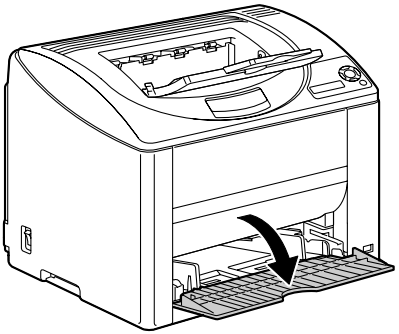

2 Remove any media from the tray.

3 Slide the media guides to provide more space between them.

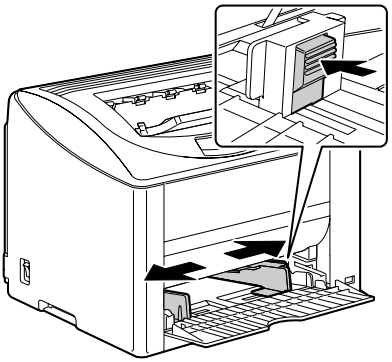

4 Load the envelopes flap side down in the tray.

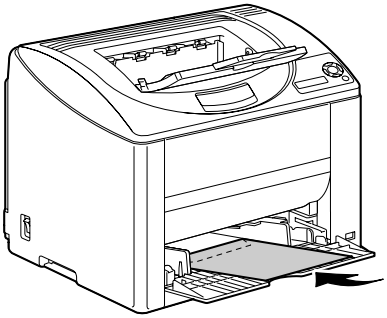

*Before loading envelopes, press them down to make sure that all air is removed, and make sure that the folds of the flaps are firmly pressed, otherwise the envelopes may become wrinkled or a media misfeed may occur.*

*Up to 10 envelopes can be loaded into the tray at one time.*

*For envelopes with the flap along the long edge, load the envelopes with the flap toward the left of the printer.*

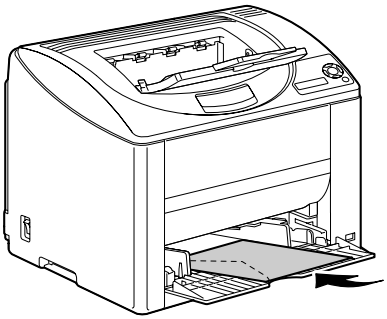

5 Slide the media guides against the edges of the envelopes.

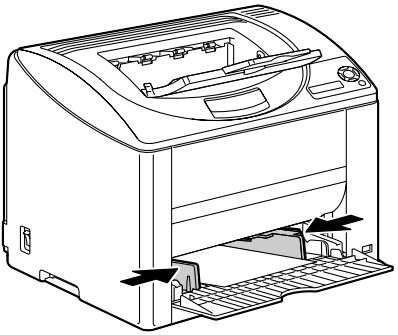

6 Pull the lever, and then open the top cover.

*If there is paper in the output tray, remove it. Fold up the output tray before opening the top cover.*

*Do not touch the transfer belt.*

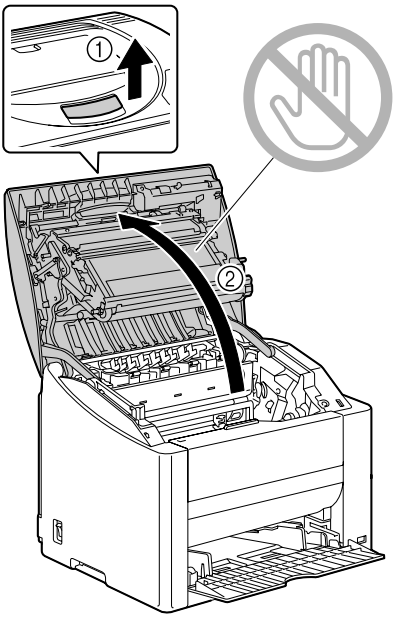

7 Raise the fuser separator levers on the fuser unit.

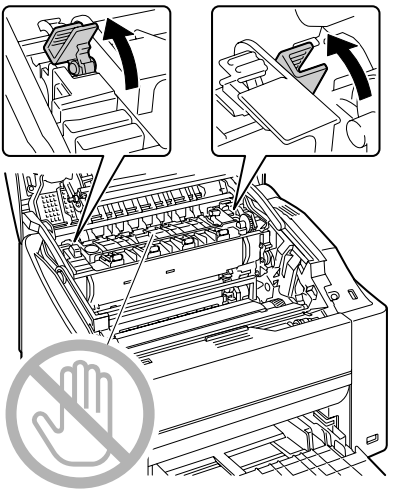

## Note

**Since a media misfeed or decreased print quality may occur, be sure to return the levers on the fuser unit to the setting for plain paper before printing on media other than envelopes.**

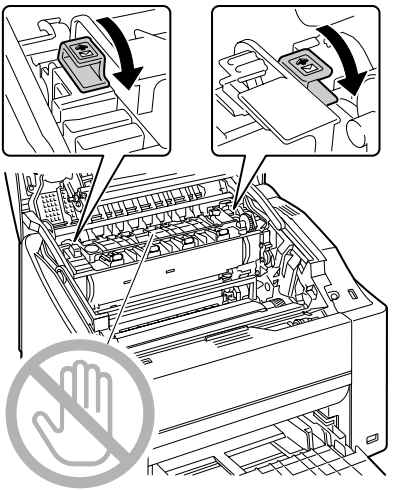

8 Carefully close the top cover.

*Before printing on media other than envelopes, be sure to move the fuser separator levers on the fuser unit to its original position.*

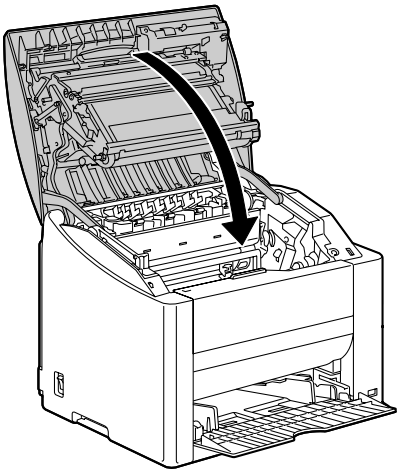

## Loading Labels/Postcard/Thick Stock/Transparency

1 Open Tray 1.

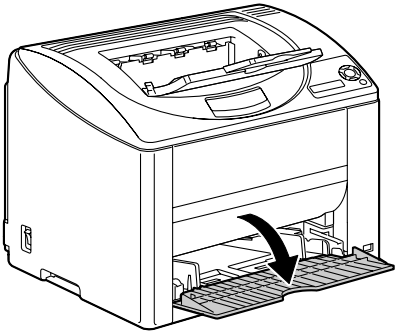

2 Remove any media from the tray.

3 Slide the media guides to provide more space between them.

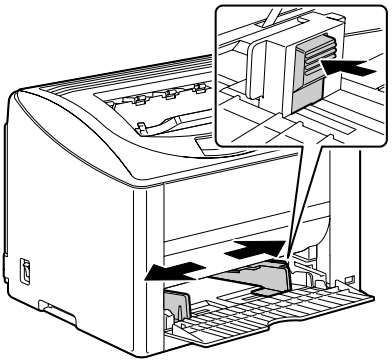

4 Load the media face up in the tray.

*Up to 50 sheets can be loaded into the tray at one time.*

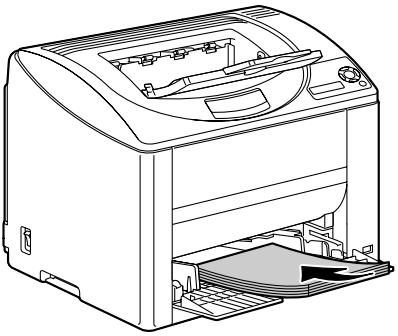

5 Slide the media guides against the edges of the media.

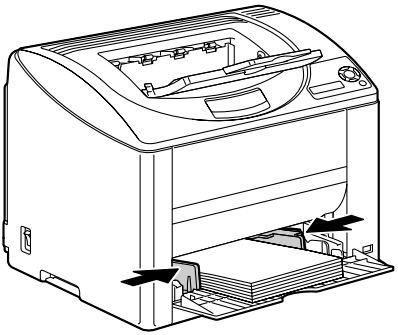

## Tray 2

### Loading Plain Paper

1 Pull out Tray 2 as far as possible.

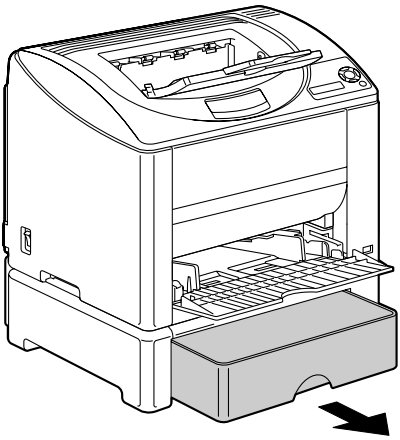

2 Lift up Tray 2 to remove it.

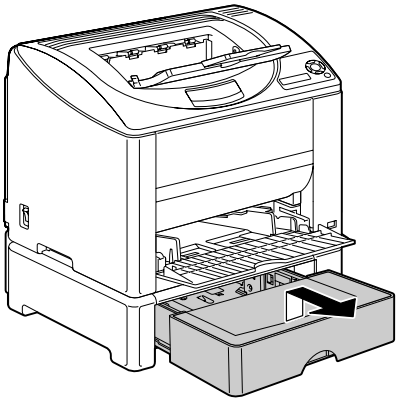

3 Remove the lid from Tray 2.

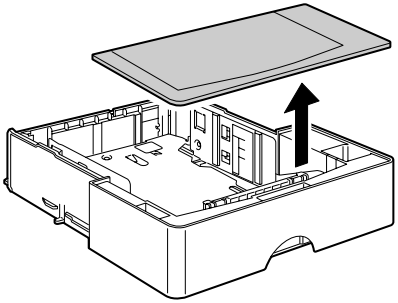

4 Press down the media pressure plate to lock it into place.

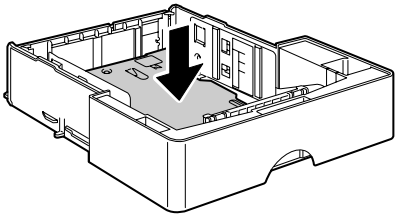

5 Load the paper face up in the tray.

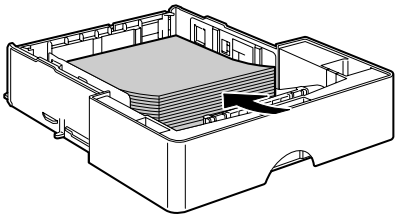

*Do not load above the 100% line. Up to 500 sheets (80 g/m$^2$ [22 lb]) of plain paper can be loaded into the tray at one time.*

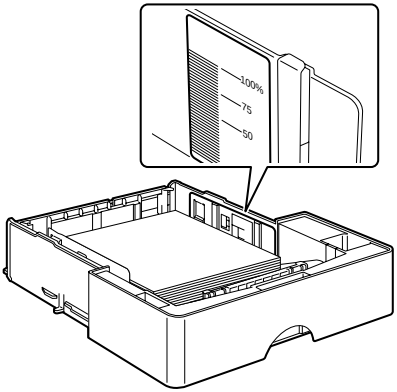


6 Reattach the lid to Tray 2.

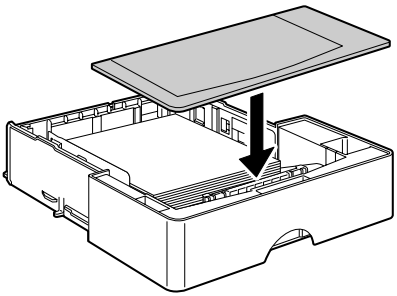

7 Reinsert Tray 2 into the printer.

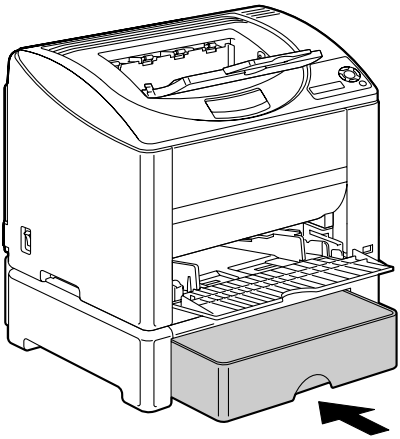

# Duplexing

Select paper with high opacity for duplex (double-sided) printing. Opacity refers to how effectively paper blocks out what is written on the opposite side of the page. If the paper has low opacity (high translucency), then the printed data from one side of the page will show through to the other side. Check your application for margin information. For best results, print a small quantity to make sure the opacity is acceptable.

Duplex (Double-sided) printing can be done automatically with the duplex option installed and selected.

## Note

**Only plain paper, 60–90 g/m$^2$ (16–24 lb bond) can be autoduplexed. See "Media Specifications" on page 42.**

**Duplexing envelopes, labels, transparencies, or glossy is not supported.**

## How do I autoduplex?

You should verify that the duplex option is physically installed on the printer to successfully duplex the job. If the duplex option is not installed and duplex job is sent, the control panel will display `DUPLEX UNIT NOT ATTACHED`.

Check your application to determine how to set your margins for duplex printing.

The following Duplex/Booklet settings are available.

| | |
|---|---|
| 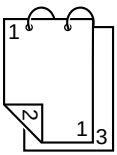 | If "Short Edge Binding" is selected, the pages will be laid out to flip at the top. |
| 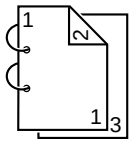 | If "Long Edge Binding" is selected, the pages will be laid out to flip at the sides. |

| | |
|---|---|
| 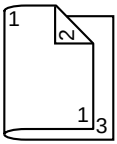 | If “Booklet Left Binding” is selected, the pages can be folded as a left-bound booklet. |
| 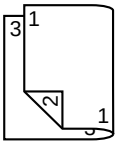 | If “Booklet Right Binding” is selected, the pages can be folded as a right-bound booklet. |

1 Load plain paper into the tray.

2 From the printer driver, specify the layout for duplex printing.

3 Click **OK**.

*With autoduplexing, the back side is printed first, and then the front side is printed.*

# Output Tray

All printed media is output to the face-down output tray on top of the printer. This tray has a capacity of approximately 200 sheets (A4/Letter) of 80 g/m$^2$ (22 lb) paper.

*If the media is stacked too high in the output tray, your printer may experience media misfeeds, excessive media curl, or static buildup.*

*Remove transparencies as soon as possible from the output tray to avoid static buildup.*

# Media Storage

## How do I store media?

- Keep media on a flat, level surface in its original wrapper until it is time to load it.

  *Media that has been stored for a long time out of its packaging may dry up too much and cause misfeeding.*

- If media has been removed from its wrapper, place it in its original packaging and store in a cool, dark place on a level surface.
- Avoid moisture, excessive humidity, direct sunlight, excessive heat (above 35°C [95°F]), and dust.
- Avoid media leaning against other objects or placing it in an upright position.

Before using stored media, do a trial print and check print quality.

# 7

# *Replacing Consumables*

# Replacing Consumables

**Note**

**Failure to follow instructions as outlined in this manual could result in voiding your warranty.**

## About Toner Cartridges

Your printer uses four toner cartridges: black, yellow, magenta, and cyan. Handle the toner cartridges carefully to avoid spilling toner inside the printer or on yourself.

*Install only new toner cartridges in your printer. If a used toner cartridge is installed, the indicator message will not clear and the supplies status in the Status Display will not be updated.*

*The toner is nontoxic. If you get toner on your skin, wash it off with cool water and a mild soap. If you get toner on your clothes, lightly dust them off as best as you can. If some toner remains on your clothes, use cool, not hot water, to rinse the toner off.*

**CAUTION**

**If you get toner in your eyes, wash it out immediately with cool water and consult a doctor.**

*Refer to the following URL for recycling information.*
*Americas:http://printer.konicaminolta.net/products/recycle/index.asp*
*Europe:http://www.minolta-qms.nl/nlen/frames/cleanplanet.htm*

**Note**

**Do not use refilled toner cartridges or unapproved toner cartridges. Any damage to the printer or quality problems caused by a refilled toner cartridge or unapproved toner cartridge will void your warranty. No technical support is provided to recover from these problems.**

When replacing a toner cartridge, refer to the following table. For optimum print quality and performance, use only approved KONICA MINOLTA toner cartridges for your specific printer type, as listed in the table below. If you open the top cover, you can find your printer type and the toner cartridge part numbers on the consumables reorder label inside your printer.

| Printer Type | Printer Part Number | Toner Cartridge Type | Toner Cartridge Part Number |
|---|---|---|---|
| AM | A00V-012 | Standard-Capacity Toner Cartridge -Yellow (Y) | A00W121 |
| | | Standard-Capacity Toner Cartridge -Magenta (M) | A00W221 |
| | | Standard-Capacity Toner Cartridge -Cyan (C) | A00W321 |
| | | Standard-Capacity Toner Cartridge -Black (K) | A00W829 |
| | | High-Capacity Toner Cartridge - Black (K) | A00W422 |
| | | High-Capacity Toner Cartridge - Yellow (Y) | A00W122 |
| | | High-Capacity Toner Cartridge - Magenta (M) | A00W222 |
| | | High-Capacity Toner Cartridge - Cyan (C) | A00W322 |
| EU | A00V-022<br>A00V-032 | Standard-Capacity Toner Cartridge -Yellow (Y) | A00W131 |
| | | Standard-Capacity Toner Cartridge -Magenta (M) | A00W231 |
| | | Standard-Capacity Toner Cartridge -Cyan (C) | A00W331 |
| | | High-Capacity Toner Cartridge - Black (K) | A00W432 |
| | | High-Capacity Toner Cartridge - Yellow (Y) | A00W132 |
| | | High-Capacity Toner Cartridge - Magenta (M) | A00W232 |
| | | High-Capacity Toner Cartridge - Cyan (C) | A00W332 |
| AP | A00V-042 | Standard-Capacity Toner Cartridge -Yellow (Y) | A00W141 |
| | | Standard-Capacity Toner Cartridge -Magenta (M) | A00W241 |
| | | Standard-Capacity Toner Cartridge -Cyan (C) | A00W341 |
| | | High-Capacity Toner Cartridge - Black (K) | A00W442 |
| | | High-Capacity Toner Cartridge - Yellow (Y) | A00W142 |
| | | High-Capacity Toner Cartridge - Magenta (M) | A00W242 |
| | | High-Capacity Toner Cartridge - Cyan (C) | A00W342 |
| GC | A00V-082 | Standard-Capacity Toner Cartridge -Yellow (Y) | A00W151 |
| | | Standard-Capacity Toner Cartridge -Magenta (M) | A00W251 |
| | | Standard-Capacity Toner Cartridge -Cyan (C) | A00W351 |
| | | High-Capacity Toner Cartridge - Black (K) | A00W452 |
| | | High-Capacity Toner Cartridge - Yellow (Y) | A00W152 |
| | | High-Capacity Toner Cartridge - Magenta (M) | A00W252 |
| | | High-Capacity Toner Cartridge - Cyan (C) | A00W352 |

| Printer Type | Printer Part Number | Toner Cartridge Type | Toner Cartridge Part Number |
|---|---|---|---|
| TW | A00V-072 | Standard-Capacity Toner Cartridge -Yellow (Y) | A00W121 |
| | | Standard-Capacity Toner Cartridge -Magenta (M) | A00W221 |
| | | Standard-Capacity Toner Cartridge -Cyan (C) | A00W321 |
| | | Standard-Capacity Toner Cartridge -Black (K) | A00W829 |
| | | High-Capacity Toner Cartridge - Black (K) | A00W422 |
| | | High-Capacity Toner Cartridge - Yellow (Y) | A00W122 |
| | | High-Capacity Toner Cartridge - Magenta (M) | A00W222 |
| | | High-Capacity Toner Cartridge - Cyan (C) | A00W322 |

Keep toner cartridges:

- In their packaging until you're ready to install them.
- In a cool, dry location away from sunlight (due to heat).

  *The maximum storage temperature is 35° C (95° F) and the maximum storage humidity is 85% (noncondensing). If the toner cartridge is moved from a cold place to a warm, humid place, condensation may occur, degrading print quality. Allow the toner to adapt to the environment for about one hour before use.*

- Level during handling and storage.

  *Do not hold, stand or store cartridges on their ends or turn them upside down; the toner inside the cartridges may become caked or unequally distributed.*

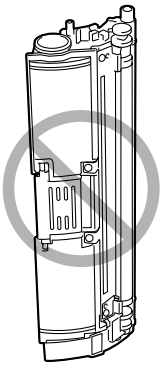

- Away from salty air and corrosive gases such as aerosols.

## Note

**Be careful not to spill toner while replacing a toner cartridge. If toner spills, immediately wipe it off with a soft, dry cloth.**

If TONER EMPTY on the ENGINE/TONER EMPTY menu is set to STOP, the message TONER LIFE END X (where "X" represents the color of the toner) appears when a toner cartridge becomes empty. Follow the steps below to replace the toner cartridge.

*If TONER EMPTY on the ENGINE/TONER EMPTY menu is set to CONTINUE, the message TONER EMPTY X appears.*

1 Check the message window to see which color of toner is empty. Perform the operation described below to automatically rotate the carousel to move the toner cartridge for the specified color, so that it can be replaced.

| Press Key | Until Display Reads |
|---|---|
| | TONER LIFE END X or<br>TONER EMPTY X |
| Menu Select | MENU<br>SPECIAL PAGES |
| ► | MENU<br>ENGINE |
| Menu Select | ENGINE<br>REPLACE TONER |
| ▼ | REPLACE TONER<br>BLACK |
| ► Press until appropriate color is displayed. | REPLACE TONER<br>X |
| Menu Select | PLEASE WAIT |
| | Then, it displays OPEN DOOR/REPLACE TONER X |

2 Pull the lever, and then open the top cover.

*If there is paper in the output tray, remove it. Fold up the output tray before opening the top cover.*

*Do not touch the transfer belt.*

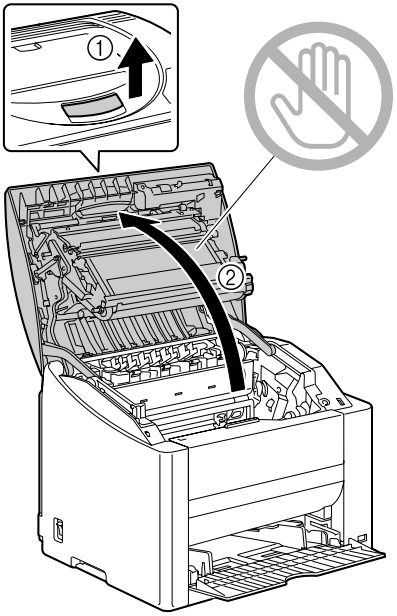


3 Open the front cover and check that the toner cartridge to be replaced has rotated to the exchange position.

*You can identify the toner cartridge by the color of the handle and by the letter molded into the handle: C (cyan), M (magenta), Y (yellow) and K (black).*

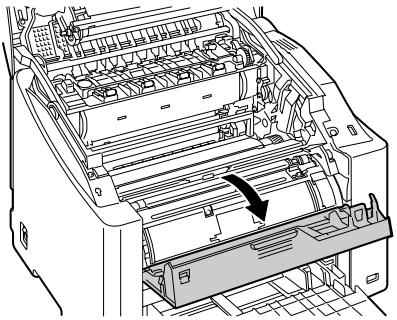

4 Pull the handle on the toner cartridge toward you, and then pull the toner cartridge up to remove it.

*Do not manually rotate the toner cartridge carousel. In addition, do not rotate the carousel with force, otherwise it may be damaged.*

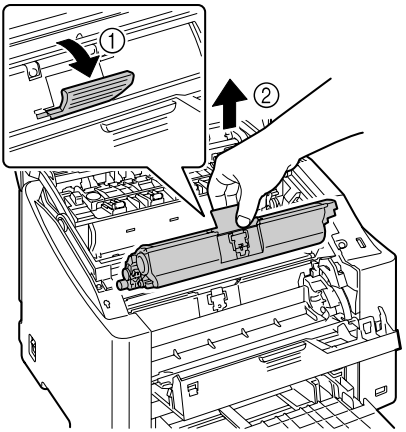


## Note

**Dispose of the empty toner cartridge according to your local regulations. Do not burn the toner cartridge.**

5 Prepare a new toner cartridge.

6 Shake the cartridge a few times to distribute the toner.

*Make sure that the toner roller cover is securely attached before shaking the toner cartridge.*

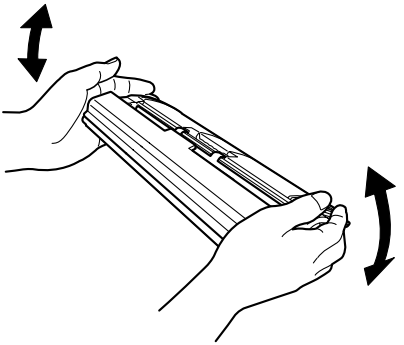

7 Remove the cover from the toner roller.

*Do not touch or scratch the toner roller.*

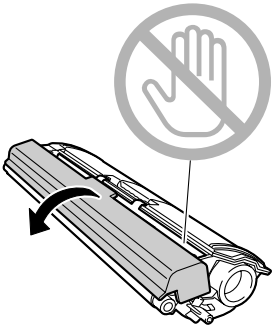

8 Align the shaft on each end of the toner cartridge with its holders, and then insert the cartridge.

*Before inserting the toner cartridge, make sure that the color of the toner cartridge to be installed is the same as the label on the toner cartridge carousel.*

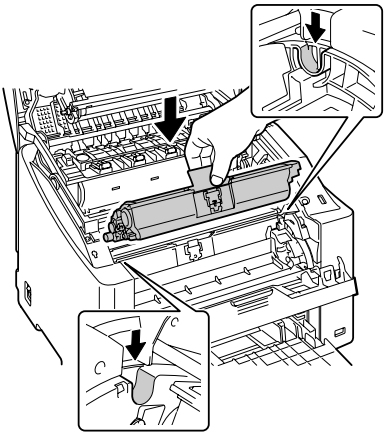

9 Press down on the toner cartridge until it snaps into place.

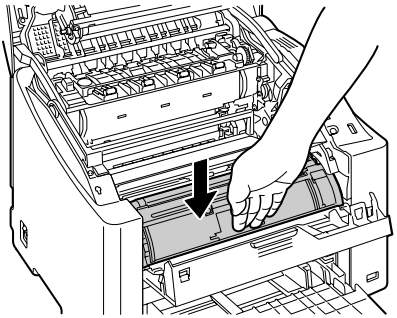

10 Close the front cover.

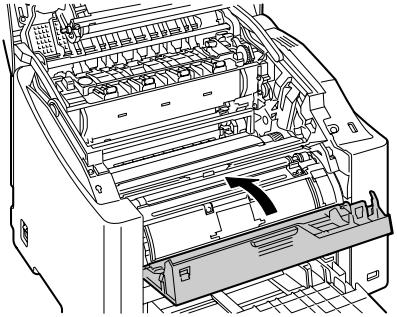

11 Carefully close the top cover.

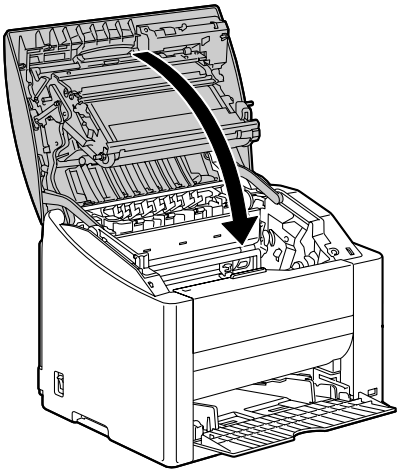

*The printer must complete a calibration cycle (less than 2 minutes) after the toner cartridge has been replaced. If you open the top cover before the message* `READY` *appears, the printer stops and repeats the calibration cycle.*

## Replacing the Drum Cartridge

1 Pull the lever, and then open the top cover.

*If there is paper in the output tray, remove it. Fold up the output tray before opening the top cover.*

*Do not touch the transfer belt.*

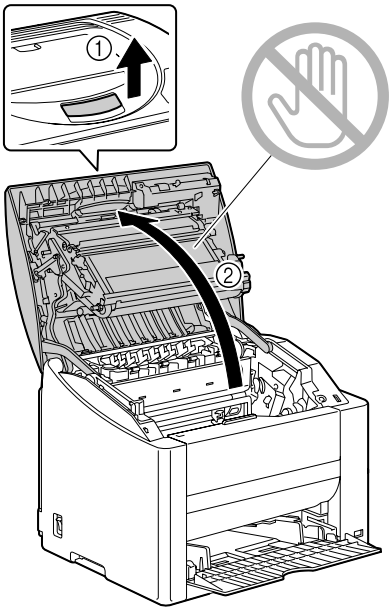


2 Carefully pull out the drum cartridge.

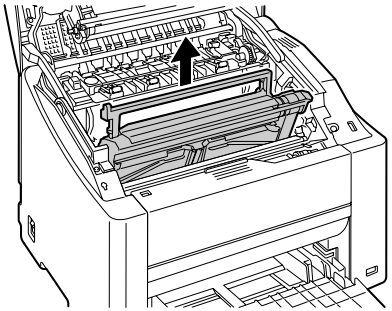

**Note**

**Dispose of the used drum cartridge according to your local regulations. Do not burn the drum cartridge.**

3 Prepare a new drum cartridge.

*Do not touch the PC drum on the drum cartridge.*

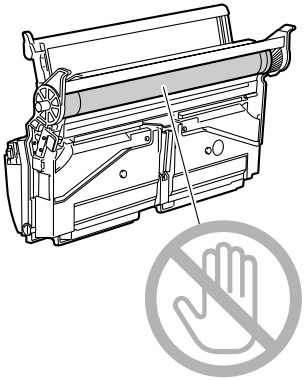

4 Install the new drum cartridge.

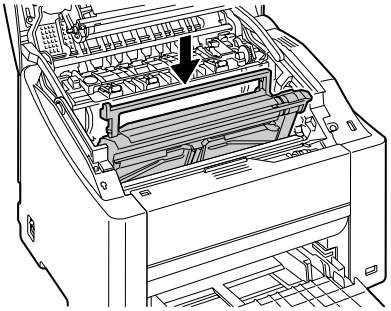

5 Carefully close the top cover.

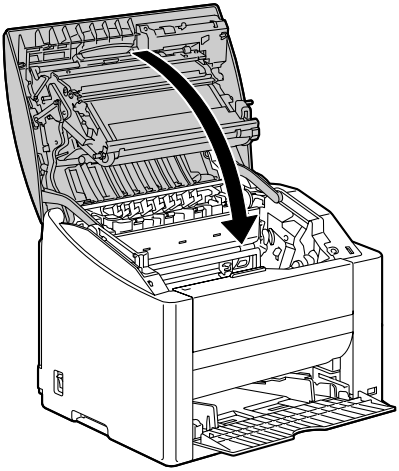

*The printer must complete a calibration cycle (less than 2 minutes) after the drum cartridge has been replaced. If you open the top cover before the message* READY *appears, the printer stops and repeats the calibration cycle.*

# 8

# *Maintaining the Printer*

# Maintaining the Printer

**CAUTION**

**Read all caution and warning labels carefully, making sure to follow any instructions contained in them. These labels are located on the inside of the printer's covers and the interior of the printer body.**

Handle the printer with care to preserve its life. Abuse handling may cause damage and void your warranty. If dust and paper scraps remain on the inside or outside of the printer, printer performance and print quality will suffer, so the printer should be cleaned periodically. Keep the following guidelines in mind.

**WARNING!**

**Turn off the printer, unplug the power cord, and disconnect all interface cables before cleaning. Do not spill water or detergent into the printer; otherwise the printer will be damaged and an electric shock may occur.**

**CAUTION**

**The fuser unit is hot. When the top cover is opened, the fuser unit temperature drops gradually (one hour wait time).**

- Be careful when cleaning the inside of the printer or removing media misfeeds, as the fuser unit and other internal parts may be very hot.
- Do not place anything on top of the printer.
- Use a soft cloth to clean the printer.
- Never spray cleaning solutions directly on the printer's surface; the spray could penetrate through the air vents of the printer and damage the internal circuits.
- Avoid using abrasive or corrosive solutions or solutions that contain solvents (such as alcohol and benzene) to clean the printer.
- Always test any cleaning solution (such as mild detergent) on a small inconspicuous area of your printer to check the solution's performance.
- Never use sharp or rough implements, such as wire or plastic cleaning pads.
- Always close the printer's covers gently. Never subject the printer to vibration.
- Do not cover the printer immediately after using it. Turn it off and wait until it cools down.

- Do not leave the printer's covers open for any length of time, especially in well-lit places; light may damage the drum cartridge.
- Do not open the printer during printing.
- Do not tap media stacks on the printer.
- Do not lubricate or disassemble the printer.
- Do not tilt the printer.
- Do not touch the electrical contacts, gears, or laser devices. Doing so may damage the printer and cause the print quality to deteriorate.
- Keep media in the output tray at a minimum level. If the media is stocked too high, your printer may experience media misfeeds and excessive media curl.
- Keep the printer level to avoid toner spillage.
- When lifting the printer, grasp the areas shown in the figure.

*If you have the duplex option installed, first remove this options before lifting the printer. Do not lift the printer with Tray 2 together.*

- If you get toner on your skin, wash it off with cool water and a mild soap.

**CAUTION**

**If you get toner in your eyes, wash it out immediately with cool water and consult a doctor.**

- Make sure any parts removed during cleaning are replaced before you plug in the printer.

# Cleaning the Printer

**CAUTION**

**Be sure to turn off the printer and unplug the power cord before cleaning.**

## Exterior

### Control Panel

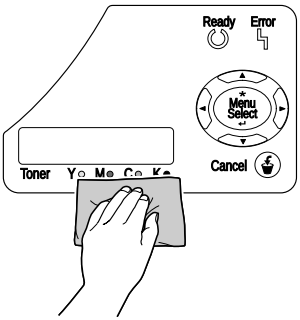


### Ventilation Grill

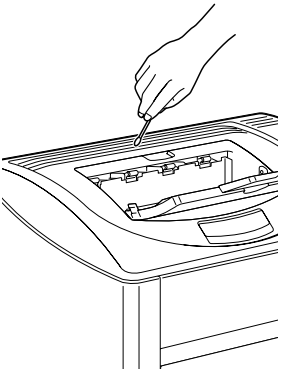

### Printer Exterior

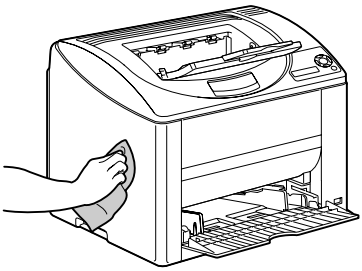

### Filter

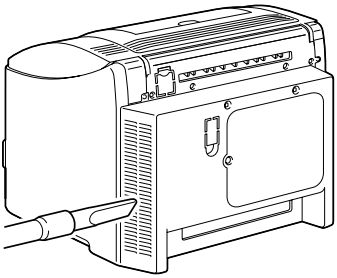

## Interior

### Cleaning the Media Feed Roller and Laser Lens

1 Pull the lever, and then open the top cover.

*If there is paper in the output tray, remove it. Fold up the output tray before opening the top cover.*

*Do not touch the transfer belt.*

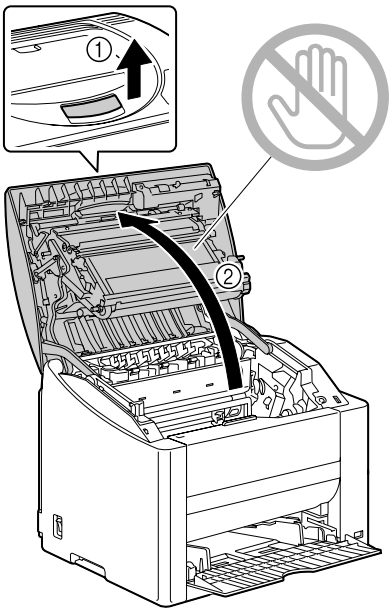


2 Carefully pull out the drum cartridge.

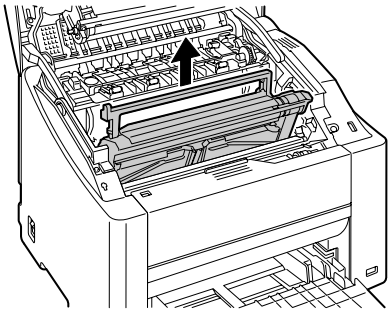

## Note

**Position the removed drum cartridge as shown in the illustration at the right. Be sure to keep the drum cartridge horizontal and place it where it will not become dirty. Do not leave the drum cartridge removed for more than 15 minutes, and do not place the removed drum cartridge in a location where it would be exposed to direct light (such as sunlight).**

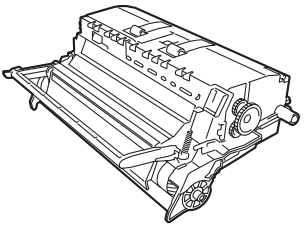

3 Clean the media feed rollers by wiping them with a soft, dry cloth.

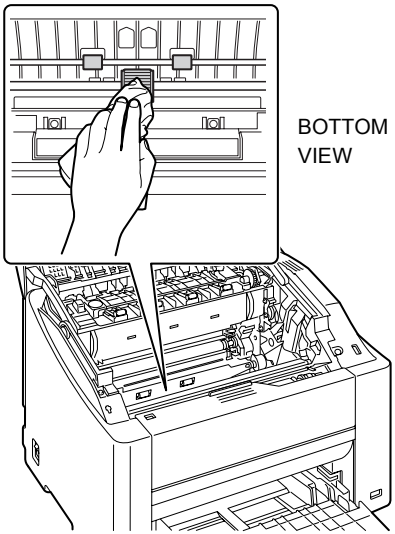

4 Clean the laser lens by wiping it with a soft, dry cloth.

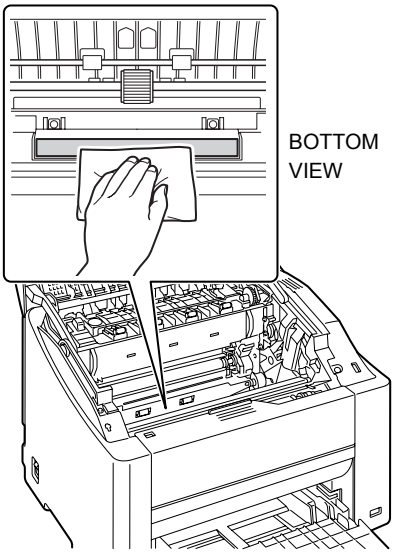


5 Reinstall the drum cartridge.

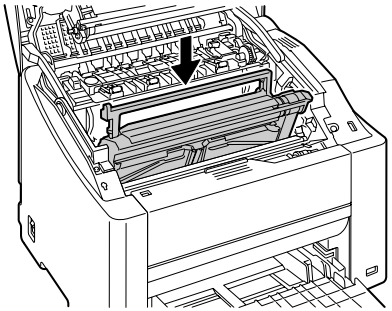

6 Carefully close the top cover.

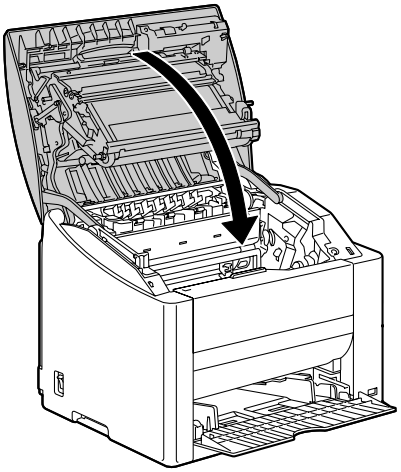

### Cleaning the Duplex Option Feed Rollers

1 Open the duplex cover.

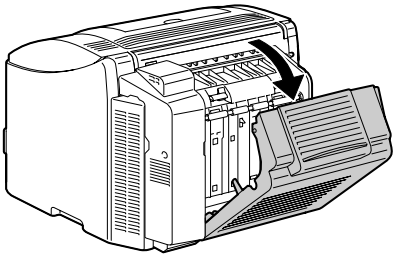

2 Clean the feed rollers by wiping them with a soft, dry cloth.

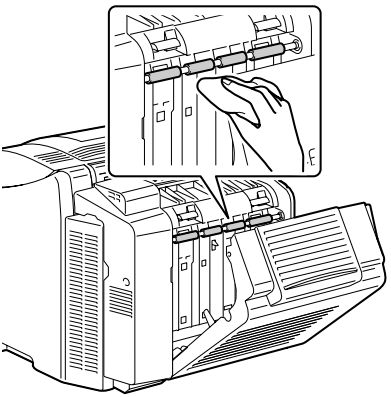

3 Carefully close the duplex cover.

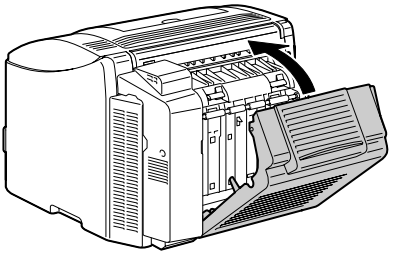

## Cleaning the Media Feed Rollers for Tray 2

1 Lift the printer off of Tray 2 and temporarily place it on a sturdy flat surface.

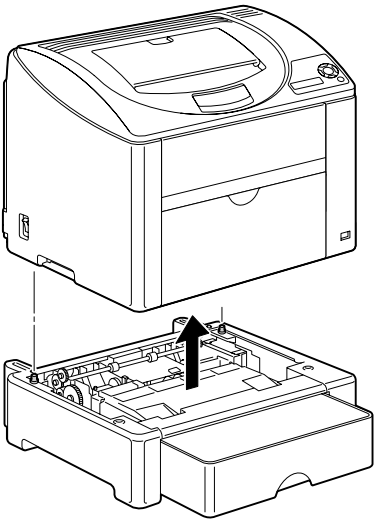

2 Clean the media feed rollers by wiping them with a soft, dry cloth.

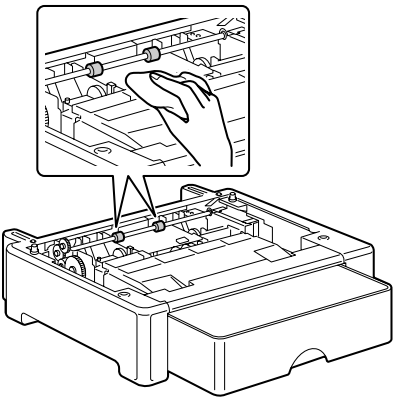

3 Lift the printer and reinstall it on top of Tray 2.

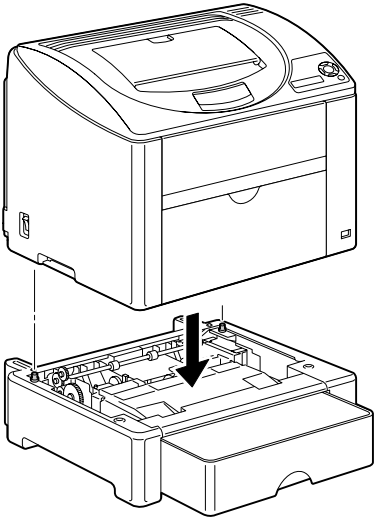

# Storing the Printer

**Note**

**If this printer is not to be used for an extended period of time, store the printer with the fuser separator levers raised (set to the envelope position).**

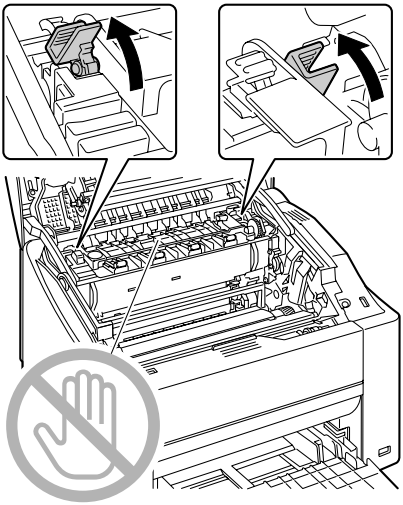

## Note

**Since a media misfeed or decreased print quality may occur, be sure to return the levers on the fuser unit to the setting for plain paper before printing on media other than envelopes.**

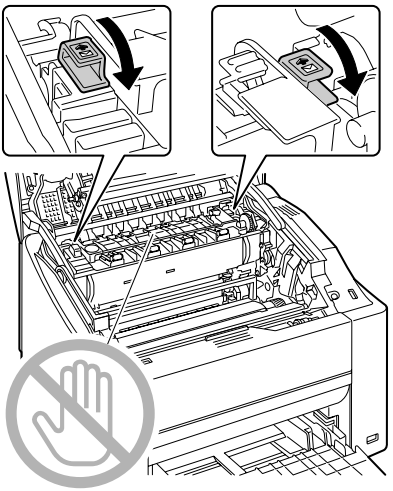

# 9 Troubleshooting

# Introduction

This chapter provides information to aid you in resolving printer problems you may encounter, or at least guide you to the proper sources for help.


| | |
|---|---|
| Printing the configuration page | Page 94 |
| Preventing media misfeeds | Page 95 |
| Understanding the media path | Page 96 |
| Clearing media misfeeds | Page 96 |
| Solving problems with media misfeeds | Page 105 |
| Solving other problems | Page 108 |
| Solving problems with printing quality | Page 113 |
| Status, error, and service messages | Page 119 |


# Printing the Configuration Page

Print the configuration (CONFIG) page to verify the printer is printing correctly.

| Press Key (once) | Until Display Reads |
|---|---|
| | READY |
| * Menu Select | SPECIAL PAGES |
| * Menu Select | PRINT CONFIG PAGE |
| * Menu Select | The configuration page prints and the printer goes back to READY. |

# Preventing Media Misfeeds

| **Make sure that...** |
|---|
| Media matches the printer specifications. |
| Media is flat, especially on the leading edge. |
| The printer is on a hard, flat, level surface. |
| You store media in a dry location away from moisture and humidity. |
| You remove transparencies from the output tray immediately after printing to avoid static buildup. |
| You always adjust the media guides in Tray 1 *after* inserting the media *(a guide that is not properly adjusted can cause poor print quality, media misfeeds, and printer damage).* |
| You load the media printing-side up in the tray *(many manufacturers place an arrow on the end of the wrapper to indicate the printing side).* |

| **Avoid...** |
|---|
| Media that is folded, wrinkled, or excessively curled. |
| Double feeding *(remove the media and fan the sheets—they may be sticking together).* |
| Fanning transparencies since this causes static. |
| Loading more than one type/size/weight of media in a tray at the same time. |
| Overfilling the trays. |
| Allowing the output tray to overfill *(the output tray has a 200-sheet capacity—misfeeding may occur if you allow more than 200 sheets of media to accumulate at one time).* |
| Allowing the output tray to fill with more than a few transparencies. |

# Understanding the Media Path

Understanding the printer's media path will help you locate media misfeeds.

1 Output tray

2 Transfer belt unit

3 Toner cartridge carousel

4 Drum cartridge

5 Tray 1

6 Tray 2 (optional)

7 Duplex option

8 Fuser unit

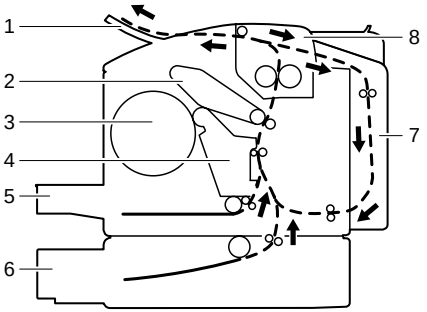


# Clearing Media Misfeeds

To avoid damage, always remove misfed media gently, without tearing it. Any piece of media left in the printer, whether large or small, can obstruct the media path and cause further misfeeds. Do not reload media that has misfed.

**Note**

**The image is not fixed on the media before the fusing process. If you touch the printed surface, the toner may stick to your hands, so be careful not to touch the printed face when removing the misfed media. Make sure not to spill any toner inside the printer.**

**CAUTION**

**Unfused toner can dirty your hands, clothes, or anything else it gets on. If you accidentally get toner on your clothes, lightly dust them off as best as you can. If some toner remains on your clothes, use cool, not hot water, to rinse the toner off. If toner gets on your skin, wash it off with cool water and a mild soap.**

**CAUTION**

**If you get toner in your eyes, wash it out immediately with cool water and consult a doctor.**

If, after clearing the media misfeed, the misfeed message in the control panel window persists, open and close the printer's top cover. This should clear the misfeed message.

## Media Misfeed Messages and Clearing Procedures

| Media Misfeed Message | Page Reference |
|---|---|
| MEDIA JAM<br>TRAY 1 | Page 97 |
| MEDIA JAM<br>FUSER | Page 97 |
| MEDIA JAM<br>TRANSFER ROLLER | Page 97 |
| MEDIA JAM<br>TRAY 2 | Page 101 |
| MEDIA JAM<br>DUPLEX LOWER | Page 103 |
| MEDIA JAM<br>DUPLEX UPPER | Page 103 |

### Clearing a Media Misfeed in the Printer

1 Pull the lever, and then open the top cover.

*If there is paper in the output tray, remove it. Fold up the output tray before opening the top cover.*

*Do not touch the transfer belt.*

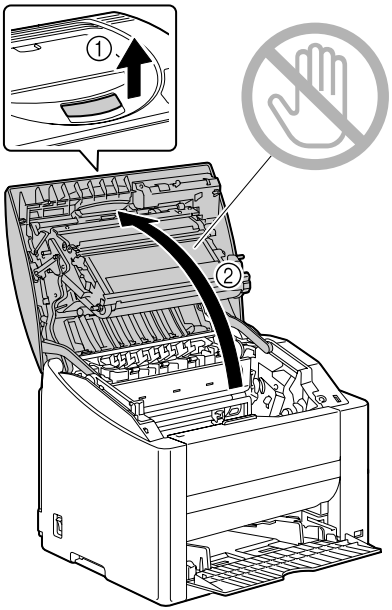

2 Carefully pull out the drum cartridge.

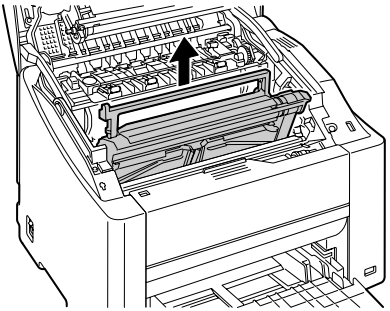

## Note

**Position the removed drum cartridge as shown in the illustration at the right. Be sure to keep the drum cartridge horizontal and place it where it will not become dirty. Do not leave the drum cartridge removed for more than 15 minutes, and do not place the removed drum cartridge in a location where it would be exposed to direct light (such as sunlight).**

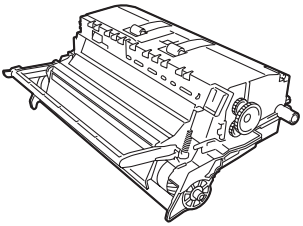

3 Push the fuser separator levers back as far as possible.

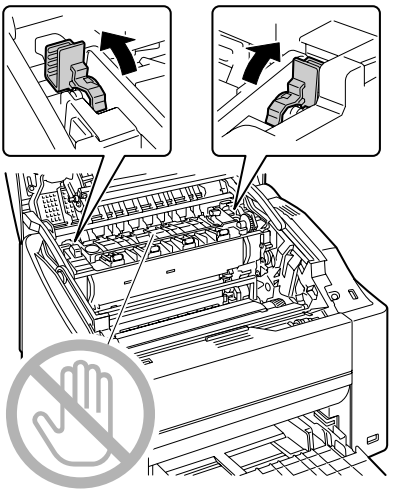

4 Remove any misfed media.

*Always remove the misfed media in the feed direction as shown only. If it is difficult to remove the media from the fuser unit, raise the fuser separator levers to the position for envelope printing, and then remove the media. After removing the media, set the fuser separator levers to their original positions.*

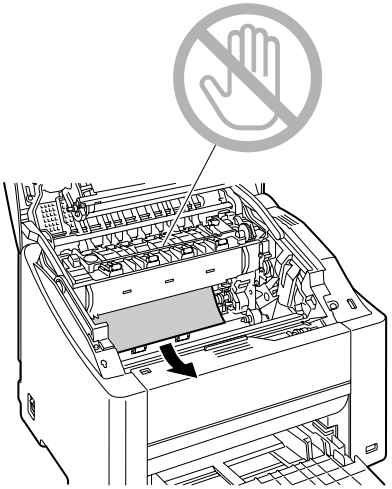

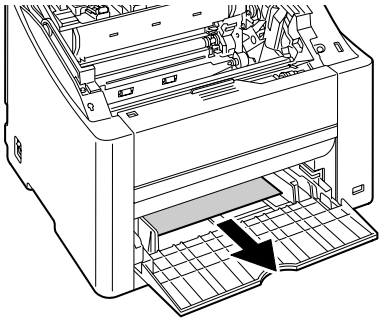

5 Return the fuser separator levers to their original positions.

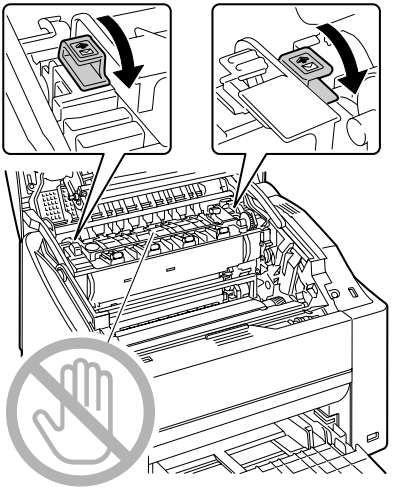

6 Reinstall the drum cartridge.

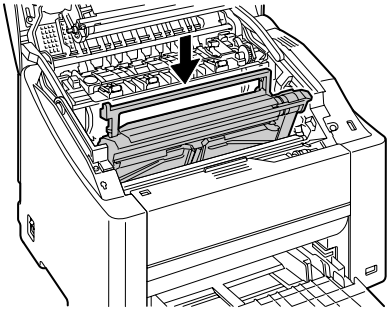

7 Carefully close the top cover.

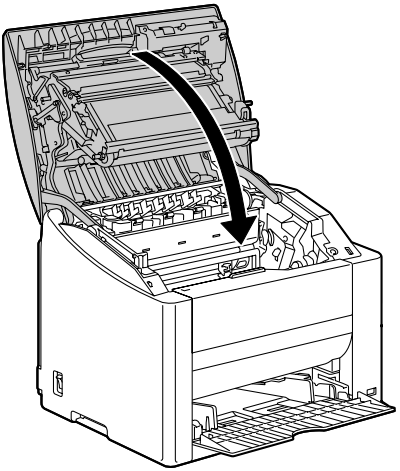

### Clearing a Media Misfeed From Tray 2

1 Pull out Tray 2 as far as possible.

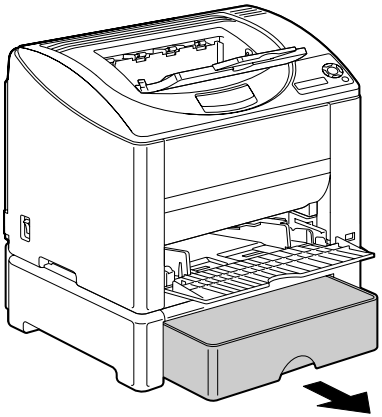

2 Lift up Tray 2 to remove it.

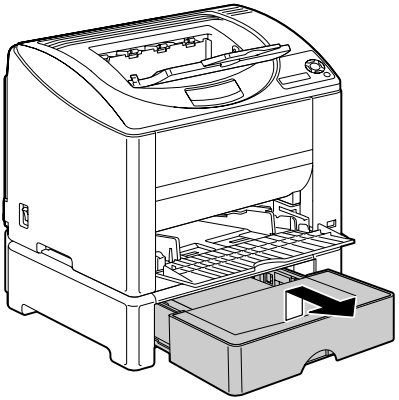

3 Remove any misfed paper.

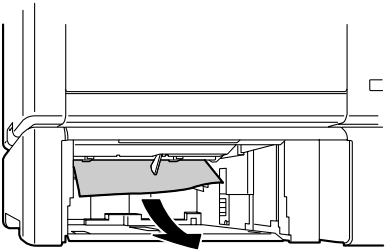

4 Remove the lid from Tray 2, and then remove all paper from the tray.

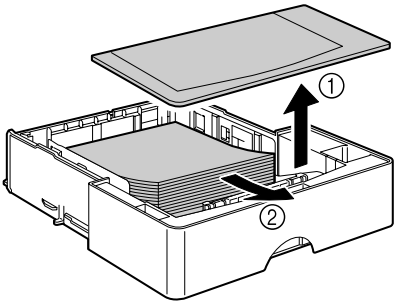


5 Fan the paper, and align its edges.

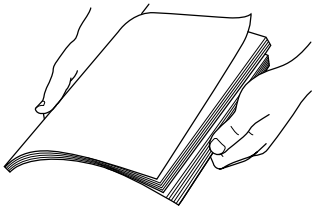

6 Load the media in Tray 2, and attach the lid.

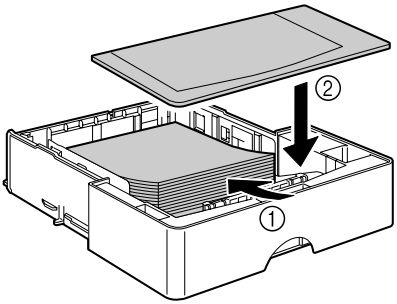

7 Reinsert Tray 2.

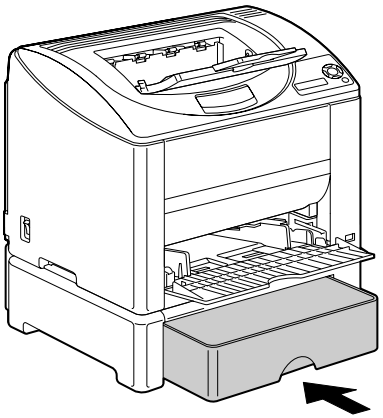

## Clearing a Media Misfeed from the Duplex Option

1 Open the duplex cover.

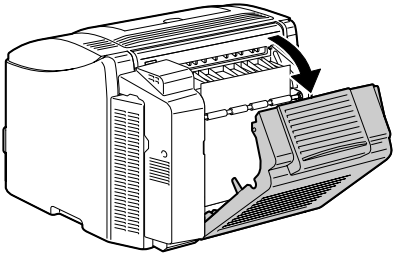

2 Carefully pull out the misfed media.

*Always remove the misfed media in the feed direction as shown only.*

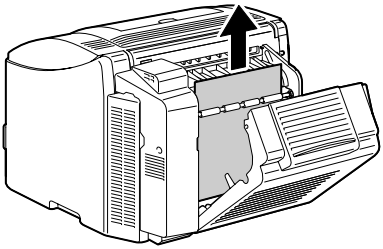

3 Close the duplex cover.

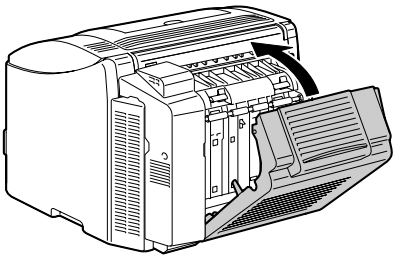

# Solving Problems with Media Misfeeds

*Frequent misfeeds in any area indicate that area should be checked, repaired, or cleaned. Repeated misfeeds may also happen if you're using unsupported print media.*

| Symptom | Cause | Solution |
|---|---|---|
| Several sheets go through the printer together. | The front edges of the media are not even. | Remove the media and even up the front edges, then reload it. |
| | The media is moist from humidity. | Remove the moist media and replace it with new, dry media. |
| | Too much static electricity is present. | Do not fan transparencies. |
| Media misfeed message stays on. | Top cover needs to be opened and closed again to reset the printer. | Open and close the top cover of the printer again. |
| | Some media remains misfed in the printer. | Recheck the media path and make sure that you have removed all of the misfed media. |
| Duplex option misfeeds. | Unsupported media (wrong size, thickness, type, etc.) is being used. | Use KONICA MINOLTA-approved media. See "Media Specifications" on page 42. |
| | | Plain paper, recycled paper, letter head, postcard, and thick stock can be autoduplexed if the duplex option is installed and the media type is set properly in the driver. See "Media Specifications" on page 42. |
| | | Make sure that you have not mixed media types in Tray 1. |
| | | Do not duplex, envelopes, labels, or transparencies. |
| | Media is still being misfed. | Recheck the media path inside the duplex option and make sure that you have removed all of the misfed media. |

| Symptom | Cause | Solution |
|---|---|---|
| Media is misfeeding. | The media is not correctly positioned in the tray. | Remove the misfed media and reposition the media properly in the tray. |
| | The number of sheets in the tray exceeds the maximum allowed. | Remove the excess media and reload the correct number of sheets in the tray. |
| | The media guides are not correctly adjusted to the media size. | Adjust the media guides in the Tray 1 to match the size of the media. |
| | Warped or wrinkled media is loaded in the tray. | Remove the media, smooth it out, and reload it. If it still misfeeds, do not use that media. |
| | The media is moist from humidity. | Remove the moist media and replace it with new, dry media. |
| | Custom-sized media, envelopes, labels, postcards, thick stock, or transparencies are loaded in Tray 2. | Special media must be loaded in Tray 1 only. |
| | The recommended transparency or label sheet is facing the wrong way in Tray 1. | Load the transparencies or label sheets according to the manufacturer's instructions. |
| | Envelopes are facing the wrong way in Tray 1. | Load the envelopes in Tray 1 with the flaps facing down. |
| | | If the flaps are on the long edge, load the envelopes with the flap toward the left of the printer with the flaps facing down. |

| Symptom | Cause | Solution |
|---|---|---|
| Media is misfeeding. | Transparencies have collected static electricity in the tray. | Remove the transparencies and load them in Tray 1 one sheet at a time. Do not fan transparencies before loading them. |
| | Unsupported media (wrong size, thickness, type, etc.) is being used. | Use KONICA MINOLTA-approved media.<br>See “Media Specifications” on page 42. |
| | The media feed roller is dirty. | Clean the media feed roller.<br>For more details, refer to “Interior” on page 85. |

# Solving Other Problems

*To order KONICA MINOLTA consumables, go to www.q-shop.com.*

| Symptom | Cause | Solution |
|---|---|---|
| Printer power is not on. | The power cord is not correctly plugged into the outlet. | Turn off the printer, confirm that the power cord is correctly plugged into the outlet, and then turn on the printer. |
| | Something is wrong with the outlet connected to the printer. | Plug another electrical appliance into the outlet and see whether it operates properly. |
| | The power switch is not correctly turned on (I position). | Turn the power switch off (O position), then turn it back to the on (I position). |
| | The printer is connected to an outlet with a voltage or frequency that does not match the printer specifications. | Use a power source with the specifications listed in appendix A, “Technical Specifications.” |
| The control panel displays `TONER LOW` much sooner than expected. | One of the toner cartridges may be defective. | Remove the toner cartridges and check for damage. If it is damaged, replace it. |
| | You printed with heavy toner coverage. | See specifications in Appendix A. |
| You can’t print the configuration page. | The tray is empty. | Check that at least Tray 1 is loaded with media, in place, and secure. |
| | The printer’s covers aren’t closed securely. | Make sure the covers are closed securely. Close all covers gently to avoid jarring the printer. |
| | There is a media misfeed. | Clear the media misfeed. |

| Symptom | Cause | Solution |
|---|---|---|
| Images cannot be printed from the digital camera. | The digital camera transfer mode is not set to PictBridge.<br> *Printer only supports a PictBridge compliant digital camera.* | Set the digital camera transfer mode to PictBridge. |
| Printing takes too much time. | The printer is set to a slow printing mode (for example, thick stock or transparency). | It takes more time to print with special media. When using regular paper, make sure that the media type is set properly in the driver. |
| | The printer is set to power saving mode. | It takes time for printing to start in power saving mode. If you do not want to use this mode, disable it. (`ENGINE/SERVICE/ENERGY SAVER` menu) |
| | The job is very complex. | Wait. No action needed. |
| | The printer memory is insufficient. | Add more memory. |
| | A toner cartridge for a different region is installed (`INCORRECT CART. X` is displayed in the message window). | Install a correct KONICA MINOLTA toner cartridge approved for your specific printer. |
| Blank pages are printed. | One or more of the toner cartridges are defective or empty. | Check the toner cartridges. The image will not print correctly or not at all, if the cartridges are empty. |
| | The wrong media is being used. | Check that the media type set in the driver matches the media loaded in the printer. |

| Symptom | Cause | Solution |
|---|---|---|
| Printer returned to READY before the configuration menu was changed. | The printer was in the configuration menu structure without a selection being made within two minutes. | When in the configuration menu structure, select your choice within 2 minutes. |
| Not all pages print. | The Cancel key was pressed. | Make sure no one pressed the Cancel key while your job was printing. |
| | The tray is empty. | Check that the tray is loaded with media, in place, and secure. |
| | A document is printed with an overlay file which has been created by a non-magicolor 2530 DL driver. | Print the overlay file using a magicolor 2530 DL driver. |
| Printer resets or turns off frequently. | The power cord is not correctly plugged into the outlet. | Turn off the printer, confirm that the power cord is correctly plugged into the outlet, and then turn on the printer. |
| | A system error occurred. | Contact Technical Support with the error information. |

| Symptom | Cause | Solution |
|---|---|---|
| You are experiencing duplex problems. | Media or settings are not correct. | For autoduplexing, make sure that you have a duplex option installed. |
| | | Make sure that you are using correct media.<br>■ See “Media Specifications” on page 42.<br>■ Do not duplex custom-sized media, envelopes, labels, postcards, thick stock, or transparencies.<br>■ Make sure that you have not mixed media types in Tray 1. |
| | | Make sure the duplex option is installed and declared in the Windows printer driver (Device Options Setting tab). |
| | | In the printer driver (Layout/Double Sided), choose “Short Edge Binding” (flipped as on a clipboard) or “Long Edge Binding” (flipped as in a loose-leaf notebook). |
| | | For N-up on duplexed pages, choose Collate only in the driver’s Basic Tab. Do not set collation in the application. |
| With N-up on multiple copies, the output is incorrect. | Both the driver and the application have been set for collation. | For N-up on multiple copies, choose Collate only in the driver’s Basic Tab. Do not set collation in the application. |
| Booklet Left and Right Binding output is incorrect. | Both the driver and the application have been set for collation. | For Booklet Left Binding and Booklet Right Binding, choose Collate only in the driver’s Basic Tab. Do not set collation in the application. |

| Symptom | Cause | Solution |
|---|---|---|
| You hear unusual noises. | The printer is not level. | Place the printer on a flat, hard, level surface. |
| | The tray is not installed correctly. | Remove the tray that you are printing from and reinsert it completely into the printer. |
| | There is a foreign object stuck inside the printer. | Turn off the printer and remove the object. If you cannot remove it, contact Technical Support. |
| The web-based utility cannot be accessed. | The PageScope Web Connection Administrator's password is incorrect. | The PageScope Web Connection Administrator password has a 6-character minimum and a 16-character maximum. For details of the PageScope Web Connection administrator password, refer to the magicolor 2530 DL Reference Guide. |
| Media is wrinkled. 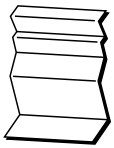 | The media is moist from humidity or having water spilled on it. | Remove the moist media and replace it with new, dry media. |
| | The media feed roller or fuser unit is defective. | Check them for damage. If necessary, contact Technical Support with the error information. |
| | Unsupported media (wrong size, thickness, type, etc.) is being used. | Use KONICA MINOLTA-approved media. See "Media Specifications" on page 42. |
| | Envelopes are being printed with the fuser separator levers in the plain paper position. | Before printing envelopes, place the fuser separator levers in the envelope position. |

# Solving Problems with Printing Quality

| Symptom | Cause | Solution |
|---|---|---|
| Nothing is printed, or there are blank spots on the printed page. 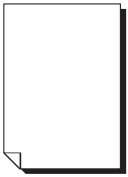 | One or more of the toner cartridges may be defective. | Remove the toner cartridges and check if any is damaged. |
| | The drum cartridge may be defective. | Remove the drum cartridge and check for damage. If it is damaged, replace it. |
| | The media is moist from humidity. | Adjust the humidity for media storage. Remove the moist media and replace it with new, dry media. |
| | The media set in the printer driver mismatches the media loaded in the printer. | Load the correct media in the printer. |
| | The power source does not match the printer specifications. | Use a power source with the proper specifications. |
| | Several sheets are being fed at the same time. | Remove the media from the tray and check for static electricity. Fan plain paper or other media (but not transparencies), and replace it in the tray. |
| | Media is not set properly in the tray(s). | Remove the media, tap it to straighten it out, return it to the tray, and realign the media guides. |
| Entire sheet is printed in black or color. | One or more of the toner cartridges may be defective. | Remove the toner cartridges and check for damage. If it is damaged, replace it. |
| | The drum cartridge may be defective. | Remove the drum cartridge and check for damage. If it is damaged, replace it. |

| Symptom | Cause | Solution |
|---|---|---|
| Image is too light; there is low image density.<br> | Laser lens is dirty. | Clean the laser lens. |
| | The media is moist from humidity. | Remove the moist media and replace with new, dry media. |
| | There is not much toner left in the cartridge. | Replace the toner cartridge. |
| | One or more of the toner cartridges may be defective. | Remove the toner cartridges and check for damage. If it is damaged, replace it. |
| | Media type is set incorrectly. | When printing envelopes, labels, postcards, thick stock, or transparencies, specify the appropriate media type in the printer driver. |
| Image is too dark.<br> | One or more of the toner cartridges may be defective. | Remove the toner cartridges and check for damage. If it is damaged, replace it. |
| | The drum cartridge may be defective. | Remove the drum cartridge and check for damage. If it is damaged, replace it. |
| Image is blurred; background is lightly stained; there is insufficient gloss of the printed image.<br> | One or more of the toner cartridges may be defective. | Remove the toner cartridges and check for damage. If it is damaged, replace it. |
| | The drum cartridge may be defective. | Remove the drum cartridge and check for damage. If it is damaged, replace it. |

| Symptom | Cause | Solution |
|---|---|---|
| The print or color density is uneven.<br> | One or more of the toner cartridges may be defective or low. | Remove the toner cartridges and check for damage. If it is damaged, replace it. |
| | The drum cartridge is defective. | Remove the drum cartridge and check for damage. If it is damaged, replace it. |
| | The printer is not level. | Place the printer on a flat, hard, level surface. |
| Irregular print or mottled image appears.<br> | The media is moist from humidity. | Adjust the humidity in the media storage area.<br>Remove the moist media and replace it with new, dry media. |
| | Unsupported media (wrong size, thickness, type, etc.) is being used. | Use KONICA MINOLTA-approved media. See “Media Specifications” on page 42. |
| | One or more of the toner cartridges may be defective. | Remove the toner cartridges and check for damage. If it is damaged, replace it. |
| | The drum cartridge is defective. | Remove the drum cartridge and check for damage. If it is damaged, replace it. |
| | The fuser separator levers are adjusted for envelope printing. | Return the fuse separator levers to the plain paper setting. |
| There is insufficient fusing or the image comes off when rubbed.<br> | The media is moist from humidity. | Remove the moist media and replace it with new, dry media. |
| | Unsupported media (wrong size, thickness, type, etc.) is being used. | Use KONICA MINOLTA-approved media. See “Media Specifications” on page 42. |
| | Media type is set incorrectly. | When printing envelopes, labels, postcards, thick stock, or transparencies, specify the appropriate media type in the printer driver. |
| | The fuser separator levers are adjusted for envelope printing. | Return the fuse separator levers to the plain paper setting. |

| Symptom | Cause | Solution |
|---|---|---|
| There are toner smudges or residual images. | One or more of the toner cartridges are defective or installed incorrectly. | Remove the toner cartridges and check for damage. If it is damaged, replace it. |
| | The fuser separator levers are adjusted for envelope printing. | Return the fuse separator levers to the plain paper setting. |
| There are toner smudges on the back side of the page (whether or not it has been duplexed). 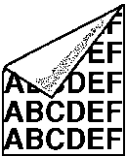  | The media transfer roller is dirty. | Clean the media transfer roller. |
| | | If you think the transfer roller should be replaced, contact Technical Support with the error information. |
| | The media path is dirty with toner. | Print several blank sheets and the excess toner should disappear. |
| | One or more of the toner cartridges are defective. | Remove the toner cartridges and check for damage. If it is damaged, replace it. |
| | The drum cartridge is defective. | Remove the drum cartridge and check for damage. If it is damaged, replace it. |
| Abnormal areas (white, black, or color) appear in a regular pattern. 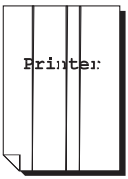  | The laser lens is dirty. | Clean the laser lens. |
| | A toner cartridge may be defective. | Remove the toner cartridges with the color causing the abnormal image. Replace it with a new toner cartridge. |
| | The drum cartridge is defective. | Remove the drum cartridge and check for damage. If it is damaged, replace it. |

| Symptom | Cause | Solution |
|---|---|---|
| Image defects. | The laser lens is dirty. | Clean the laser lens. |
| | A toner cartridge may be leaking. | Remove the toner cartridges and check for damage. If it is damaged, replace it. |
| | A toner cartridge may be defective. | Remove the toner cartridge with the color causing the abnormal image. Replace it with a new toner cartridge. |
| | The drum cartridge may be defective. | Remove the drum cartridge and check for damage. If it is damaged, replace it. |
| Lateral lines or bands appear on image. 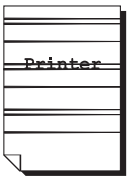 | The printer is not level. | Place the printer on a flat, hard, level surface. |
| | The media path is dirty with toner. | Print several sheets and the excess toner should disappear. |
| | One or more of the toner cartridges may be defective. | Remove the toner cartridges and check for damage. If it is damaged, replace it. |
| | The drum cartridge is defective. | Remove the drum cartridge and check for damage. If it is damaged, replace it. |
| Colors look drastically wrong. | One or more of the toner cartridges may be defective. | Remove the toner cartridges and verify that the toner is distributed evenly on each cartridge roller, and reinstall the toner cartridges. |
| | One or more of the toner cartridges may be low or empty. | Check the control panel for an *X* `TONER LOW` or `TONER EMPTY` *X* message. If necessary, replace the specified toner cartridge. |

| Symptom | Cause | Solution |
|---|---|---|
| Colors are not registering properly; colors are mixed or have page-to-page variation. | The drum cartridge is not correctly seated. | Remove the drum cartridge and reinstall it. |
| | One or more of the toner cartridges may be defective. | Remove the toner cartridges and check for damage. If it is damaged, replace it. |
| | The media is moist from humidity. | Remove the moist media and replace it with new, dry media. |
| The color has a poor reproduction or has poor color density. | The drum cartridge may be defective. | Remove the drum cartridge and check for damage. If it is damaged, replace it. |

If the problem is not resolved, even after all of the above have been performed, contact Technical Support with the error information.

For contact information, refer to the Need Assistance Sheet.

# Status, Error, and Service Messages

Status, error, and service messages are displayed in the control panel message window. They provide information about your printer and help you locate many problems. When the condition associated with a displayed message has changed, the message is cleared from the window.

## Standard Status Messages

| This message... | means... | do this... |
|---|---|---|
| CALIBRATING | After replacing a toner cartridge, or after rebooting your printer after environmental changes, your printer automatically pauses to do an Auto-Image Density Control (AIDC) cycle. This process is provided to make reliable printer operation with optimum output quality possible. | No action needed. |
| CANCELLING JOB | The job is being cancelled. | |
| ENERGY SAVER | The printer is in Energy Saver mode to reduce power consumption during periods of inactivity. When a print job is received, the printer returns to normal power within 35 seconds. | |
| IMAGING | The image from the digital camera is being rendered. | |
| PRINTING | The printer is printing. | |
| READY | The printer is on and ready to receive data. | |
| PROCESSING | The printer is processing data. | |
| WARMING UP | The printer is warming up. | |

## Error Messages (Warning)

| This message... | means... | do this... |
|---|---|---|
| DRUM LOW | The drum cartridge is near the end of its life. | Prepare a new drum cartridge. |
| DRUM CARTRIDGE END OF LIFE | The drum cartridge has reached the end of its life. | Replace the drum cartridge. |
| INCORRECT CART. *X* | The *X* toner cartridge is an unapproved type. | Install a KONICA MINOLTA toner cartridge of the appropriate type (AM, EU, AP, GC or TW), see Page 69. |
| SIZE MISMATCH | Size mismatch occurs when AUTO CONTINUE (Engine menu) is set to ON. | Load the correct media size. |
| TONER EMPTY *X* | The *X* toner cartridge is empty. (Appears when ENGINE/TONER EMPTY/CONTINUE is set) | Replace the toner cartridge. |
| *X* TONER LOW | The *X* toner cartridge is low and should be replaced within 200 pages at 5% coverage of letter/A4 pages. | Prepare the specified color toner cartridge. |
| TRAY *X* EMPTY | Tray *X* (Tray 1, 2) was specified with the printer driver for printing, but Tray *X* is empty. | Load media into the specified tray. |
| NO GENUINE TONER X | The x toner cartridge has been found to be non-genuine. | Install a genuine KONICA MINOLTA toner cartridge of the appropriate type (AM, EU, AP, GC or TW), see Page 69. |

## Error Messages (Operator Call)

| This message... | means... | do this... |
|---|---|---|
| COVER OPEN<br>DUPLEX | Duplex cover is open. | Close the duplex cover. |
| COVER OPEN<br>FRONT | The printer's front cover is open. | Close the front cover. |
| DRUM CARTRIDGE<br>NOT ATTACHED | The drum cartridge is not installed. | Install the drum cartridge. |
| DRAWER OPEN<br>TRAY 2 | Tray 2 is not installed, or not fully inserted into Tray 2. | Insert the tray into the media feed unit. |
| DUPLEX OPTION<br>NOT ATTACHED | Duplex printing was specified with the printer driver, but the duplex option is not installed. | Install the duplex option. |
| ERROR<br>MEMORY OVERFLOW | The printer has received more data than can be processed with its internal memory. | Turn the printer off, and then, after a few seconds, turn it on again. Decrease the amount of data to be printed (for example, by decreasing the resolution), and then try printing again.<br>If that doesn't solve the problem, install an optional memory module. |
| ERROR<br>VIDEO UNDERRUN | The amount of data to be printed exceeds the printer's internal data transmission speed. | Turn the printer off, and then, after a few seconds, turn it on again. Decrease the amount of data to be printed (for example, by decreasing the resolution), and then try printing again. |

| This message... | means... | do this... |
|---|---|---|
| MEDIA JAM<br>DUPLEX LOWER | Media has misfed in the duplex option. | Locate and remove the misfeed. |
| MEDIA JAM<br>DUPLEX UPPER | Media has misfed in the duplex option. | |
| MEDIA JAM<br>FUSER | | |
| MEDIA JAM<br>TRANSFER ROLLER | Media has misfed in the transfer roller area. This type of misfeed means that the media did not make it to the paper exit area. | |
| MEDIA JAM<br>TRAY *X* | Media has misfed while being pulled from the specified tray (*X*). | |
| PUT MEDIA : TRAY 1<br>"MEDIA" | The media type set in the printer driver is different from the type of media loaded into Tray 1. | Load the correct media type into Tray 1. |
| PUT MEDIA : TRAY *X*<br>"SIZE" | The media size set in the printer driver is different from the size of media loaded. | Load the correct media size into the specified tray. |
| SIZE/TYPE ERROR | Unsupported media (wrong size, thickness, type, etc.) is being used. | Load the correct media size and type. |
| SIZE/TYPE ERROR<br>DUPLEX | Media not compatible with duplex printing. | Use the correct media size and type when duplexing. |
| TONER LIFE END<br>*X* | The *X* toner cartridge is empty.<br>(Appears when ENGINE/TONER EMPTY STOP is set) | Replace the toner cartridge. |

| This message... | means... | do this... |
|---|---|---|
| *X* TONER<br>NOT INSTALLED | The *X* toner cartridge is not installed, or an unapproved toner cartridge is installed. | Install a correct KONICA MINOLTA toner cartridge. |
| TRAY 2<br>NOT ATTACHED | Tray 2 was specified with the printer driver for printing, but Tray 2 is not installed. | Stop the print job and change the printer driver setting. If necessary, install Tray 2. |

## Service Messages

These messages indicate a more serious fault that can only be corrected by a customer service engineer. If one of these messages appears, turn the printer off, then turn it on again. If the problem persists, contact your local vendor or authorized service provider.

| This service message... | means... | do this... |
|---|---|---|
| ERROR<br>AIDC SENSOR | AIDC sensor error. | Contact Technical Support with the error information. |
| ERROR<br>COMMUNICATION | A communication error occurred in the USB or Ethernet interface. | Check that the interface cable is properly connected to the printer.<br>If the error continues to appear even though the cables are correctly connected, contact Technical Support. |
| ERROR<br>CONTROLLER | Controller internal error. | Contact Technical Support with the error information. |
| ERROR<br>ENGINE INTERFACE | A communication error occurred with the engine controller. | Contact Technical Support with the error information. |
| FATAL ERROR<br>CODE:*XX* | An error has been detected with the item indicated "*XX*" in the service message. | Reboot the printer. This often clears the service message, and printer operation can resume.<br>If the problem persists, contact Technical Support. |

# 10 Installing Accessories

# Introduction

## Note

**Use of accessories not manufactured or supported by KONICA MINOLTA will void your warranty.**

*This chapter provides information about the following accessories.*

| | |
|---|---|
| **Dual In-Line Memory Module (DIMM)** | Increases the printer's memory to assist with the printing of complex graphics and large duplexed pages. |
| **Duplex Option** | Auto duplexing |
| **Tray 2** | 500-sheet tray included |
| **Dust Cover** | The dust cover is a standard feature in Europe, the Americas and Taiwan, but an optional accessory in other areas. |

## Note

**Installing accessories always requires that the printer and accessories are turned off and unplugged during installation.**

*For details on the available options, refer to printer.konicaminolta.com.*

# Antistatic Protection

## Note

**Before opening and handling the dual in-line memory module (DIMM), first touch a metal part of the printer to avoid an electrostatic charge building up. When the DIMM is taken out of its conductive bag, hold it by its edges to avoid touching the electronic circuits. When handling the DIMM, be sure to place it on an anti-static mat or a piece of aluminum foil.**

# Dual In-Line Memory Module (DIMM)

A dual in-line memory module (or DIMM) is a compact circuit board with surface-mount memory chips.

Your printer comes with 64 MB SDRAM printer memory on board. However, you can upgrade to a maximum of 576 MB of RAM through the installation of an additional unbuffered SDRAM DIMM. Your printer comes with one free DIMM slot.

### DIMM's Specifications

| | |
|---|---|
| **Capacity** | 128 MB, 256 MB, 512 MB |
| **Module Type** | unbuffered NonECC |
| **Pin Count** | 168-pin |
| **Configuration** | 16M x 64bit, 32M x 64bit, 64M x 64bit |
| **Data Rate** | 100 MHz, 133 MHz |
| **CAS Latency** | 3 |
| **Voltage** | 3.3 V |

*Your printer recognizes only single-sided DIMMs. If you install a double-sided DIMMs, the printer may recognize only half of the memory available on that DIMMs.*

### Recommended DIMMs

1) 128 MB DIMM - CT16M64S4D7E(Crucial)

2) 256 MB DIMM - VS133-S256/HB(Buffalo)

3) 512 MB DIMM - 0286-0005(Centon)

*For details on the available DIMMs, refer to printer.konicaminolta.com.*

**Required Memory during Printing**

| | **600 x 600 dpi<br>1200 x 600 dpi** | **2400 x 600 dpi<br>2400 x 600 dpi (Line art)** |
|---|---|---|
| **Monochrome (Simplex/Duplex)** | 64 MB | 64 MB |
| **Full color (Simplex)** | 64 MB | 64 MB |
| **Full color (Duplex)** | 128 MB | 256 MB |

## Installing a DIMM

### Note

**It's very important to protect the printer controller board and any associated circuit boards from electrostatic damage. Before performing this procedure, review the antistatic caution on Page 126. In addition, always handle circuit boards by the edges only.**

1 Turn off the printer and disconnect the power cord and interface cables.

*If the duplex option is installed, remove it.*

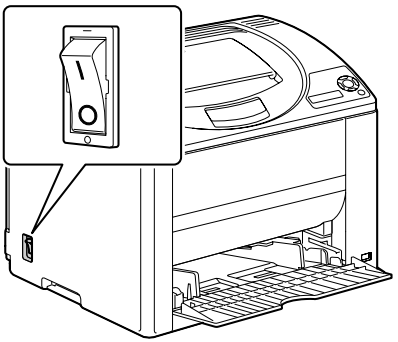

2 Using a screwdriver, remove the screw on the back of the printer.

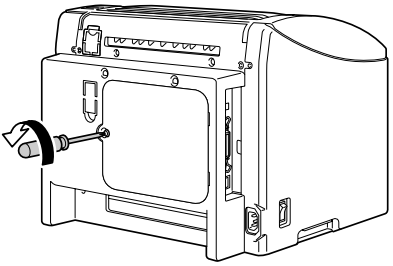

3 Remove the rear panel.

*Since there are two hooks on the right side of the panel, remove the rear panel by slightly pulling the left side of the panel toward you, then sliding the panel off to the left.*

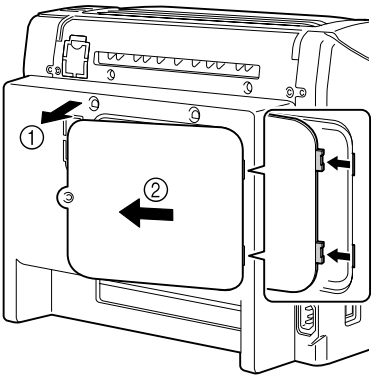


4 Insert the new DIMM straight into the DIMM connector until the latches snap into the locked position.

*Observe the keyed side of the DIMM to align it with the connector. If you cannot snap the DIMM into place, do not force it. Reposition it, making sure that the DIMM is seated completely in the connector.*

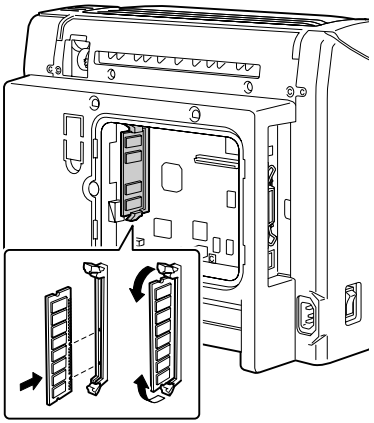

5 Reinstall the panel and tighten the screw.

6 Reconnect all interface cables.

7 Reconnect the power cord, and turn on the printer.

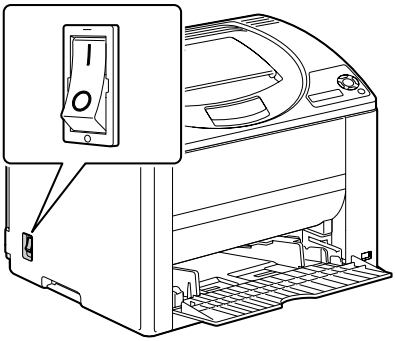

8 Print a configuration page from the special pages menu (`SPECIAL PAGES/PRINT CONFIG PAGE`) and verify that the total size of the RAM installed in your printer is listed.

# Duplex Option

Duplex (Double-Sided) printing can be performed automatically with the duplex option and enough memory installed. See “Required Memory during Printing” on page 128.

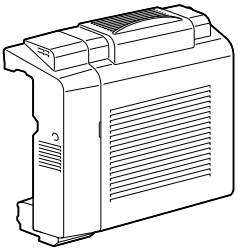

## Installing the Duplex Option

1 Turn off the printer.

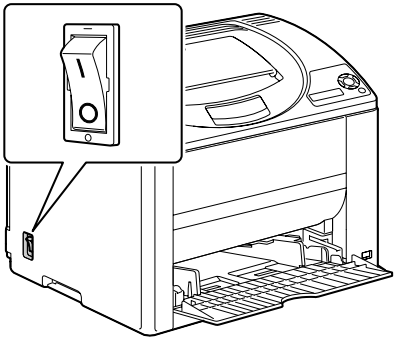

2 Remove the two knockout plates and the tape.

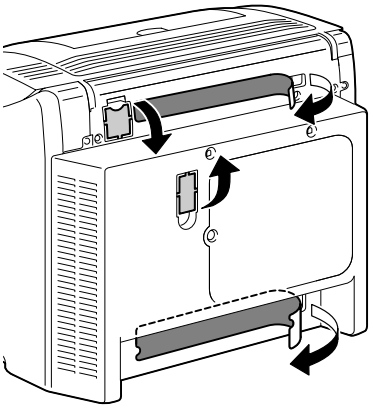

3 Prepare the duplex option.

*Before installing the duplex option, open the duplex cover and check that the knob is positioned vertically. After checking the knob, close the cover.*

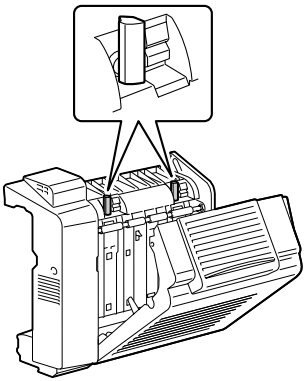

4 Install the duplex option.

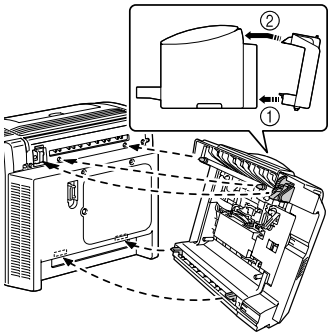


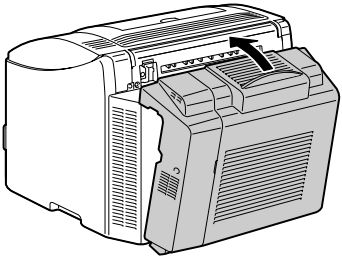

5 Open the cover of the duplex option.

*Since the duplex option is not yet secured to the printer, hold the duplex option in place when opening its cover.*

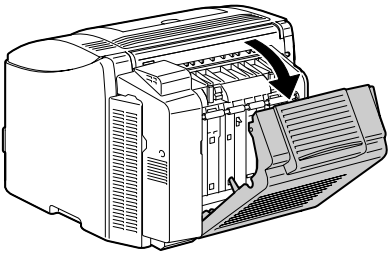

6 While pushing in the knobs, turn them clockwise until they are horizontal.
The duplex option is secured in place.

*Make sure that both knobs are securely locked.*

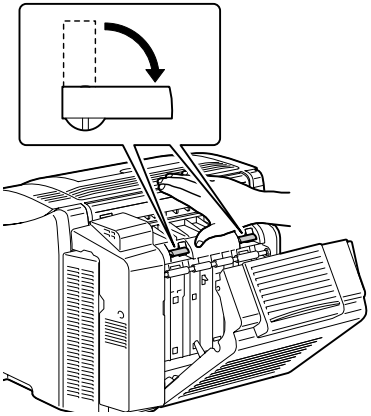

7 Close the duplex cover.

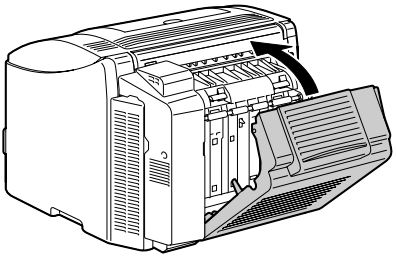

8 Declare the duplex in the Windows printer driver (Device Options Setting tab, see Page 8).

# Tray 2

If Tray 2 is installed, the amount of paper available can be increased.

Up to 500 sheets of A4/Letter-size paper can be loaded.

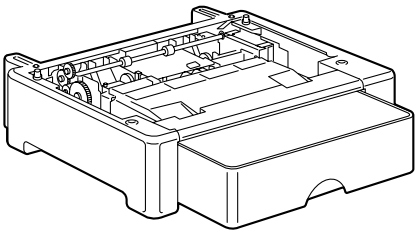

## Installing Tray 2

### Note

**Since consumables are installed in the printer, be sure to keep the printer level when moving it in order to prevent accidental spills.**

1 Turn off the printer and disconnect the power cord and interface cables.

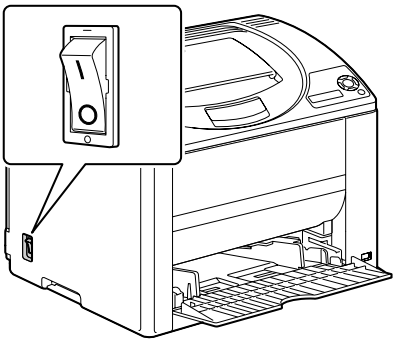

2 Prepare Tray 2.

*Be sure to place Tray 2 on a level surface.*

3 Lift the printer and place it on top of Tray 2, making sure that the positioning pins on Tray 2 correctly fit into the holes in the bottom of the printer.

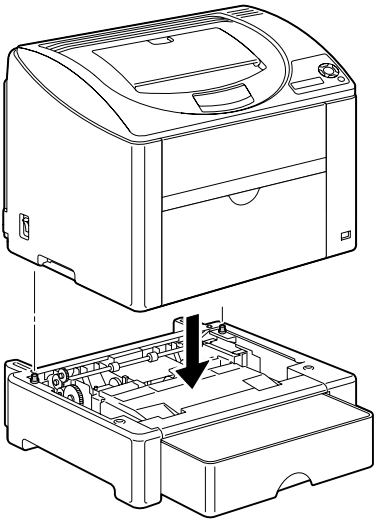

4 Declare Tray 2 in the Windows printer driver (Device Options Setting tab, see Page 8).

# Dust Cover

When the dust cover is attached to Tray 1, the media is protected from dust, and operating noises from printing are reduced. We recommend that the dust cover remain attached when this printer is used.

*Depending on the sales region, the dust cover is not included with this printer. If necessary, purchase this part from your sales representative.*

## Installing the Dust Cover

1 Open Tray 1.

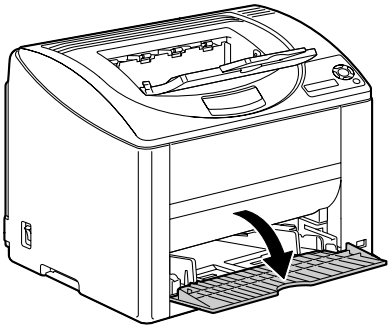

2 Install the dust cover tray.

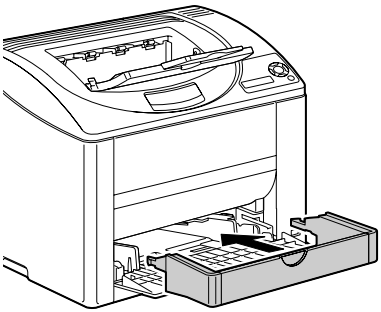

3 Attach the lid to the dust cover tray.

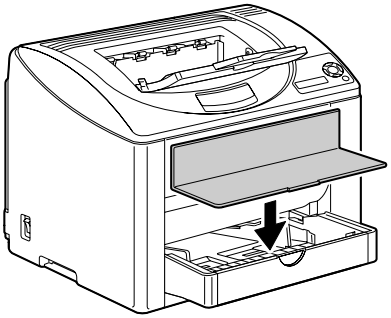

## Loading Media in Tray 1 with the Dust Cover Installed

1 Remove the lid from the dust cover, and then open the front panel of the dust cover tray.

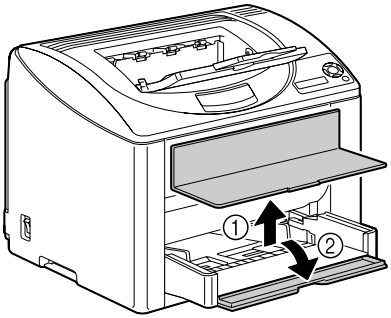


2 Slide the media guides to provide more space between them.

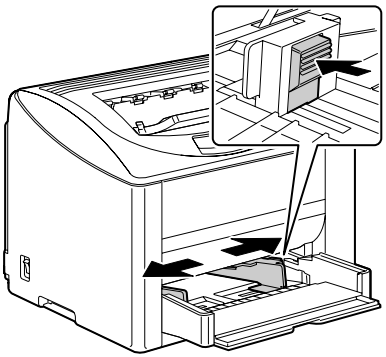

3 Load the media face up in the tray.

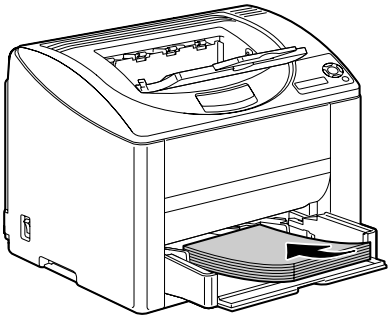

*Do not load above the ▼ mark.*
*Do not load more than 10 envelopes or 50 sheets of labels, postcards, thick stock, or transparencies at one time.*

4 Slide the media guides against the edges of the media.

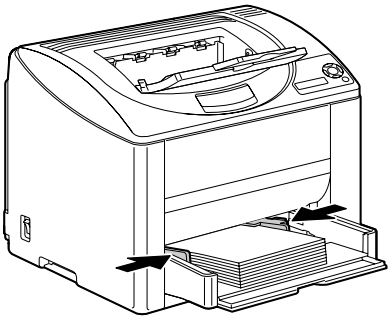

5 Close the front panel of the dust cover tray, and then reattach the lid.

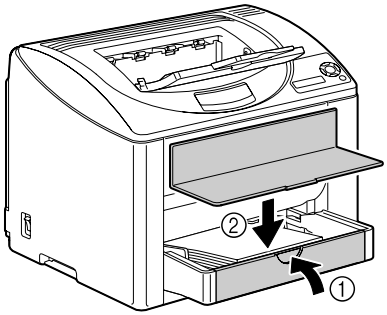

# *Appendix* A

# Safety Specifications

| Printer | | |
|---|---|---|
| Safety standards | U.S. model | UL 60950-1, CSA C22.2 No. 60950-1-03 |
| | European model | EU Directive 73/23/EEC<br>EU Directive 93/68/EEC<br>EN 60950-1 (IEC 60950-1) |
| | China model | GB 4943 |
| EMC standards | U.S. model | FCC part 15 subpart B class B<br>ICES-003 |
| | European model | EU Directive 89/336/EEC<br>EU Directive 93/68/EEC<br>EN 55022 (CISPR Pub. 22) class B<br>EN 61000-3-2<br>EN 61000-3-3<br>EN 55024 |
| | China model | GB 9254 class B, GB 17625.1 |
| | Australian model | AS/NZS CISPR22 class B |

# Technical Specifications

## Printer

| | |
|---|---|
| Type | Desktop full color laser beam printer |
| Printing system | 2 laser diodes and polygon mirror |
| Developing system | Mono-component toner developing |
| Resolution | 2400 dpi × 600 dpi,<br>1200 dpi × 600 dpi or 600 dpi × 600 dpi |
| First print | Simplex<br>Monochrome: 12.0 seconds for A4, Letter (plain paper)<br>Full color: 21.0 seconds for A4, Letter (plain paper)<br>Duplex<br>Monochrome: 24.0 seconds for A4, Letter (plain paper)<br>Full color: 33.0 seconds for A4, Letter (plain paper) |

| | |
|---|---|
| Print speed | Simplex<br>Monochrome: 20.0 pages per minute for A4, Letter (plain paper)<br>Full color: 5.0 pages per minute for A4, Letter (plain paper)<br>Duplex<br>Monochrome: 11.4 pages per minute for A4, Letter (plain paper)<br>Full color: 5.0 pages per minute for A4, Letter (plain paper) |
| Warm-up time | 100 V/120 V: 54 seconds or less<br>220 to 240 V: 59 seconds or less |
| Media sizes | Tray 1<br>Paper width: 92 to 216 mm (3.6 to 8.5")<br>Paper length:<br>Plain Paper/Letterhead:<br>198 to 356 mm (7.8 to 14.0")<br>Label/Postcard/Envelope/Thick Stock/Transparency: 148 to 297 mm (5.9 to 11.7")<br>Tray 2 (Optional)<br>A4/Letter |
| Paper/Media | • Plain paper (60 to 90 g/m$^2$; 16 to 24 lb bond)<br>• Recycled paper (60 to 90 g/m$^2$; 16 to 24 lb bond)<br>• Transparency<br>• Envelope<br>• Thick Stock (91 to 163 g/m$^2$; 25 to 43 lb)<br>• Postcard<br>• Letterhead<br>• Label sheet<br>• Glossy |
| Input capacity | Tray 1<br>Plain paper: 200 sheets<br>Envelope: 10 envelopes<br>Label/Postcard/Thick Stock/Transparency/Letterhead/Glossy: 50 sheets<br>Tray 2 (Optional)<br>Plain paper: 500 sheets |
| Output capacity | Output tray: 200 sheets (A4, Letter) |
| Operating temperature | 10 to 35°C (50 to 95°F) |
| Operating humidity | 15 to 85% |

| | |
|---|---|
| Power supply | 110 to 127 V, 50 to 60 Hz<br>220 to 240 V, 50 to 60 Hz |
| Power consumption | 100 V/120 V: 1100 W<br>220 to 240 V: 1100 W<br>Energy Saver Mode: 10 W or less |
| Amperage | 110 to 127 V: 11 A or less<br>220 to 240 V: 7 A or less |
| Acoustic Noise | Printing: 52 dB or less<br>Standby: 35 dB or less |
| External dimensions | Height: 349 mm (13.7")<br>Width: 430 mm (16.9")<br>Depth: 395 mm (15.6") |
| Weights | Printer:<br>17.1 kg (37.7 lb) (excluding TC, DC and the dust cover)<br>20.4 kg (44.9 lb) (including TC, DC and the dust cover)<br>Toner cartridge:<br>Standard in-box cartridge = 0.58 kg (1.28 lb) (Y, M, C, K)<br>Replacement cartridge (with toner roller cover)=<br>Standard-capacity: 0.63 kg (1.39 lb) (Y, M, C)<br>High-capacity: 0.70 kg (1.54 lb) (Y, M, C, K) |
| Interface | USB 2.0 and USB 1.1 compliant, 10Base-T/ 100Base-TX (IEEE 802.3) Ethernet |
| Standard memory | 64 MB |

## Consumable Life Expectancy Chart

| Item | Average Life Expectancy (in Simplex Pages) |
|---|---|
| **Toner cartridge** | **Standard in-box Cartridge =**<br>1,500 pages (Y, M, C, K)<br>**Replacement Cartridge =**<br>Standard-capacity: 1,500 pages (Y, M, C)<br>Standard-capacity (120 V printers only): 1,500 pages (K)<br>High-capacity: 4,500 pages (Y, M, C, K) |
| **Drum cartridge** | **Monochrome:**<br>45,000 pages (Continuous)<br>10,000 pages (1 page per job)<br>**Full color:**<br>11,250 pages (Continuous)<br>7,500 pages (1 page per job) |

*The values shown for the toner cartridge and drum cartridge indicate the number of pages for simplex printing using A4/Letter-size media with 5% coverage.*
*The actual life may differ (be shorter) depending on the printing conditions (coverage, paper size, etc.), differences in the printing method, such as continuous printing or intermittent printing (when print jobs of one page are often printed), or the type of paper used, for example, thick paper. In addition, the life will be affected by the temperature and humidity of the operating environment.*

# Our Concern for Environmental Protection

As an ENERGY STAR® Partner, we have determined that this machine meets the ENERGY STAR Guidelines for energy efficiency.

## What is an ENERGY STAR product?

An ENERGY STAR product has a special feature that allows it to automatically switch to a “low-power mode” after a period of inactivity. An ENERGY STAR product uses energy more efficiently, saves you money on utility bills and helps protect the environment.

# Index


## A

**Accessories** 126
  DIMMs 127
  Duplex option 130
  Dust cover 135
  Tray 2 133
**Antistatic protection** 126

## B

**Basic tab** 12
**Booklet binding** 111

## C

**Configuration menu** 25
**Consumables**
  Toner cartridge 68
**Control panel** 22

## D

**Direct print** 35, 37
**Dual in-line memory module** 127
**Duplexing** 63
  Duplex option 130
**Dust cover** 135

## E

**Electrostatic discharge** 126
**Envelope** 46
**Error messages** 120

## G

**Glossy** 50

## I

**Imageable area** 51

## L

**Labels** 47
**Layout tab** 12
**Letterhead** 48
**Loading media** 52

## M

**Maintenance** 82
**Media**
  Clearing misfeeds 96
  Imageable area 51
  Loading 52
  Path 96
  Preventing misfeeds 95
**Media misfeed**
  Duplex option 103
**Media path** 96
**Media storage** 65
**Media type**
  Envelope 46
  Glossy 50
  Labels 47
  Letterhead 48
  Plain paper 44
  Postcard 48
  Thick stock 45
  Transparency 49
**Message window** 22
**Messages** 119
**Misfeed problems** 105
  Clearing 96
  Media path 96
  Preventing 95

## N

**N-up** 111

## O

**Output tray** 64
**Overlay printing** 110
**Overlay tab** 12

## P

**Page margins** 51
**PageScope Web Connection** 112
**Plain paper** 44
**Postcard** 48
**Preventing media misfeeds** 95
**Print quality** 113
**Printer**
  Parts 3
**Printer driver** 10
  Setting 9

## Q

**Quality tab** 13

## S

**Service messages** 124
**Static electricity discharge** 126
**Status display** 16
  Closing 17
  Opening 16
  Using 16

## T

**Thick stock** 45
**Transparency** 49
**Tray 2** 133
**Troubleshooting** 93
  Duplexing 111
  Media misfeed 105
  Nothing is printed 113
  Printer resets 110
  Status, error, and service messages 119

## V

**Version tab** 13

## W

**Watermark tab** 12
**Wrist strap for antistatic protection** 126